Aug. 7, 1934. P. T. FARNSWORTH 1,969,399

ELECTRON MULTIPLIER

Filed March 3, 1930

Fig. 1.

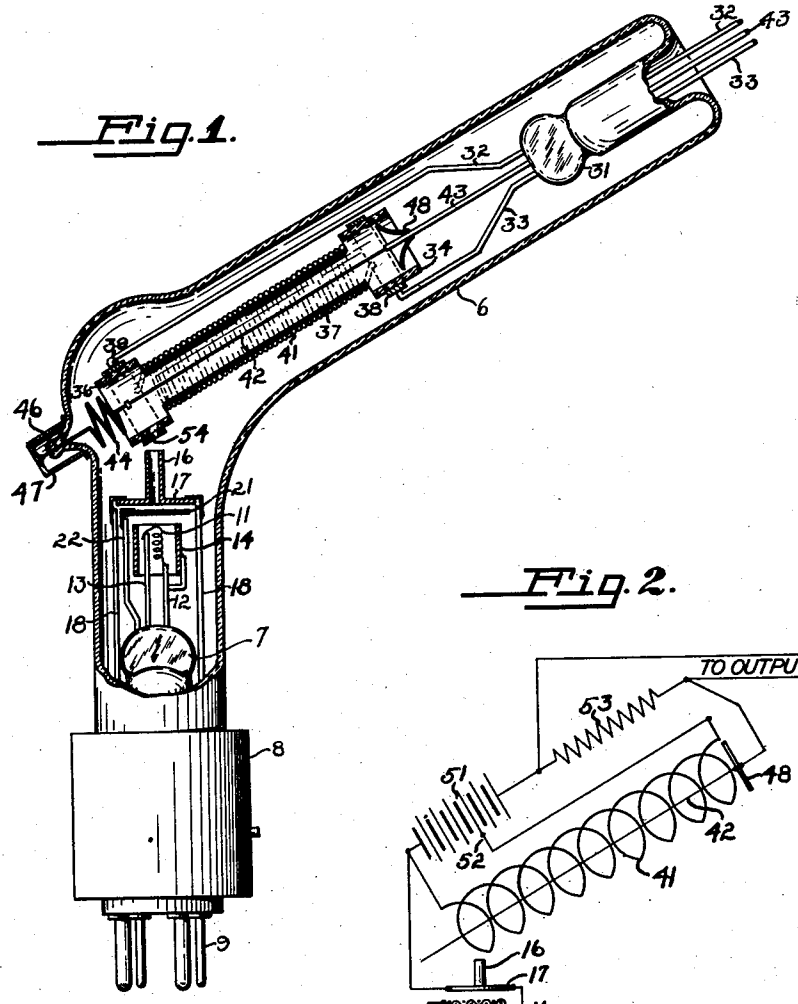

Fig. 2.

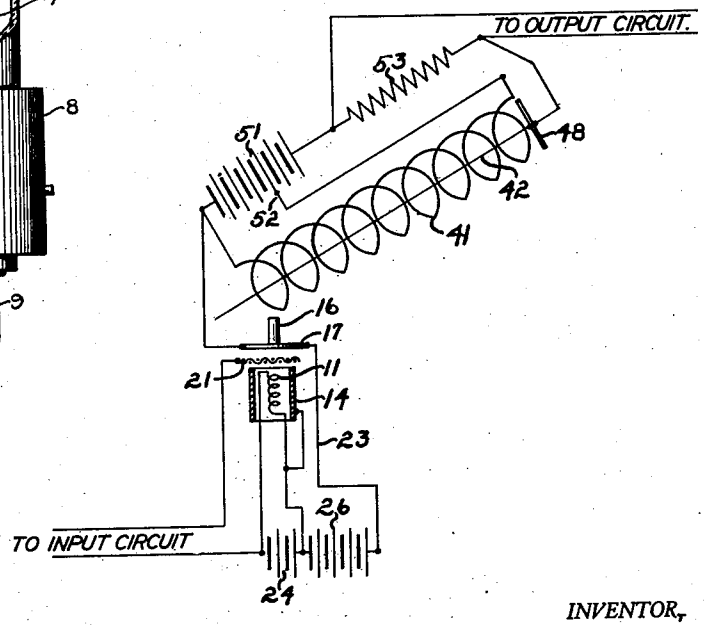

INVENTOR,
PHILO T. FARNSWORTH.
BY Donald K. Lippincott
ATTORNEY.

Patented Aug. 7, 1934 1,969,399

UNITED STATES PATENT OFFICE

1,969,399

ELECTRON MULTIPLIER

Philo T. Farnsworth, San Francisco, Calif., assignor to Television Laboratories, Inc., San Francisco, Calif., a corporation of California

Application March 3, 1930, Serial No. 432,602

10 Claims. (Cl. 250—27.5)

REISSUED

My invention relates to electronic discharge apparatus, and its broad purpose is to provide a means of increasing the intensity of an electron stream.

Among the objects of my invention are: First, to provide a device for multiplying the electrons available in an electron discharge device, thereby increasing the available current and decreasing the effective impedance; second, to provide an electron multiplying means which is substantially linear in its characteristics, and therefore capable of substantially distortionless amplification; third, to provide an electron multiplying device which is applicable to various types of apparatus, such as photo-electric cells, electronic relays, amplifiers, and the like; fourth, to provide an electron multiplier which is capable of producing practically unlimited amplification; fifth, to provide an electron multipler which may be used as an amplifier which does not introduce interference noises; and sixth, to provide a new type of electronic amplification.

My invention possesses numerous other objects and features of advantage, some of which, with the foregoing, will be set forth in the following description of my invention. It is to be understood that I do not limit myself to this disclosure of species of my invention, as I may adopt variant embodiments thereof within the scope of the claims.

In general terms, the electron multiplier in my invention comprises a pair of opposed surfaces which are adapted to liberate electrons by secondary emission. Means are provided for causing a potential drop along these surfaces, so that a graduated electrostatic field is formed between them. The electron stream which is to be multiplied is directed so as to be intercepted by one of these surfaces, thereby causing a secondary emission of electrons. These secondary electrons are accelerated by the graduated field between the surfaces, causing impacts, first with one surface and then with the other, each impact causing the release of a plurality of electrons resulting in a cumulative electron flow. The final electronic flow is proportional to the intensity of the original electron stream, the voltage of the graduated field, and the length of the path in which the repeated impacts and their resultant secondary emissions occur.

Referring to the drawing:

Figure 1 is a view, partly in elevation and partly in axial section, of an electron discharge device embodying a form of my invention.

Figure 2 is a schematic diagram of the device of Figure 1, showing the principal circuits associated therewith.

In detail, the apparatus shown in the drawing comprises an evacuated envelope 6, which in this case is in the form of a cylindrical glass tube which is bent at an obtuse angle. The lower end of the tube is sealed to a stem or press 7 of conventional type which supports the apparatus for producing a modulated electron stream. This end of the tube is secured for convenience to a radio tube base 8 of the ordinary form, the leads which are sealed to the stem being connected to the pins 9 in the usual manner.

Within the tube, a filament 11 is supported by the wires 12 and 13 which are sealed thru the stem 7, and the filament is surrounded by a cylindrical shield 14 which is connected to the support 12, and serves to concentrate the electron flow from the filament.

An anode comprising a tubular portion 16 and a circular flange 17 is mounted upon the support 18 co-axially with the shield. As is shown by Figure 2, a strong positive potential is imposed upon the anode, and hence the electrons liberated by the filament are accelerated and a definite proportion of them is projected outwardly thru the tube 16. The stream of electrons thus produced is modulated by a control electrode 21 comprising a gauze screen carried by a support 22 and interposed between the anode and the shield 14.

It will be understood that in the structure shown a signal to be amplified is impressed between filament 11 and grid 21 from an input circuit in accordance with the ordinary amplifier practice, and that this signal modulates the electron flow to the anode and hence the flow escaping thru the tubular portion 16 in like proportion. The device differs from the ordinary amplifier in that the output circuit is not connected between the anode and filament, which are joined through battery 26 by a lead 23. The usual filament battery 24 and anode battery 26, are provided.

The apparatus thus far described is merely one method of producing a modulated electron stream, and is not the essential part of this invention. It may be thought of as an electron gun, and its place may be taken by a photo-electric cell, or other type of apparatus producing an electronic discharge which it is desired to multiply.

The electron multiplier proper is carried by a stem 31 which is sealed into the upper end of the envelope 6. Extending thru the stem are two supporting lead wires 32 and 33, between

which a hollow resistor is connected. In the present instance, this resistor comprises a glass form having annular end portions 34 and 36 joined by a pair of opposite connecting bars 37. This form may be made by cutting away opposite segments from the central portion of a glass tube.

The form is supported by a conducting ring 38, connected to the lead 33, and another conducting ring 39, connected and supported by the lead 32. Between the rings 38 and 39 a coil 41 is wound upon the form. This coil is greatly exaggerated in the drawing, being wound of extremely fine wire having as high resistance as it is practical to secure. In the device pictured, using fine filament wire wound five hundred turns to the inch, a resistance of approximately 50,000 ohms was obtained with a resistor approximately three inches long. These figures are illustrative merely, optimum performance being obtained with maximum resistance.

A filamentary electrode 42 extends axially of the resistor and connects with a lead 43 sealed thru the press 30. The electrode is tensioned by a spring 44, which connects thru the seal 46 to a terminal 47. The electrode 42 is preferably coated with a metal adapted to liberate electrons by secondary emission, such as thorium or barium.

After the device is evacuated, and before it is put into active operation, a current is passed thru the filament between the terminals 47 and 43, raising it to incandescence and vaporizing the material from its surface, which is deposited as a coating upon the inner surface of the resistor. I have found that a very active coating is formed in this manner. For example, using thorium as a secondary emitter, I have obtained one secondary electron for each 45 volts of impact potential of a primary electron, and using barium, I have obtained one secondary electron for each 33 volts of impact potential of the primary electron.

Egress of electrons from the upper end of the resistor is practically blocked by means of a small shield 48, secured to the lead 43.

Referring again to Figure 2, a potential is applied across the resistor 41 by means of a battery 51. The resistor connects to a tap 52 on this battery, while the electrode 42 connects thru a resistor 53 to the positive terminal of the battery.

As is shown by Figure 1, an aperture 54, in line with the tubular anode, permits the electron stream to enter the hollow resistor and strike within it upon the surface which has been sensitized for secondary emission. The stream strikes with a velocity obtained by falling thru a potential of preferably several hundred volts, and each of the primary electrons therefore, liberates a number of secondaries.

These secondaries are emitted with small random velocity, and are subjected to the action of an electrostatic field resulting first, from the potential between the resistor 41 and the filamentary electrode 42, and second from the fall of potential along the resistor itself. The result of the combined action of these two fields is to accelerate the secondary electron transversely of the resistor. Due to its small superficial area, the electrode 42 intercepts very few of these electrons, which proceed at decreasing speed across the interior of the resistor and hit the opposite surface with a velocity which is substantially that due to the potential longitudinal of the resistor thru which they have fallen.

Here their impact again causes a release of secondary electrons in increased numbers, and the action is repeated, with an increase in the intensity of the electron cloud at each impact or "reflection". When the electron stream has passed the entire length of the resistor 41, the electrons collect upon the shield 48. Thence they return to the battery 51 thru the resistor 53, causing a potential drop therein which may be utilized in any desired type of output circuit connected across the resistor.

The amount of electron multiplication obtained with this device is a function of the potential thru which the electrons fall between impacts, and of the number of impacts. Up to the point where space charge effect supervenes, the electron flow is directly proportional to the number of electrons entering the multiplier, which, therefore has linear characteristics.

Although I have found it desirable to deposit the secondary emitting surface upon the resistor wires themselves, this is by no means essential. The resistor may be wound upon the exterior of a glass tube, and the secondary emitter deposited upon the interior surface of this tube. In the present instance, although the major secondary emission takes place from the resistor 41, a certain amount of the action occurs from the surfaces of the bars 37 of the form upon which the resistor is wound.

Even the use of a wound resistor may be dispensed with, and a resistor sputtered on the exterior of the form may be used in conjunction with the interior emitting surface. It is even possible to make this emitting surface itself the resistor, but since the best secondary emitter appears to be a mono-molecular layer of the emitting material, and since it is extremely difficult to make such a layer having no discontinuities, I prefer to use the device of the type shown.

The shape of the hollow resistor is also of minor importance. The principal desideratum is that there be opposing surfaces against which the repeated impacts may take place, so that the electrons may follow a zig-zag course thru the multiplier, with a release of a plurality of new electrons and consequent amplification at each successive impact.

The filamentary electrode 42 exercises a dual function. First, that of depositing the secondary emitting surface within the multiplier, and second, increasing the transverse velocity of the electrons. The latter effect increases the number of impacts occurring thru the multiplier; without the electrode 42 a much smaller number of reflections would occur with a multiplier of given diameter, or a much smaller diameter would be necessary to give the same amplification. The filamentary electrode, therefore, permits a greater diameter of multiplier and consequently increases the resistance it is possible to get on a multiplier of given length.

It should be noted that whereas the ordinary audion amplifier causes distortion if it be operated at "saturation current", my electron multiplier should always be operated in this manner unless it is to cause distortion. If the potential used drops to a point permitting a space charge to establish itself in the output end of the tube, the potential along the tube is effectively reduced. This decreases the number of electrons flowing in the external circuit due to the impact of a single primary, and hence destroys the linearity of the device.

I claim:

1. In combination, means for producing a modulated electron stream, a pair of opposed surfaces adapted to liberate electrons by second-

ary emission, and means for producing a potential gradient longitudinally of said surfaces, one of said surfaces being positioned to intercept said electron stream.

2. In combination, means for producing a modulated electron stream, a pair of opposed surfaces adapted to liberate electrons by secondary emission, an electrode extending intermediate said surfaces for establishing an electrostatic field therebetween, and means for producing a potential gradient longitudinally of said surfaces, one of said surfaces being positioned to intercept said electron stream.

3. In combination, means for producing a modulated electron stream, a hollow resistor for producing a graduated electrostatic field and mounted to receive the electron stream on an inner wall thereof, said inner wall being adapted to liberate electrons by secondary emission, and an electrode extending longitudinally within said resistor.

4. An electron discharge device comprising a pair of opposed surfaces adapted to liberate electrons by secondary emission, a resistor for producing a potential gradient along said surfaces, an electrode extending longitudinally intermediate said surfaces, and means for directing a modulated electron stream against one of said surfaces.

5. An electron discharge device comprising a pair of opposed surfaces adapted to liberate electrons by secondary emission, a resistor for producing a potential gradient along said surfaces, an electrode extending longitudinally intermediate said surfaces, and means for directing a modulated electron stream against the low potential end of one of said surfaces.

6. In combination, means for producing a modulated electron stream, a high resistance hollow coil, a filamentary electrode extending axially of said coil, and a surface within said coil adapted to liberate electrons by secondary emission and adapted to intercept said electron stream.

7. In combination, means for producing a modulated electron stream, a hollow resistor for producing a graduated electrostatic field and mounted to receive the electron stream on an inner wall thereof, said inner wall being adapted to liberate electrons by secondary emission, an electrode extending longitudinally within said resistor, and a shield connected to said electrode substantially closing one end of said resistor.

8. In combination, a hollow resistor for producing a graduated electrostatic field and having an inner wall adapted to liberate electrons by secondary emission, an electrode extending longitudinally within said resistor, and means for directing a modulated electron stream against said wall at the low potential end of said field.

9. In combination, a hollow resistor for producing a graduated electrostatic field and having an inner wall adapted to liberate electrons by secondary emission, an electrode extending longitudinally within said resistor, and means for directing a modulated electron stream into said resistor at an oblique angle against said inner wall.

10. In combination, a hollow resistor for producing a graduated electrostatic field and having an inner wall adapted to liberate electrons by secondary emission, an electrode extending longitudinally within said resistor, and means for directing a modulated electron stream into said resistor at an oblique angle against said inner wall at the low potential end of said field.

PHILO T. FARNSWORTH.