June 5, 1923. 1,457,364

G. H. HALLOCK ET AL

CONVEYER SYSTEM

Filed Sept. 15, 1919 3 Sheets-Sheet 1

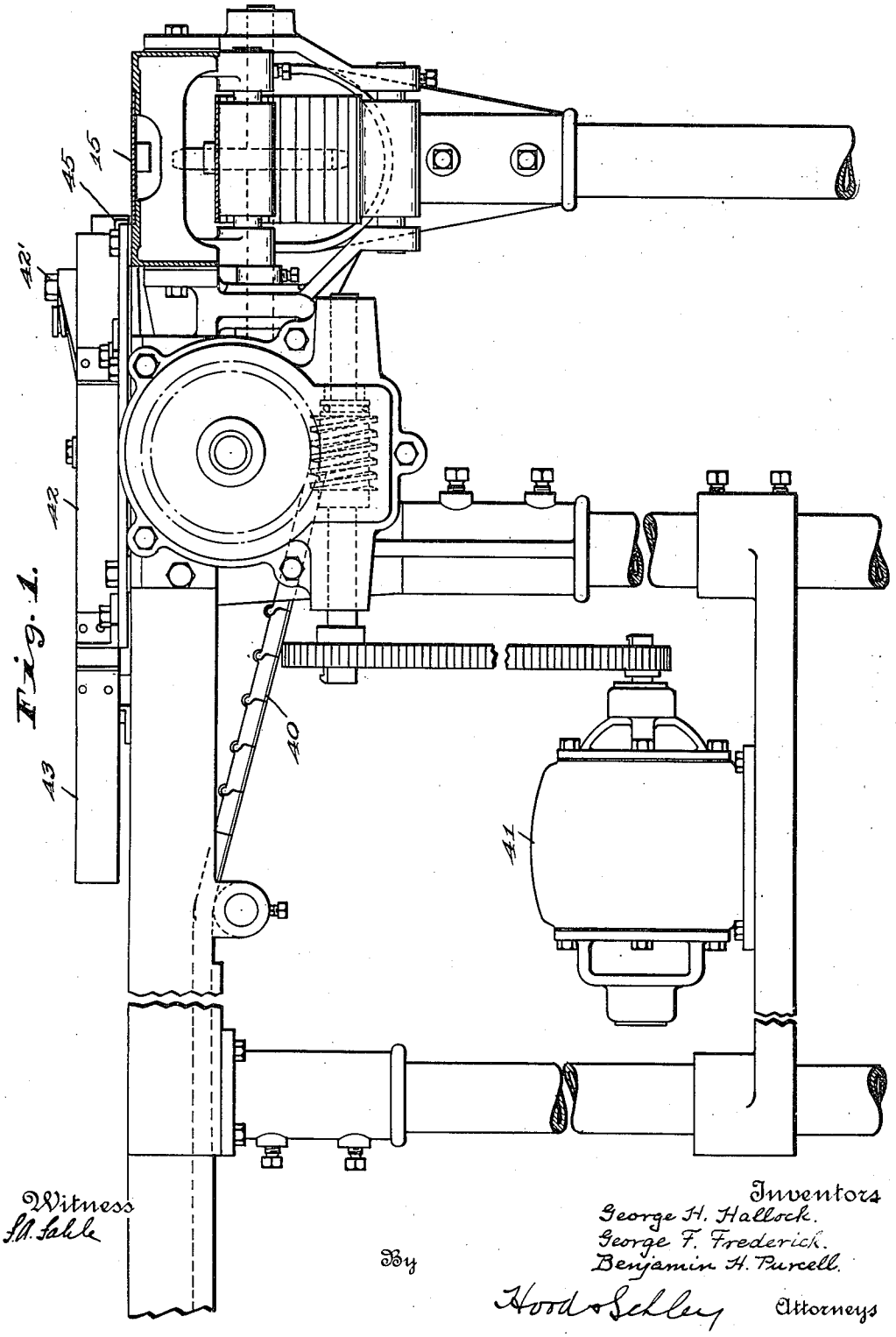

Fig. 1.

Witness
H. M. Sable

Inventors
George H. Hallock.
George F. Frederick.
Benjamin H. Purcell.

By Hood & Schley Attorneys

June 5, 1923.

1,457,364

G. H. HALLOCK ET AL

CONVEYER SYSTEM

Filed Sept. 15, 1919

3 Sheets-Sheet 2

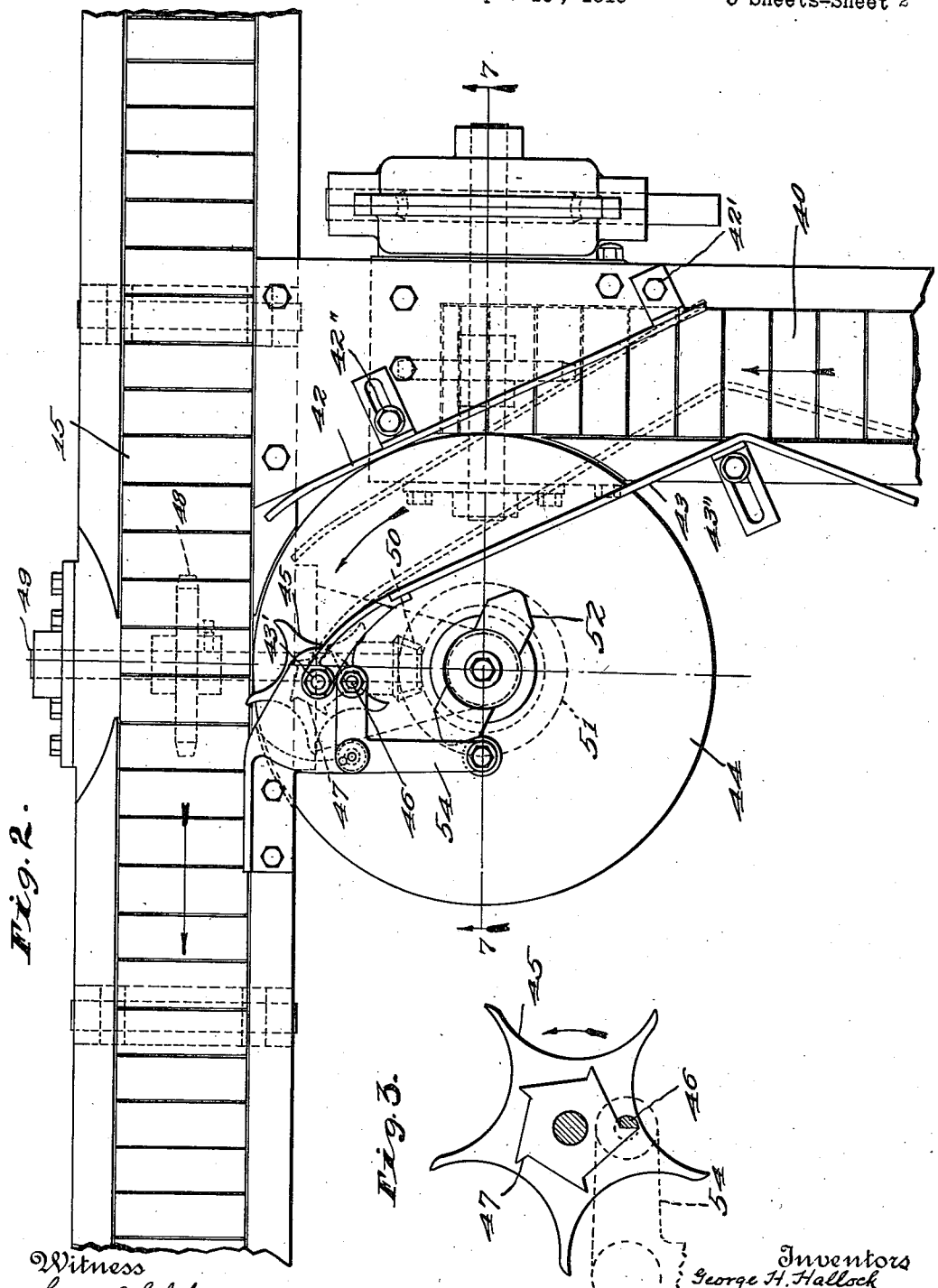

Fig. 2.

Fig. 3.

Witness
Frank A. Fahle

Inventors
George H. Hallock
George F. Frederick
Benjamin H. Purcell.

By Hood & Schley Attorneys

June 5, 1923.

1,457,364

G. H. HALLOCK ET AL

CONVEYER SYSTEM

Filed Sept. 15, 1919

3 Sheets-Sheet 3

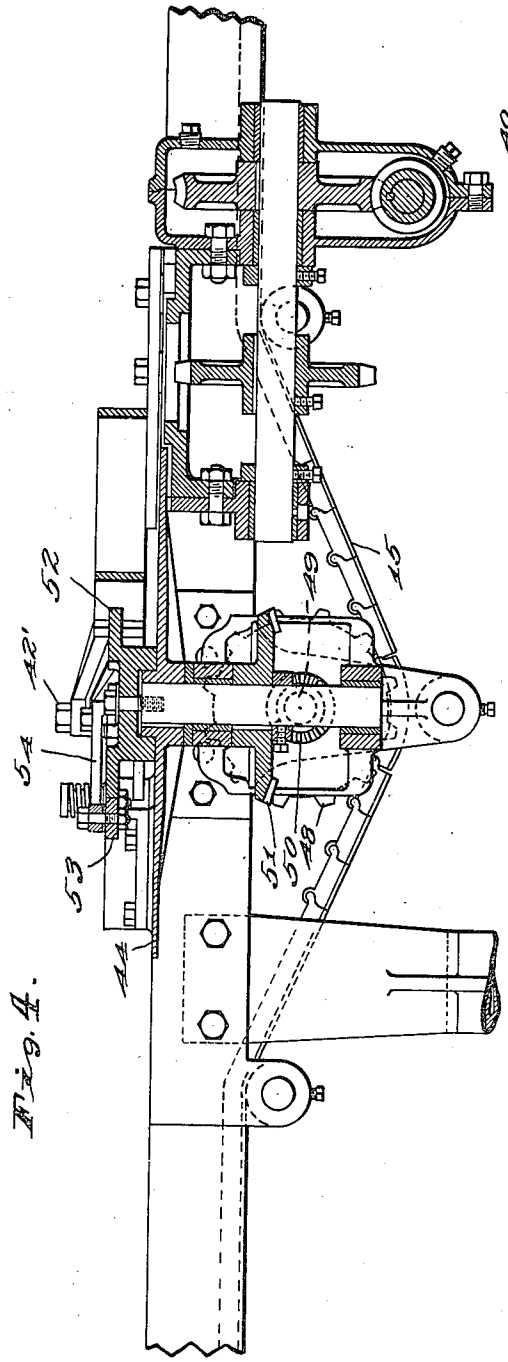

Fig. 4.

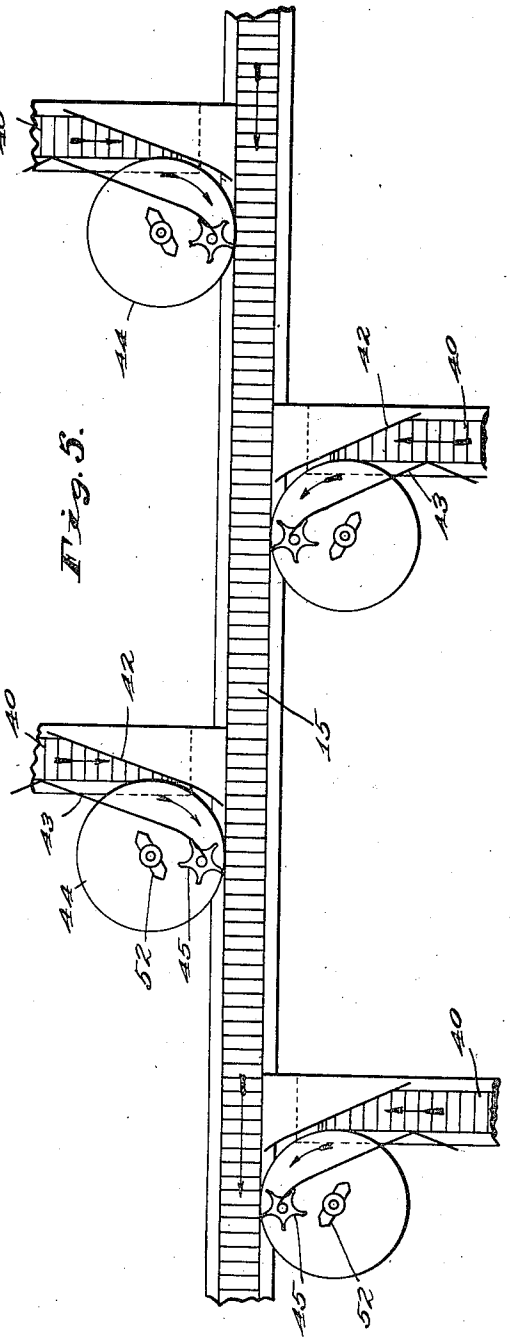

Fig. 5.

Witness
Frank A. Sahle

Inventors
George H. Hallock.
George F. Frederick.
Benjamin H. Purcell.

By Wood & Schley Attorneys

Patented June 5, 1923. 1,457,364

UNITED STATES PATENT OFFICE.

GEORGE H. HALLOCK, GEORGE F. FREDERICK, AND BENJAMIN H. PURCELL, OF TERRE HAUTE, INDIANA, ASSIGNORS TO AUTOMATIC MACHINERY COMPANY, OF TERRE HAUTE, INDIANA, A CORPORATION OF INDIANA.

CONVEYER SYSTEM.

Application filed September 15, 1919. Serial No. 323,964.

To all whom it may concern:

Be it known that we, GEORGE H. HALLOCK, GEORGE F. FREDERICK, and BENJAMIN H. PURCELL, citizens of the United States, residing at Terre Haute, in the county of Vigo and State of Indiana, have invented a new and useful Conveyer System, of which the following is a specification.

The object of our invention is to produce an apparatus by means of which articles, such as bottles, jars, cans, packages, etc., may be automatically delivered from one or more stations or sources, to a common carrier, the arrangement being such that the articles from the several sources may be kept from interfering with each other as they pass to and upon the common carrier.

The accompanying drawings illustrate this invention. Fig. 1 is an elevation of one of the lateral feed units, and, in vertical section, the main receiving carrier; Fig. 2 a plan of the parts shown in Fig. 1; Fig. 3 a fragmentary detail of one of the governors; Fig. 4 a section on line 7—7 of Fig. 2; and Fig. 5 a fragmentary plan of a possible arrangement of main receiving carrier and several lateral food units.

The articles are delivered to carrier 15 at various points in its length by feeding carriers 40, which are similar to carrier 15 and each driven by an appropriate motor 41. It is important that, as articles pass any point of receipt, there be no interference with articles arriving at that point. Each carrier 40 delivers toward a side of carrier 15 and the articles are deflected therefrom by deflector-bars 42, 43, so as to pass on to the upper surface of a smooth transfer disk 44 which delivers the articles to carrier 15. As the articles are advanced by disk 44, they come successively into contact with an arm of the star-wheel governor 45 which is moved solely by the articles and is normally locked against movement by a latch-pin 46 engaging ratchet 47 on the governor star obstructer 45. The lower side of carrier 15 is carried under a sprocket 48 (see Fig. 4) and this sprocket is geared to the shaft of disk 44 (by shaft 40 and gears 50 and 51) so that the movement of disk 44 is synchronized with carrier 15. Angularly adjustable on disk 44 is a cam 52 which intermittently engages roller 53 of lever 54 which carries pin 46 normally restraining the obstructer 45, the arrangement being such that, at regular intervals, the governor star obstructer 45 is released to permit disk 44 to deliver an article to carrier 15.

Those feed carriers and associated parts will be arranged to deliver from the forming stations to the carrier 15 at appropriate points (as indicated in Fig. 5) and as the disks 44 are synchronized with the carrier 15, it will be apparent that, with proper adjustment, which may be accomplished by angular adjustment of cams 52 and appropriate setting of sprocket wheels 48 in mesh with carrier 15, articles from any particular feed carrier will be deposited on carrier 15 at appropriate spaced intervals which will differ from the points of deposit from any other feed-carrier, and thus the articles will be prevented, as they pass various points of receipt, from interfering with articles arriving at that point.

In order to adapt the device for handling articles of different diameters, the deflector bar 42 is pivoted at 42′ and clamped at 42″, while bar 43 is pivoted at 43′ and clamped at 43″, so that, as indicated in dotted lines, the throat, or passage, between these two bars may be adjusted to approximately the diameter of the articles arriving on carrier 40 and cause delivery of these articles to a proper point on disk 44 for delivery to governor 45 and carrier 15.

We claim as our invention:

1. The combination with a main conveyer, of a feeding conveyer leading laterally to the main conveyer, a rotary transfer disk arranged in a corner between said conveyers for frictional reception of articles, means for rotating said disk, an obstructer arranged adjacent the disk in the line of travel of articles on the disk, means for normally restraining said obstructer in obstructing position, and means synchronized with the main conveyer for intermittently withdrawing the restraining means.

2. The combination with a main conveyer, of a feeding conveyer leading laterally to the main conveyer, a rotary transfer disk arranged in a corner between said conveyers for frictional reception of articles, means for rotating said disk, an obstructer arranged adjacent the disk in the line of travel of articles on the disk and movable by said articles, means for normally restraining said ob-

structer in obstructing position, and means synchronized with the main conveyer for intermittently withdrawing the restraining means.

3. The combinaton with a main conveyer, of a feeding conveyer leading laterally to the main conveyer, a rotary transfer disk arranged in a corner between said conveyers for frictional reception of articles, means synchronized with the main conveyer for rotating said disk, an obstructer arranged adjacent the disk in the line of travel of articles on the disk, means for normally restraining said obstructer in obstructing position, and means synchronized with the main conveyer for intermittently withdrawing the restraining means.

4. The combination with a main conveyer, of a feeding conveyer leading laterally to the main conveyer, a rotary transfer disk arranged in a corner between said conveyers for frictional reception of articles, means synchronized with the main conveyer for rotating said disk, an obstructer arranged adjacent the disk in the line of travel of articles on the disk and movable by said articles, means for normally restraining said obstructer in obstructing position, and means synchronized with the main conveyer for intermittently withdrawing the restraining means.

5. The combination with a main conveyer, of a feeding conveyer leading laterally to the main conveyer, a rotary transfer disk arranged in a corner between said conveyers for frictional reception of articles, means for rotating said disk, an obstructer arranged in the line of travel of articles from the feeding conveyer to the main conveyer, means for normally restraining said obstructer in obstructing position, and means synchronized with the main conveyer for intermittently withdrawing the restraining means.

6. The combination with a main conveyer, of a feeding conveyer leading laterally to the main conveyer, a rotary transfer disk arranged in a corner between said conveyers for frictional reception of articles, means for rotating said disk, an obstructer arranged in the line of travel of articles from the feeding conveyer to the main conveyer, means for normally restraining said obstructer in obstructing position, and means syncronized with the main conveyer for intermittently withdrawing the restraining means.

7. The combination with a main conveyer, of a feeding conveyer leading laterally to the main conveyer, a rotary transfer disk arranged in a corner between said conveyers for frictional reception of articles, means synchronized with the main conveyer for rotating said disk, an obstructer arranged adjacent the disk in the line of travel of articles from the feeding conveyer to the main conveyer, means for normally restraining said obstructer in obstructing position, and means synchronized with the main conveyer for intermittently withdrawing the restraining means.

8. The combination with a main conveyer, of a feeding conveyer leading laterally to the main cenveyer, a rotary transfer disk arranged in a corner between said conveyer, for frictional reception of articles, means synchronized with the main conveyer for rotating said disk, an obstructer arranged in the line of travel of articles from the feeding conveyer to the main conveyer, means for normally restraining said obstructer in obstructing position, and means synchronized with the main conveyer for intermittently withdrawing the restraining means.

9. The combination with a main conveyer, of a feeding conveyer, a rotary transfer disk leading laterally to the main conveyer, a rotary star-wheel obstructer arranged in the line of travel of articles from the feeding conveyer to the main conveyer, means for rotating the disk, a pin for normally restraining the obstructer in obstruction position, and a pin withdrawing train driven by the main conveyer.

In witness whereof, we have hereunto set our hands at Terre Haute, Indiana, this tenth day of September, A. D. one thousand nine hundred and nineteen.

GEORGE H. HALLOCK.
GEORGE F. FREDERICK.
BENJAMIN H. PURCELL.