May 14, 1940. C. W. MARTIN 2,200,396

ANTENNA SYSTEM

Filed Jan. 25, 1938

Fig. 1.

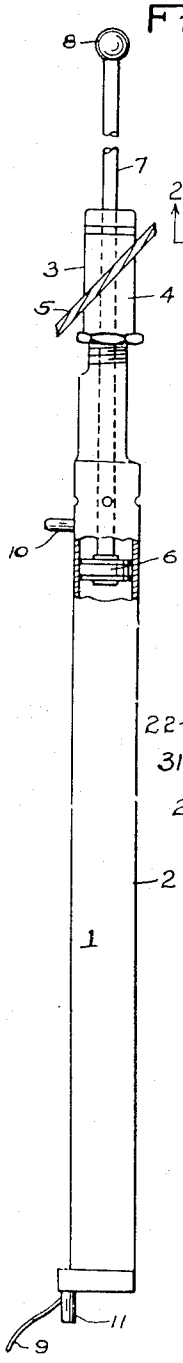

Fig. 3.

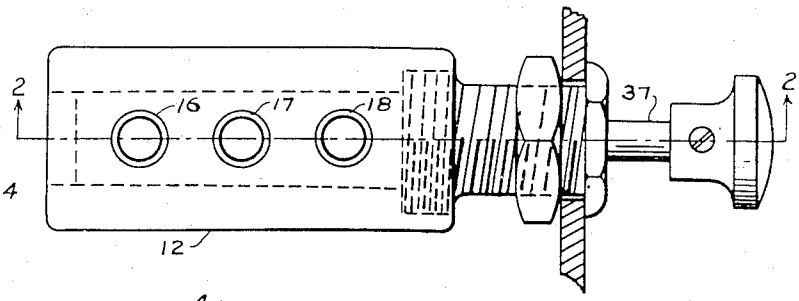

Fig. 2.

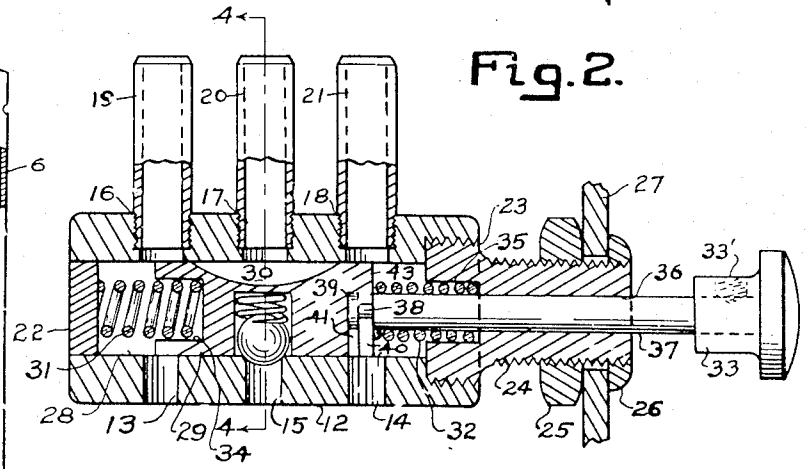

Fig. 4.

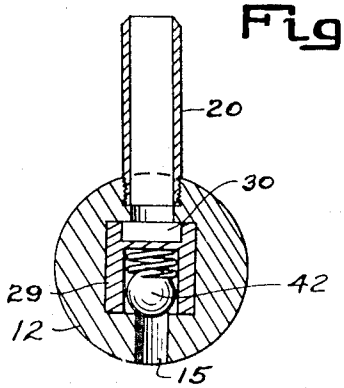

INVENTOR.
CARY W. MARTIN
BY Earl C. Moore
ATTORNEY.

Patented May 14, 1940

2,200,396

UNITED STATES PATENT OFFICE

2,200,396

ANTENNA SYSTEM

Cary W. Martin, Los Angeles, Calif.

Application January 25, 1938, Serial No. 186,855

3 Claims. (Cl. 250—33)

This invention relates to valvular controlling means, and particularly to an improved valve especially designed and adapted for controlling the operation of an extensible radio antenna or similar device of the character employed to provide a collecting or radiating system for radio apparatus installed in a motor vehicle, and which is adapted to be retracted into the body of the vehicle when not in use.

An important object of the invention is to provide such a valve mechanism which permits motivation of an extensible aerial under the influence of the reduced pressure generated in the intake manifold of an internal combustion engine, and which enables selective connection of the manifold to appropriate actuating mechanism by which the antenna may be extended and retracted at will, but which is so arranged as to return automatically to a sealing position in which the vacuum line to the intake manifold is tightly closed off, to prevent disturbance of pressure relations in the manifold, under all conditions and at all times, except while the valve is being manually moved to or positively held by the operator in an actuating position.

Another object is to provide such a valve mechanism, especially adapted for the indicated purpose, which is so arranged that the reduced pressure in the intake manifold to which the assembly is connected acts upon the valve in a manner to increase the tightness with which it maintains the valve in closed and sealed relation when in its normal "off" position.

Still further objects will become apparent from reading other parts of the specification and from perusing the drawing made a part hereof.

The inventor herewith expressly sets forth that the invention herein disclosed is not to limit the scope of its application, nor the kind of elements and structure used to teach one how to use, make and vend the same, except as limited by the appended claims.

In the drawing:

Fig. 1 shows in elevation an extensible and retractable antenna unit of a variety with which my improved valve mechanism is adapted to be used.

Fig. 2 is a longitudinal and substantially central view of a valve mechanism designed to control the extension and retraction of the antenna unit taken substantially along the line 2—2 of Fig. 3.

Fig. 3 is a top plan view of the valve.

Fig. 4 shows cross section taken substantially along the line 4—4 of Fig 2, and looking in the direction of the arrows.

The antenna unit designated in the drawing by the numeral 1 may be any of the types shown in applicant's copending application, Serial Number 158,129 filed August 9th, 1937, or any other type which is constructed to have its antenna rod extended and retracted by fluid pressure.

Since specific details of the antenna unit form no part of the present invention, the description thereof, will be confined to a disclosure of its general arrangement and principles of operation.

The casing 2 is preferably made of some insulating material such as synthetic resin or plastic of the character sold under the trade-names "Bakelite" or "Catalin," or it may be of hard rubber or other material suitable for the purpose. Adjustably fixed to the top of the casing are two biased cushioning and clamping elements 3 and 4, between which is clamped the roof 5 of the vehicle, or other housing within which the antenna device is concealed.

Within the casing is a reciprocable piston or similar element 6 which is fitted to the walls of the casing in a manner to prevent fluid leaking between them. The piston is fixed to an antenna rod 7 which is reciprocable with the piston so that it may be extended from and withdrawn into the casing 2. A ball 8 is fixed to the top of the rod and rests upon the top of element 3 when the rod is drawn into the casing. The rod and ball are made of material which is a good conductor of electricity and are preferably plated with chromium or otherwise treated to protect the metallic rod from the weather, and also to enhance its appearance.

A flexible wire or cable 9, round or flat, emerges from the bottom of the casing and serves the lead-in conductor to the radio set of the vehicle or other place where the radio set may be situated. The wire is preferably well insulated exteriorly of the casing but may not be insulated within the casing, if the latter is formed of insulating material. Within the casing, the wire is flat or ribbon-like and recessed into the wall of the casing. The wire 9 makes sliding connection with the bottom end of the rod 7 as by spring clips, etc., (see applicant's copending application) to provide electrical connection with the antenna rod.

Teats 10 and 11 provide fluid conducting communication to the space within tube 2 above and below the piston 6. When suction is applied above the piston, via teat 10, atmospheric pressure acts

upon the bottom of the piston via the teat 11, to raise the piston, and extend the antenna rod, whereas, when suction is applied to teat 11, atmospheric pressure enters the cylinder through teat 10, to cause the piston to fall and thus retract the antenna rod.

The valve which controls the operation of the antenna device comprises a relatively heavy cylindrical casing 12 having vent perforations 13 and 14, and detent hole 15 along the bottom side thereof and perforations 16, 17 and 18 along the top side thereof. The last named group of perforations are threaded to receive the threaded nipples 19 and 21 by which connections to the antenna unit are provided and nipple 20 which is connected to a portion of the engine within which a reduced pressure is developed when the engine is in operation. One end of the casing 12 is tightly closed by a plug 22, while at the other end, a threaded plug fitting 23 is provided having an elongated reduced part 24 protruding therefrom and threaded to receive the lock nuts 25 and 26 which serve as means for holding the valve structure to the dash 27 of the vehicle. The bore 28 of the valve casing 12 is shown as square, and is carefully machined to provide a smooth surface to receive a piston valve 29 which snugly engages the walls thereof to form an air seal. While the engine is running, suction in tube 20 will draw the piston valve toward the suction port to maintain a tight seal between the piston and the top of the valve chamber. This tightly closes off the suction line to prevent leakage into the intake manifold and thus prevent interference with proper operation of the engine. The piston valve has a slot-like cavity 30 at the top thereof sufficiently long to connect the perforations 16 and 17, or 17 and 18 depending upon the position of the piston.

In order to keep the piston in a central position, springs 31 and 32 are employed, one located at each end of the piston. These springs are of equal size and strength, and so always return the piston to a central position when the finger knob 33 is not under manual control. One end of the spring 31 rests against the plug 22, and the other end in a recess 34 at one end of the piston. The other spring 32 has one end resting against the piston, and the other end in a recess 35 in the fitting 23.

The fitting 23 has a bore 36 throughout its entire length to snugly receive a sliding rod 37 which carries at its outer end a finger knob 33, attached thereto by a set screw 33'. The inner end of the rod 37 passes through the spring 32 to engage one end of the piston 29. This end of the rod is provided with a stud 38 having an enlarged circular or disc end 39, and the corresponding end of the piston is provided with a slot 40 sufficiently broad to receive the stud 38, and with recessed groove-like portions 41 on both sides of the slot to receive the enlarged portion 39 of the stud. By this construction, the rod 37 can be attached to the piston by merely sliding it into position as shown.

In order to frictionally and releasably hold the piston 29 centrally in the bore 28, a detent ball 42 is provided of sufficient size to partially sink into the perforation 15, and is always urged into such position by a spring 43.

The tube 19 of the valve is connected to one of the teats 10 or 11 of the antenna unit 1 and the tube 21 connected to the other teat. The tube 20 is connected to the intake manifold of the automobile engine or to any other means which has a source of negative pressures or vacuum power.

When the finger knob 33 is not under manual force, the piston 29 of the valve is held in a central position of the bore 28 by the springs 31 and 32, and also by the ball 42.

With the piston in such position, the cavity 30 and hence tube 20 are shut off from tubes 19 and 21, thus allowing the antenna rod to remain in the position in which it is left by the operator in the last movement of the piston, for instance, as shown in dotted lines in Fig. 1.

Now, if the operator pulls the knob 33 outwardly, or away from dash 27, tubes 21 and 20 would be placed in communication, and assuming that the tube 21 is connected to teat 11 and tube 19 to teat 10, suction would be applied beneath the piston, and atmospheric pressure above it, via tube 19 and vent 13, to cause the antenna rod 7 to be drawn into the casing 2. The piston 6 may be stopped at any desired position between the top and bottom of the casing by merely releasing the knob 33 so that the spring 32 can return the valve element 29 to the central or neutral position.

Reverse movement of the knob 33, or moving it toward the dash, would obviously raise the piston and antenna rod because such a positioning of the valve piston 29 would bring tubes 19 and 20 into communication so as to apply suction above the piston 6, and atmospheric pressure below the piston 6 via tube 21 and vent 14.

Having described one form of my invention, what I claim is:

1. A valve adapted to control the projection and retraction of an extensible aerial or the like, comprising a valve casing having substantially aligned ports spacedly arranged along one side thereof, including a centrally disposed eduction port and an inlet port on each side of the eduction port, a valve member slidable but non-rotatable in said casing and having a slot in its side facing said ports, said slot being movable by actuation of the valve to connect either of said inlet ports to said eduction port, the slot having end and side walls, being narrower than the valve member, and being closed except on its side facing said ports, said slot also being insufficient in length to reach either of said inlet ports when the valve is in centered position, whereby when so centered the slot is connected only to the eduction port, and reduced pressure in said port may cause a pressure differential upon opposite sides of said valve to urge the same into sealing engagement with the side of the valve casing in which said eduction port is located, to seal said eduction port.

2. In a valve construction as set forth in claim 1, spring means yieldably maintaining said valve member in said centered position.

3. In combination with a vehicle having a body, and engine and a portion appurtenant the same within which pressure variance occurs during operation of the engine, an aerial having an actuable portion projectable through and from the body and retractible thereinto, said actuable portion being adapted to be frictionally held in any of variously projected positions of adjustment, and controllable means for connecting said actuable portion of the aerial to said portion within which the aforementioned pressure variance occurs, including a valve incorporating a casing having an eduction port and a plurality of inlet ports, one located on either side of the eduction port, said eduction port being connected

to said portion within which pressure variance occurs, and said other ports being connected to said aerial portion to actuate the same when connected to the eduction port, a valve member movable across said ports and having a bridging opening adapted to connect either of said inlet ports to said eduction port, said bridging opening being closed at its bottom and ends to create a differential pressure upon opposite sides of the valve member, whereby the valve is forced against the casing by reduced pressure in the eduction port, and spring means normally returning said valve member to and maintaining it in a position in which said bridging opening communicates only with said eduction port.

CARY W. MARTIN.