United States Patent

Dowd

[15] **3,668,710**

[45] **June 13, 1972**

[54] SHOWER FACILITY

[72] Inventor: **Joseph F. Dowd**, P.O. Box 92, Hatch, N. Mex. 87937

[22] Filed: **Feb. 23, 1971**

[21] Appl. No.: **118,071**

[52] **U.S. Cl.** **4/145**, 4/11

[51] **Int. Cl.** **A47k 3/22**

[58] **Field of Search** 4/145, 146, 149, 151, 154, 4/1, 11, 166, 167

[56] **References Cited**

UNITED STATES PATENTS

2,561,265	7/1951	Burns	4/146
2,817,091	12/1957	Pamter	4/11 X
2,817,846	12/1957	Stift	4/11 X
3,594,825	7/1971	Reid	4/2

FOREIGN PATENTS OR APPLICATIONS

760,101	2/1934	France	4/145

Primary Examiner—Henry K. Artis

Attorney—Kenneth R. Glaser and John F. Booth

[57] **ABSTRACT**

A shower facility mounted on a wheeled frame having towing and safety equipment for transporting the facility by a powered vehicle from place to place over public roadways. The facility is divided into a central utility section and two end shower sections. The utility section contains the equipment necessary to supply water and power to the shower sections with the shower sections each containing a plurality of individual shower units. Each shower unit is divided into a dressing unit and a shower stall and is provided with a coin-operated means which can spray shower water and disinfectant into the shower stall and can actuate a heat lamp to warm the dressing room.

7 Claims, 6 Drawing Figures

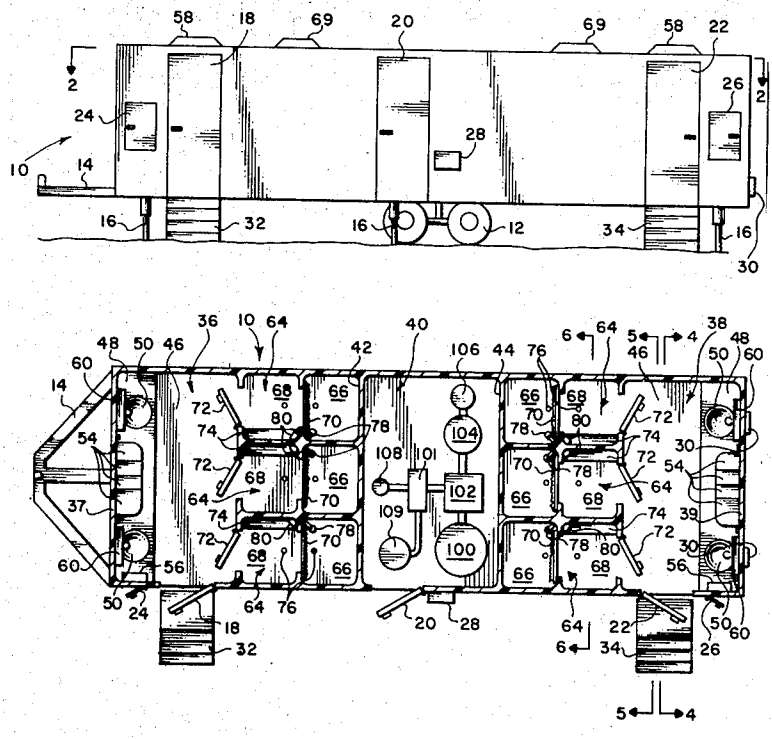

PATENTED JUN 13 1972

3,668,710

SHEET 1 OF 2

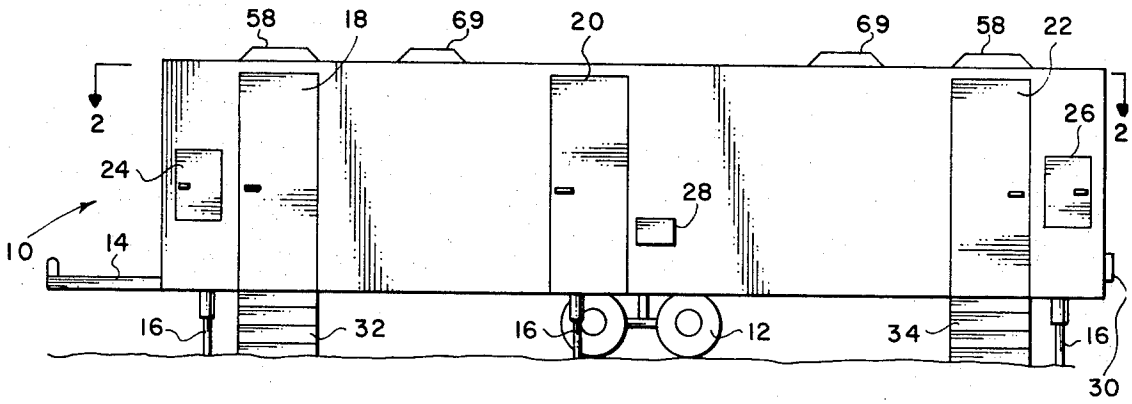

FIG. 1

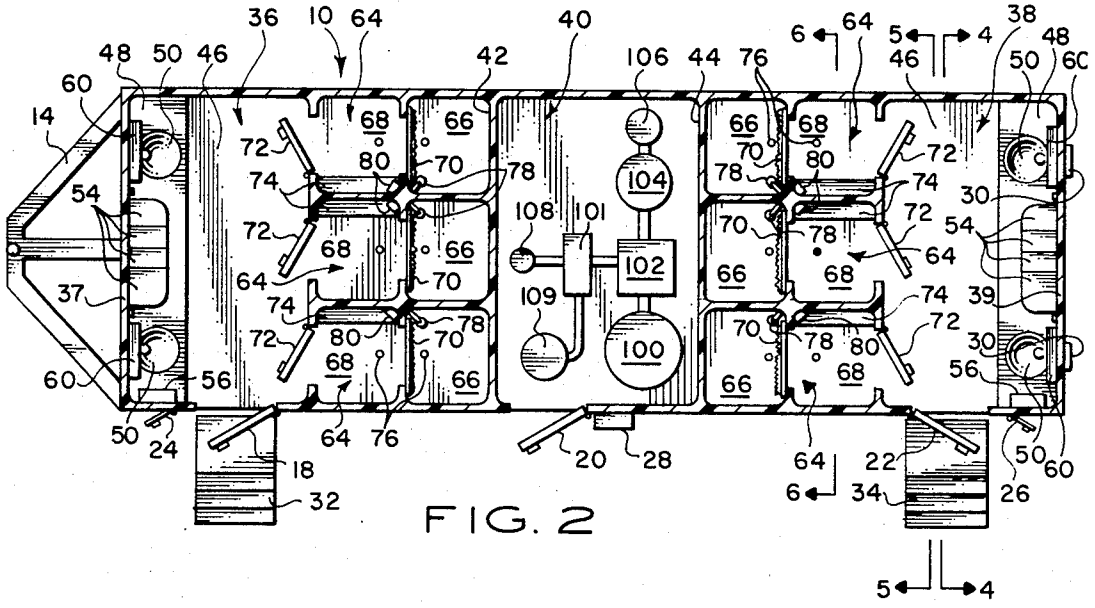

FIG. 2

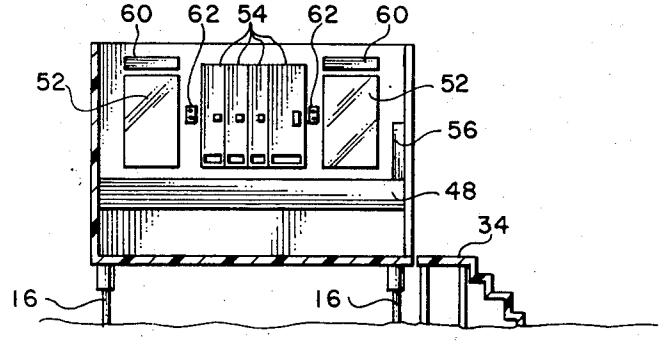

FIG. 4

INVENTOR

JOSEPH F. DOWD

John F. Booth

ATTORNEY

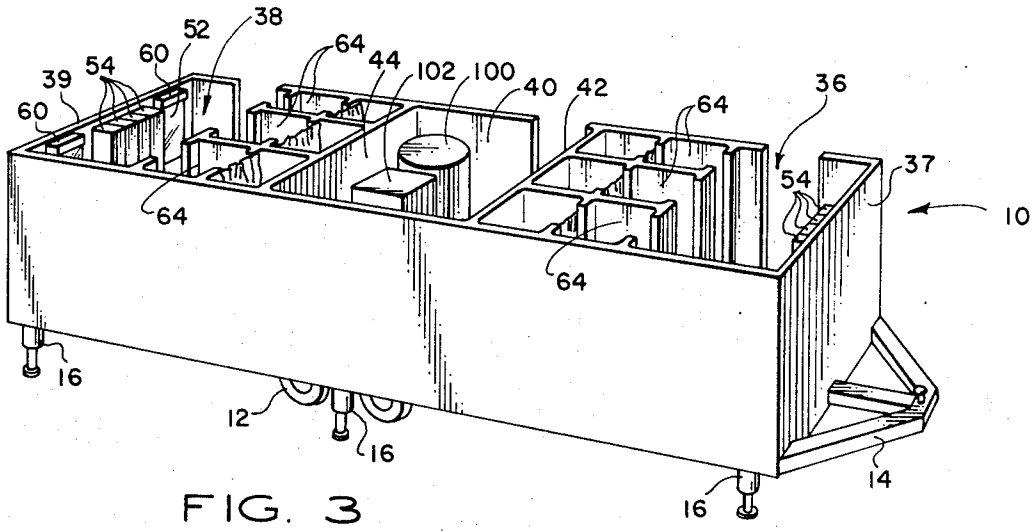

FIG. 3

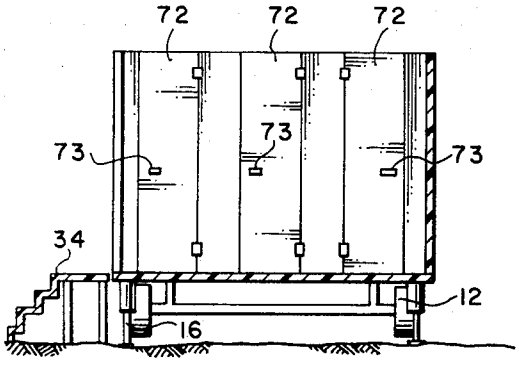

FIG. 5

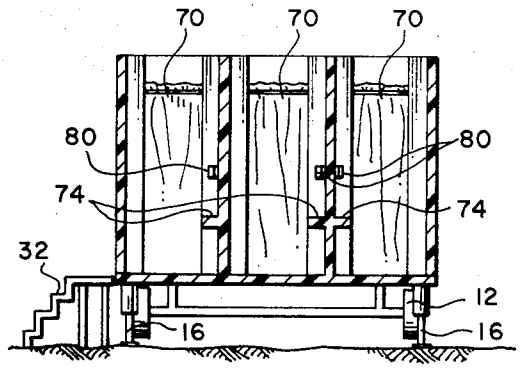

FIG. 6

INVENTOR
JOSEPH F. DOWD

John F. Booth
ATTORNEY

SHOWER FACILITY

BACKGROUND OF THE INVENTION

The present invention relates to shower facilities and more particularly to a new and improved portable shower facility which can be utilized in various locations to supply power and water and provide an efficient and sanitary public facility.

Those concerned with providing sanitary facilities to the public have long recognized the need for shower facilities at or near bus, airplane and train terminals, service stations, construction sites, remote work areas, factories, military operations, disaster areas, and recreational areas such as state parks, race tracks and the like.

The need for these facilities in some cases is temporary or seasonal, thus creating the need for a mobile facility. It should also be noted that due to the variety of types of areas in which these facilities are required that the conditions under which these facilities are used vary drastically. Thus, if one mobile facility is to be used in more than one location, it must have provisions for operation under different conditions such as extreme weather conditions, high or low water supply pressure, clean or dirty water, and with gas, electrical or even no local power supply at all. In addition to the above requirements, the facility must be economical to operate and transport while providing clean and sanitary shower facilities for the public.

SUMMARY OF THE INVENTION

The general purpose of the present invention is to provide a portable shower facility which can satisfy all the needs as outlined above. To attain this, the present invention contemplates the use of a unique mobile shower facility configuration wherein the facility is divided into two shower sections and has provisions for operating under various conditions, with or without external power.

OBJECTS OF THE INVENTION

An object of the present invention is the provision of a shower facility which can be transported from place to place over public roads.

Another object of the present invention is the provision of a portable shower facility which can be utilized in remote areas with a minimum of support facilities.

A further object of the present invention is the provision of a portable shower facility which can utilize surface or well water.

Still another object of the present invention is to provide a portable shower facility which can be used by the public and is clean and sanitary in operation.

Still a further object of the present invention is the provision of a portable shower facility which is simple and inexpensive to manufacture, transport and operate.

Yet another object of the present invention is the provision of a shower facility which is coin-operated.

Other objects and many of the attendant advantages of this invention will be readily appreciated by those of ordinary skill in the art as the same becomes better understood by reference to the following detailed description when considered in connection with the accompanying drawings, in which:

BRIEF DESCRIPTION OF THE DRAWINGS

FIG. **1** illustrates a plan view of an embodiment of the portable shower facility of the present invention;

FIG. **2** illustrates a section of the device taken on line **2—2** of FIG. **1** looking in the direction of the arrows;

FIG. **3** illustrates a perspective view of the device rotated 180° partly in section with the roof and doors removed for purposes of illustration;

FIG. **4** illustrates a section of the device taken on line **4—4** of FIG. **2** looking in the direction of the arrows;

FIG. **5** illustrates a section of the device taken on line **5—5** of FIG. **2** looking in the direction of the arrows; and

FIG. **6** illustrates a section of the device taken on line **6—6** of FIG. **2** looking in the direction of the arrows.

DESCRIPTION OF THE PREFERRED EMBODIMENT

Referring now to the drawings, wherein like referenced characters designate like or corresponding parts throughout the several views, there is shown in FIGS. **1** through **6** an embodiment of the portable shower facility of the present invention and for purposes of reference is generally designated by numeral **10**. As can be seen, this facility **10** is mounted on a wheeled frame **12** and is provided with a hitch assembly **14**, a suitable brake system and standard operating lights **30** so that the facility **10** can be attached to and safely towed by a powered vehicle over a road or similar surface to its location of use. The hitch assembly **14** utilized in the present invention can be of any suitable type well known in the art and commonly available in the market.

Once the facility **10** is in the desired position, the vehicle is detached, and the jacks **16** are lowered to rigidly support the facility **10** in position as shown. These jacks **16** are shown as being of a telescoping hydraulic type which can retract into the facility **10** while the facility is being transported and can extend out and lock into position when the facility is orientated as shown in FIG. **1**. By utilizing the jacks **16**, the facility can be used on non-level surfaces with the floor of the facility held in a level position.

The facility **10** can be constructed from a laminated fiberglass with polyethylene insulation or the like to insulate the facility against extreme exterior temperatures.

The facility **10** is provided with three doors **18**, **20** and **22** which provide access to the interior of the facility, two smaller doors, **24** and **26**, and a utility box **28**. The function and operation of these doors and the utility box will be hereinafter described. The facility **10** can also be equipped with two stairway units **32** and **34** which can be carried with the facility and placed adjacent the doors **18** and **22** respectively and adjusted to the correct height so that individuals using the facility can climb up to the level of the doors **18** and **22** and gain access to the facility **10**. These stairway units **32** and **34** can be collapsible or can be attached to the side of the facility so that they will fold down into position when desired.

Turning specifically to FIGS. **2** and **3**, it can be seen that the facility is divided by walls **42** and **44** into front and rear shower sections **36** and **38**, respectively, and a centrally located utility section **40**. The front and rear shower sections **46** and **48**, respectively, are identical in shape and size but are mirror images of each other. The doors **18** and **22** provide access to the front and rear shower sections **36** and **38**, respectively, so that individuals may enter the shower sections. The door **20** provides access to the utility section **40** so that the equipment located within the utility section can be serviced as required. This door **20** is provided with a lock to prevent unauthorized entrance into the utility section **40** and thus protects the equipment from theft and vandalism.

Each of the shower sections **36** and **38** have an anteroom area **46** the floor of which can be covered with carpeting of the type which is not damaged by contact with water. As can be seen in FIG. **4**, the end walls **37** and **39** of the shower sections **36** and **38** each have a shelf **48** which extends completely across the facility **10**. Two wash basins **50** are illustrated as being mounted in each of the shelves **48** with dressing mirrors **52** positioned therebehind. The wash basins **50** are provided with water taps (not shown) to supply water and the mirrors have lights and reflectors **60** to illuminate the mirror. A plurality of skylights **58** can be provided in the roof of the anterooms **46** to provide additional lighting. A plurality of electrical outlets **62** can also be provided for powering electric shavers, hairdryers and the like. The two basins **50** are shown for illustration purposes only and it is contemplated that more could be provided as required and dictated by the width and size of the facility **10**. Each of the anterooms **46** can be provided with a plurality of coin-operated dispensing machines **54** which can be utilized to dispense items such as combs, soap, paper towels, hair tonic and the like. Two refuse receptacles **56** are located in each of the anterooms to provide a place where discarded items may be placed. These refuse recepta-

cles **56** can be emptied from the exterior of the unit **10** by means of the doors **24** and **26**, thus avoiding the necessity of entering the facility to empty the refuse receptacles.

In FIGS. **2** and **3**, it can be seen that three shower units **64** adjoin each of the anterooms **46**, but it is contemplated that more or less units **64** could be provided depending on the size of the facility **10**. Each of the shower units **64** can be constructed in one piece from molded fiberglass and divided into a shower stall **66** and a dressing unit **68** and provided with a movable shower curtain **70** to prevent water from splashing from the shower stall **66** into the dressing unit **68**. A skylight **69** (shown in FIG. **1**) can also be located in the roof of the unit to provide light therein.

The dressing units **68** are separated from the anterooms **46** by doors **72** which are shown in detail in FIG. **5**. These doors **72** can each be provided with a lock **73** which is operated from the inside thereof to insure privacy of the shower units **64** while they are in use. Each of the dressing units **68** is provided with a bench **74** which can be utilized during dressing and undressing and a hook for hanging clothes to prevent them from falling on the floor. An electric heat lamp or other type of heating apparatus (not shown) can be provided in the roof or walls of the dressing unit **68** for use in warming the interior thereof. A pair of drains **76** are provided in each of the shower units **64** with one drain being located in the floor of the shower stall **66** and the other being located in the floor of the dressing unit **68** to drain the water from the floor thereof.

A shower head **78** is provided in each of the shower stalls **66** and each has suitable controls for regulating the pressure and temperature of the water supplied to the shower head by the apparatus provided in the utility section **40**. The shower stalls **66** are each provided with a disinfectant dispenser (not shown) which can spray disinfectant onto the floor of the unit and feet of the user to prevent the spread of disease. A coin-operated mechanism **80** can be provided in each shower unit to control the operation of the shower, the heat lamp, and disinfectant dispenser. This coin-operated mechanism **80** can be located in the dressing area **68** to operate the facility when the correct amount of currency is placed in the mechanism and can be assembled in accordance with coin handling mechanisms which are well known in the art.

The utility section **40** of the facility **10** is provided with apparatus which enable the facility to be utilized in remote areas where all utilities are not available. This utility section **40** contains a water heater and storage tank **100** which is utilized to heat the water to the temperature which is comfortable to the user of the shower facility. This water heater can be a type which uses natural gas, butane or electric power so that it can be operated with various types of utilities. A butane tank **101** can be provided to supply power to the facility **10** when other power is unavailable. A water pump **102** can also be provided to pump the water from a well or a surface source for utilization in the facility at locations where pressurized water is unavailable. This pump **102** can be either electrical, gas or butane powered so that it may be operated under various conditions. A commercially available water softener **104** and water filter **106** are also provided to control the quality of the water supplied to the unit. A pressure reducing valve **108** is provided in the incoming water line to control the pressure of the water supplied to the facility **10** to prevent damage to the water handling apparatus located within the facility. A storage tank **109** for liquid disinfectant is also located in the utility section **40**. An exhaust fan (not shown) can be provided in the roof of the utility section **40** to keep the apparatus located therein from overheating. The utility box **28** can be used for attaching to the available water and power sources at the various sites and is provided with a self-locking feature so that the connections are tamper-proof.

OPERATION OF THE DEVICE

The advantages and the features of this invention will become more apparent from a consideration of the operation of the shower facility **10**. Initially, the facility is attached by means of the hitch assembly **14** to the rear of a transport vehicle such as a ½-ton capacity truck or the like and pulled to the site at which the facility is to be used. The vehicle is then detached from the hitch assembly **14** and the jacks **16** are lowered to level and position the facility **10** as required. The stairway units **32** and **34** are then placed adjacent the access doors **18** and **22**, respectively. Next, the facility is attached to the available utilities by means of the utility box **28**, and after this is complete, the facility is ready for use.

To utilize the facility **10**, an individual enters one of the anterooms **46** by means of either door **18** or **22** and purchases those items which he may require from the coin-operated dispensing apparatus **54**. The user then enters one of the shower units **64** and closes and locks the door **72** behind him. The user then disrobes in the dressing unit **68**, hangs his clothes on the hook provided and places the correct amount of currency into the coin-operated mechanism **80**, whereupon the shower unit begins operation. First the coin-operated mechanism starts the flow of water through the shower head and the user adjusts the water temperature and spray to his satisfaction. The water temperature is regulated at the water heater to prevent any injury to the user, even at the hottest possible water selection. The mechanism then dispenses a disinfectant to cover the entire floor and feet of the user to reduce the possibility of infection. After a specified period of time, the flow of water stops, but just prior to the time that the water stops, the heat lamp in the dressing area **68** is activated so that the ambient temperature will be raised and no discomfort will be experienced by the user from being wet.

After drying and dressing, the user leaves the shower unit **64** to comb or brush his hair and shave at the wash basins **50** provided in the anteroom **46**. He can then dispose of waste materials into the refuse receptacles **56** and leave the facility **10**.

It should be understood, of course, that the foregoing disclosure relates to only a preferred embodiment of the invention and that numerous modifications or alterations may be made therein without departing from the spirit and scope of the invention as set forth in the appended claims.

What is desired to be secured by Letters Patent in the United States is:

1. A portable facility for movement from site to site by use of a powered vehicle comprising:

a rigid frame, a plurality of wheels suspended from said frame for movably supporting said facility;

hitch means on said frame for removably attaching said frame to the powered vehicle for transporting said facility; and

a body supported on said frame, said body having an interior area, said interior area being divided into first, second and third sections, said first and second sections having a plurality of shower units therein, said first and second sections being positioned adjacent the ends of said body with said third section being centrally positioned between said first and second sections, said third section having utility means for supplying power and water to said facility.

2. A portable facility as defined in claim **1** wherein said first and second sections each comprise an anteroom with a doorway to the exterior of the facility, a plurality of separate shower units, closable privacy door separating said anteroom from each of said shower units, said shower units being located on one side of said anterooms adjacent said third section, each of said shower units comprising a dressing unit and a shower stall, a movable partition separating said dressing unit and said shower stall to prevent water from splashing into said dressing unit, and shower means in said shower stalls for supplying and controlling a spray of shower water.

3. A portable facility as defined in claim **2** wherein said shower means is coin-operated.

4. A portable facility as defined in claim **2** wherein heat means is located in said dressing room for providing heat.

5. A portable facility as defined in claim 4 wherein each of said shower means additionally comprises a disinfectant dispenser for spraying disinfectant onto the floor and feet of an individual using the shower stall and wherein said utility means additionally comprises disinfectant supplying means.

6. A portable facility as defined in claim 5 wherein said shower means is coin-operated for first operatively actuating said shower means for a limited period of time, second actuating said disinfectant dispenser for a limited period of time during actuation of said shower means, and third actuating said

heat means for a limited period of time.

7. A portable facility as defined in claim 1 wherein said utility means comprises means for heating water supplied to said facility, water pressure regulator means for limiting the maximum water pressure supplied to said facility, water filter means for filtering the water supplied to said facility and water softener means for conditioning the water supplied to said facility and circuit means for supplying power to said facility.

* * * * *