Jan. 14, 1947. A. BARNSTEINER ET AL 2,414,163

HEATING APPARATUS

Filed May 8, 1943 3 Sheets-Sheet 1

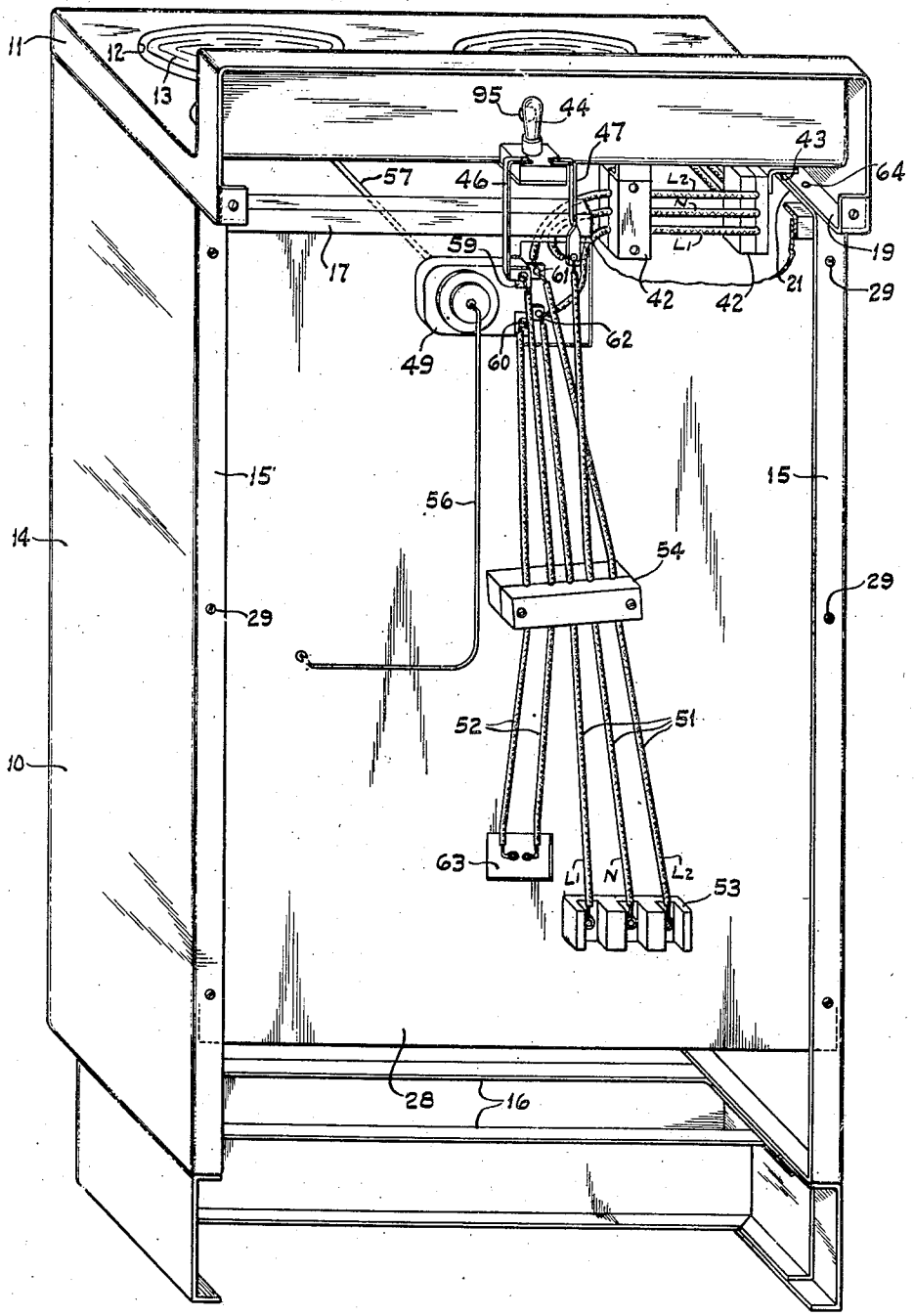

FIG. 1.

WITNESSES:

Geo. R. Ermall.

E. H. Lutz.

INVENTORS
ALFONS BARNSTEINER,
EDWIN H. LOCKWOOD.

BY R. J. Eisinger

ATTORNEY

Jan. 14, 1947. A. BARNSTEINER ET AL 2,414,163

HEATING APPARATUS

Filed May 8, 1943 3 Sheets-Sheet 2

FIG. 2.

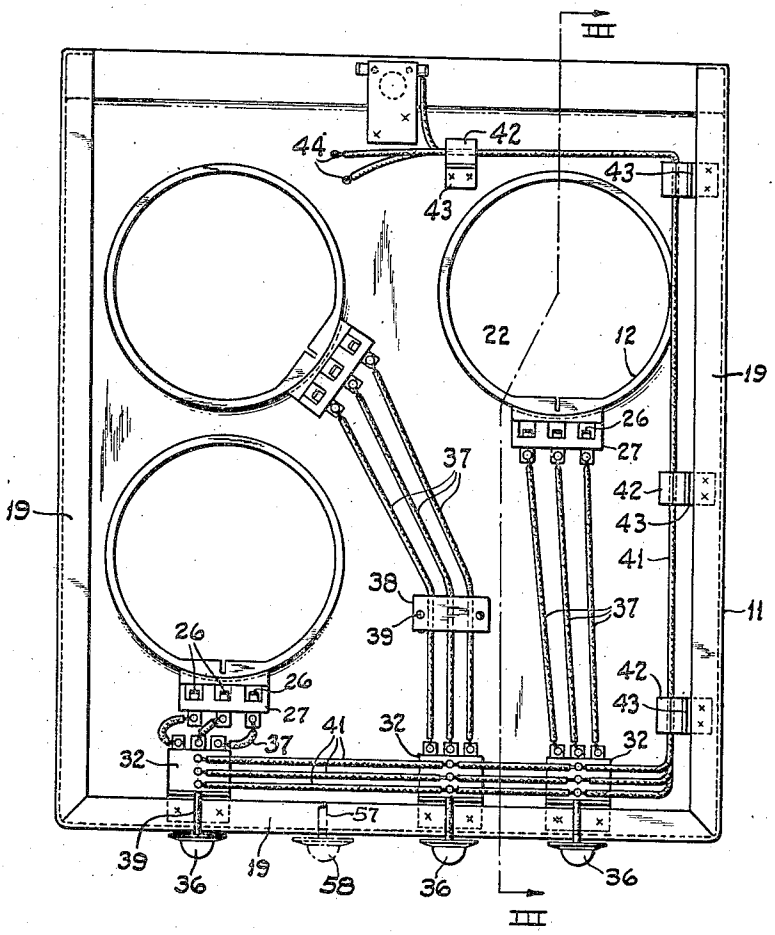

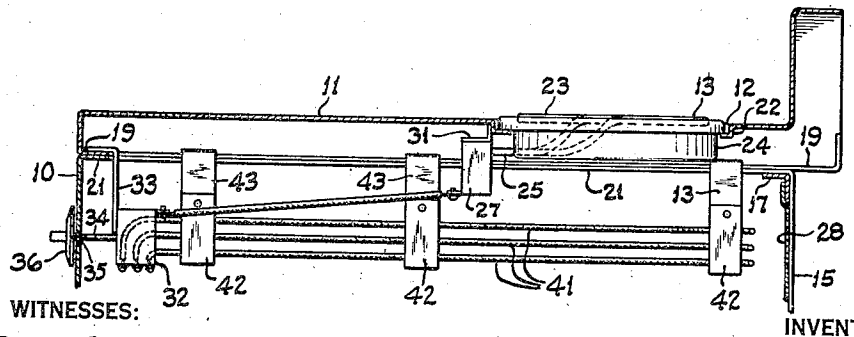

FIG. 3.

WITNESSES:

Roy M. Envall

E. H. Lutz

INVENTORS

ALFONS BARNSTEINER,

EDWIN H. LOCKWOOD.

BY R. J. Eisinger

ATTORNEY

Jan. 14, 1947. A. BARNSTEINER ET AL 2,414,163

HEATING APPARATUS

Filed May 8, 1943 3 Sheets-Sheet 3

FIG. 5.

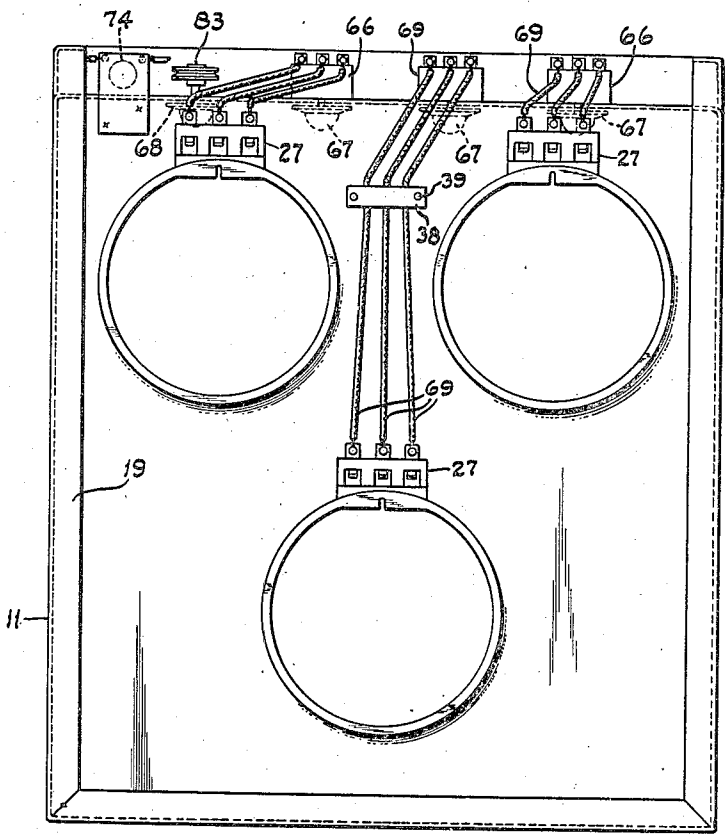

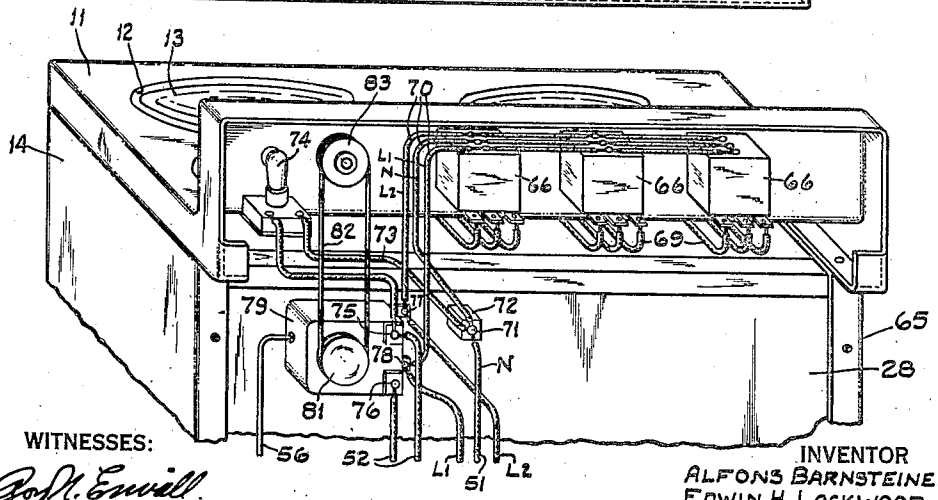

WITNESSES:

Roy N. Enwall

E. H. Lutz.

FIG. 4.

INVENTOR

ALFONS BARNSTEINER,

EDWIN H. LOCKWOOD.

BY R. J. Eisinger

ATTORNEY

Patented Jan. 14, 1947

2,414,163

UNITED STATES PATENT OFFICE

2,414,163

HEATING APPARATUS

Alfons Barnsteiner and Edwin H. Lockwood, Mansfield, Ohio, assignors to Westinghouse Electric Corporation, East Pittsburgh, Pa., a corporation of Pennsylvania

Application May 8, 1943, Serial No. 486,134

1 Claim. (Cl. 219—37)

1

This invention relates to heating apparatus and particularly to an electric cooking range and it has for an object to provide an improved device of the character described.

It is an object of the present invention to provide an electric cooking range which is readily assembled.

Another object is to provide an electric range of such construction that assembly of the switches, terminal receptacles and wiring is facilitated.

Another object is to provide an improved method of assembling the switches, terminal receptacles and wiring of an electric range.

These and other objects are effected by our invention as will be apparent from the following description and claim taken in connection with the accompanying drawings, forming a part of this application, in which:

Fig. 1 is a rear perspective view of an electric range in which the present invention is incorporated;

Fig. 2 is a bottom plan view of the platform or top of the range shown in Fig. 1, with the surface units removed;

Fig. 3 is a sectional view taken substantially on the line III—III of Fig. 2;

Fig. 4 is a view corresponding to the upper portion of Fig. 1, illustrating a modification of the invention; and,

Fig. 5 is a bottom plan view of the range platform or top shown in Fig. 4, with the surface units removed.

The range illustrated in Fig. 1 is generally of conventional construction and includes a body 10 having an electrically-heated oven (not shown) accessible through a door at the front, and a combined platform and backsplasher 11 provided with holes or recesses 12 for the reception of electric surface cooking units 13. The range body 10 comprises an outer sheet metal wrapper 14 forming the sides and front of the range and provided with inwardly-turned, vertical flanges 15 at the rear. The wrapper 14 is braced as by members 16 which form a base for the range and also by an upper transverse member 17. The wrapper and platform are preferably formed of sheet metal and provided with a protective coating of enamel to provide a pleasing appearance.

The platform 11 has horizontal, inwardly-turned supporting flanges 19 along the sides and front edge thereof which are adapted to rest upon and be secured to a complementary flange 21 formed on the upper edge of the wrapper sheet 14.

2

As shown particularly in Figs. 2 and 3, the margin of the range at each of the holes 12 is offset downwardly, as indicated at 22, to provide a shelf on which the surface unit 13 is supported. The surface units are of the readily removable plug-in type and preferably comprise one or more sheathed heating elements 23 coiled to provide a grid on which cooking vessels are placed for heating. A removable reflector pan 24 is mounted in the platform opening and removably supports the grid. The terminal ends 25 of the sheathed elements are disposed below the grid and extend through an opening in one side of the pan. The terminal ends are provided with suitable contacts for detachable engagement with contacts 26 of a terminal receptacle 27 for connecting the heating elements to a source of power when the surface unit is installed in the platform. It will be understood that the heating grid and pan are readily removable for cleaning.

The rear of the range body is closed by means of a vertical panel 28 inserted into the range body before placing the platform 11 thereon and secured in any suitable manner, as by sheet metal screws 29, against the inner surfaces of the rear flanges 15 of the wrapper sheet.

It has generally been the practice in the past to install the range controls as well as the wiring therefor, after the platform and back panel have been mounted on the range body. Since ranges are usually assembled on a continuously moving conveyor, the speed at which the conveyor can travel is to a large extent determined by the time required to install the electrical apparatus. It is a main feature of the present invention that the installation of the wiring and controls can be made at stations separate from the assembly conveyor and thereby expedite assembly of the range. The controls and wiring are mounted on the under surface of the range platform and on a separate rear panel so that installation and servicing of the controls and wiring is facilitated.

As shown particularly in Fig. 3, the surface unit terminal receptacles 27 are secured to the range platform by means of brackets 31, spot welded to the depending flanges 22 at the platform openings before the platform is enameled. By securing these brackets to these flanges instead of directly to the under surface of the platform, crazing of the enamel is prevented.

The surface units are connected to a source of power by controls, which may comprise multiposition switches 32 for selectively connecting the heating elements in circuits of different voltages to provide different degrees of heat. These

switches are also mounted on the platform, as by means of angle brackets 33 (Fig. 3) secured to the front flange 19 of the range platform. Each switch is provided with an adjusting shaft 34 adapted to extend through an opening 35 in the front wall of the wrapper sheet, as shown in Fig. 3, when the platform is placed on the range body. After the platform is in place on the range body, a knob 36 is secured to the projecting end of each shaft. These knobs may be provided with suitable indicia for indicating the degree of heat obtained for each setting of the knobs.

The terminal receptacles 27 are connected to the switches 32 by means of conductors 37, which may be fixed to the range platform by means of one or more wire-supporting and spacing blocks 38 of electrical insulating material secured, as by means of screws 39, to the range platform.

Supply conductors 41 connected to each of the switches extend to the rear of the range platform and are supported under the platform 11 by means of wire-spacing insulating blocks 42 carried by brackets 43 spot-welded to the platform flange 19. The supply conductors 41 terminate in loops 44 or other convenient connecting means so that they may be readily connected to main supply conductors when the platform is assembled on the range body, as will appear hereinafter.

The platform is also provided with a pilot light 45 visible through an opening in the backsplasher and having terminal straps 46 and 47. Neutral wire N of the conductors 41 is connected to the terminal strap 47. This pilot light is connected in a circuit to indicate when the oven heating elements are energized.

While the range has been shown adapted for use with a three-wire system, it is to be understood that this is by way of illustration only since the invention is adapted for use with other supply systems. For convenience, the supply conductors 41 are indicated L_1, L_2 and N corresponding to the conventional designation of the conductors of a three-wire supply system.

From the above description, it will be clear that the switches 32, terminal receptacles 27, oven pilot light 45, and the wiring therefor may be applied to the platform at a station or bench separate from the assembly conveyor. This arrangement permits the bench to be designed for the convenience of the worker, thereby increasing his or her efficiency, and also decreases the time required to install the electrical apparatus on the range at the assembly line. Further, since the electrical apparatus is mounted on the under surface of the platform, as shown in Fig. 2, the bench worker can rapidly install the apparatus. When servicing of the range is necessary, it is a simple matter to remove the platform and expose all of the apparatus mounted thereon.

The rear panel 28 is also wired before inserting it in the range. This panel carries an oven temperature control 49 as well as main supply conductors 51 and conductors 52 for the oven heating elements (not shown).

The rear panel is provided with a terminal block 53 to which supply leads from a three-wire system are connectable. The main supply conductors 51, also identified as L_1, L_2, and N, extend upwardly from this terminal block through an insulating, wire-spacing block 54 fixed to the rear surface of the panel to adjacent the upper end of the panel 28 and terminate in loops for convenient connection.

The oven control 49 may be any preferred type and is here shown as of the hydraulic type having a capillary tube 56 provided with a bulb (not shown) located in heat exchange relation to the oven. The oven control is adjusted to provide desired oven temperatures by means of a rod 57, Fig. 1, extending through and journaled in the front wall of the range and provided with an adjusting knob 58, shown by broken lines in Fig. 2. The surface unit controlling knobs 36 and the oven control knob 58 are preferably disposed in line across the upper front of the range.

The oven control has two load terminals 59 and 60, and two line terminals 61 and 62. The load terminals 59 and 60 are connected by conductors 52 to the oven heating element. The two line terminals 61 and 62 are connected to the main supply conductors L_1 and L_2. It will be understood that the oven heating element conductors 52 are connected to the oven heating element after the rear panel 28 has been inserted in the range body, a suitable opening 63 providing access to the terminals of the oven heating element.

In assembling the range, the back panel 28 is first inserted into the range body through the open top thereof with the electrical apparatus referred to above assembled, thereon, and is then secured to the flanges 15 by means of the screws 29. The adjusting shaft 57 may conveniently be attached to the oven control after the rear panel is in place.

The wired range platform 11 is then placed on top of the range body and secured in place, as by means of screws 64. In placing the platform on the range body, the switch shafts 34 are inserted in the openings 35 of the range body, after which the knobs 36 are attached. It is then a simple matter to connect the wires L_1 and L_2 of the platform supply conductors 41 to the wires L_1 and L_2 of the main supply conductors 51, this connection conveniently being made at the line terminals 61 and 62 of the oven control as shown in Fig. 1. The neutral wire N of the main supply conductors 51 is connected to the terminal strap 47 of the pilot light. The other terminal strap 46 of the pilot light is connected to the load terminal 59 of the oven control.

The range surface units 13 may be installed by merely inserting them into their respective platform openings and plugging their contacts into the terminal receptacles 27, either before or after assembling the platform to the range body.

The range 65 illustrated in Figs. 4 and 5 differs from the range 10 in that surface unit switches 66 and their control knobs 67, as well as the oven control knob 68, are carried by the backsplasher of the platform 11. By positioning controls on the backsplasher, considerably less wire is required for connecting the surface units to the main supply conductors, as is apparent from an inspection of Fig. 5.

The construction of the body and platform of the range 65 may be identical with that of the range 10 and it is to be understood that platform 11 and back panel 28 are pre-wired before assembling them on the range body 14.

The switches 66 are fixed in any suitable manner to the rear of the backsplasher with their adjusting shafts projecting through suitable openings (not shown) to the front face of the backsplasher and provided with knobs 67.

As in the case of the range 10, the terminal receptacles 27 for the range surface units are connected by conductors 69 to the switches 66 and one or more wire spacing blocks 39 are provided

for fixing the conductors to the under surface of the platform.

The switches are in turn connected by platform supply conductors 70, designated as L_1, L_2 and N, to corresponding wires of the main supply conductors 51. This connection is the same as in the case of the range 10 except that a common terminal 71, carried by an insulating block 72 fixed to the rear panel 28, has been provided for connecting the neutral wires N of the conductors 70 and 51 as well as one lead 73 from a pilot light 74. The other lead from the pilot light is connected to load terminal 75 of the oven control 79. The terminals 75, 76, 77, and 78 of the oven control are connected, respectively, to conductors 52 and the main supply conductors L_1 and L_2.

While the oven control 79 may be identical with the control 49 of the range 10, the adjusting rod 57 is replaced by a sheave 81 which is driven by a cable 82 trained over the sheave and a second sheave 83 journaled on the backsplasher and rotated by means of the control knob 68.

While we have shown our invention in several forms, it will be obvious to those skilled in the art that it is not so limited, but is susceptible of various other changes and modifications without departing from the spirit thereof, and we desire, therefore, that only such limitations shall be

placed thereupon as are specifically set forth in the appended claim.

What we claim is:

A range comprising a body, a platform removably mounted on top of said body, a surface unit mounted in said platform, a switch mounted on said platform for controlling said surface unit, conductors carried by and mounted on the under side of said platform and connecting said switch to the heating unit, supply conductors connected to the line terminals of said switch and extending to a point adjacent the rear of the platform, a vertical panel mounted on the back of said body, an oven control switch mounted on said rear panel, said oven switch having line terminals and load terminals connectible respectively to a source of electricity and the heating elements of the oven of the range, and supply conductors mounted on said rear panel and connected to said line terminals of said oven switch; whereby the supply conductors carried by said platform and said panel may be respectively mounted thereon before said platform and said panel are mounted on the range body; the supply conductors mounted on said platform being connected to the line terminals of said oven switch.

ALFONS BARNSTEINER.
EDWIN H. LOCKWOOD.