B. FORD.

SECONDARY OR STORAGE BATTERY.

APPLICATION FILED DEC. 29, 1911.

1,068,641. Patented July 29, 1913.

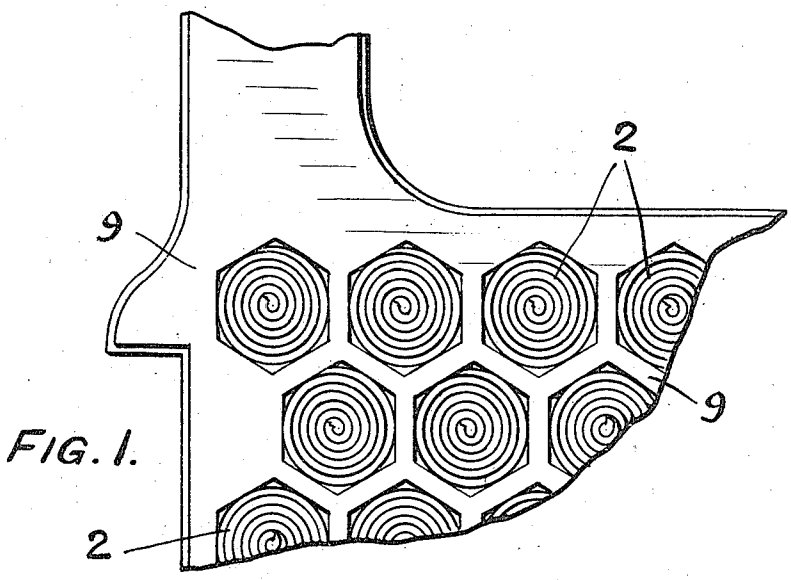

FIG. 1.

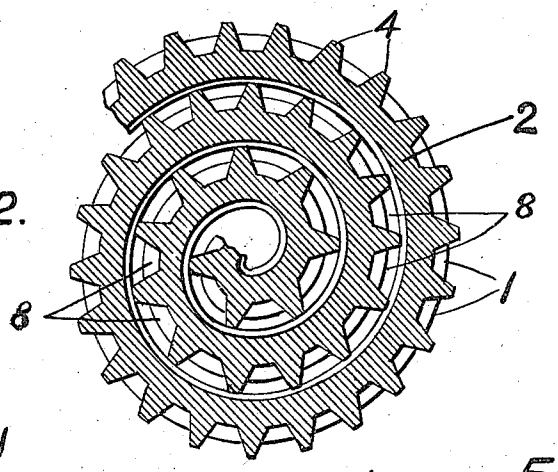

FIG. 2.

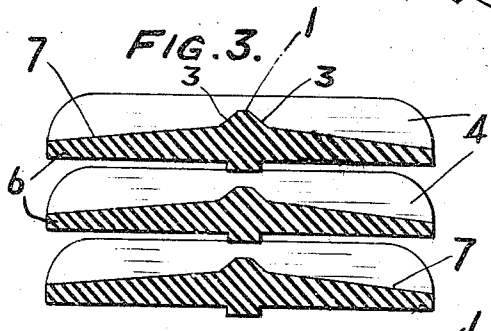

FIG. 3.

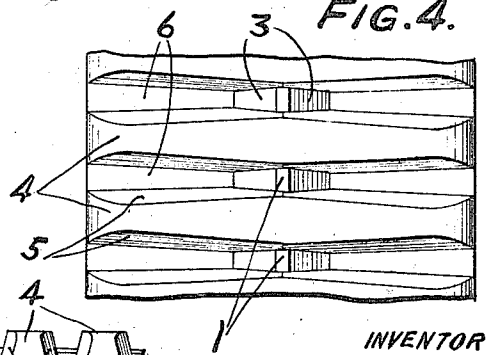

FIG. 4.

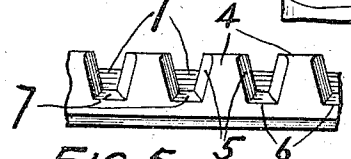

FIG. 5.

WITNESSES:

Robt. R. Stitcher.

Frank E. Ranch

INVENTOR

Bruce Ford

BY Augustus B. Stoughton

ATTORNEY.

UNITED STATES PATENT OFFICE.

BRUCE FORD, OF PHILADELPHIA, PENNSYLVANIA.

SECONDARY OR STORAGE BATTERY.

1,068,641. Specification of Letters Patent. Patented July 29, 1913.

Application filed December 29, 1911. Serial No. 668,480.

To all whom it may concern:

Be it known that I, BRUCE FORD, a citizen of the United States, and a resident of Philadelphia, in the county of Philadelphia and State of Pennsylvania, have invented certain new and useful Improvements in Secondary or Storage Batteries, of which the following is a specification.

This invention relates to improvements in plates consisting of pieces of ribbed lead tape rolled upon themselves in the form of buttons or plugs and inserted in appropriate holes or openings in an inactive frame or grid and it is concerned more particularly with the form of the tape.

The principal object of the present invention is to cause the button or plug under conditions of use to clear the interstices between its windings of sediment which, if permitted to remain, would cause the button or plug to swell or expand and burst the grid or frame.

The invention will be claimed at the end hereof, but will first be described in connection with the accompanying drawings, in which—

Figure 1, is a view of a part of a plate of the kind to which the invention relates. Fig. 2, is a transverse sectional view of a plug or button embodying features of the invention and taken parallel with the face of the plug or button and drawn to an enlarged scale. Fig. 3, is a sectional view taken radially of the button. Fig. 4, is a top or plan view of the tape, and Fig. 5, is an edge view of the tape.

The lengthwise rib of the lead tape tapers (Figs. 3 and 4) from the center toward the faces of the button 2, as at 3. The transverse rib 4 tapers (Figs. 4 and 5) from the center toward the face of the button 2, as at 5. The portions 6, of the body of the tape between the crosswise ribs tapers as at 7. The cavities, interstices or spaces 8 formed when the tape is coiled upon itself each have tapering walls and increase in cross section from the center outward toward the faces of the plate. The result of this is that when the buttons are mounted in openings in the frame 9 and are subjected to use they tend to expel from their interstices sediment which if permitted to remain would cause the buttons, or some of them, to swell and burst the frame or grid 9.

What I claim is:

1. In a storage battery plate the combination with an inactive frame or grid of a button consisting of a coil of lead tape provided with transverse ribs and having the body portion of the tape between the transverse ribs tapering from the center to the faces of the button.

2. In a storage battery plate the combination with an inactive frame or grid of a button consisting of a coil of lead tape having ribs tapering from the center toward the faces of the button and having the body portions between the ribs tapering from the center toward the faces of the button.

3. In a storage battery plate the combination with an inactive frame or grid of a button consisting of a coil of lead tape having transverse ribs tapering from the center of the tape toward the faces of the button.

4. A storage battery plate consisting of the combination of a grid provided with openings and buttons consisting of coils of tape having between them interstices of which the cross-section increases from the center toward the faces.

In testimony whereof I have hereunto signed my name in the presence of two witnesses.

BRUCE FORD.

Witnesses:
S. E. PATTERSON,
FRANK E. FRENCH.

Copies of this patent may be obtained for five cents each, by addressing the "Commissioner of Patents, Washington, D. C."