April 14, 1959 A. L. JOHNSON 2,881,726

APPARATUS FOR PRODUCTION OF TUBULAR STUDS AND THE LIKE

Filed Feb. 8, 1956 9 Sheets-Sheet 1

Fig. 1

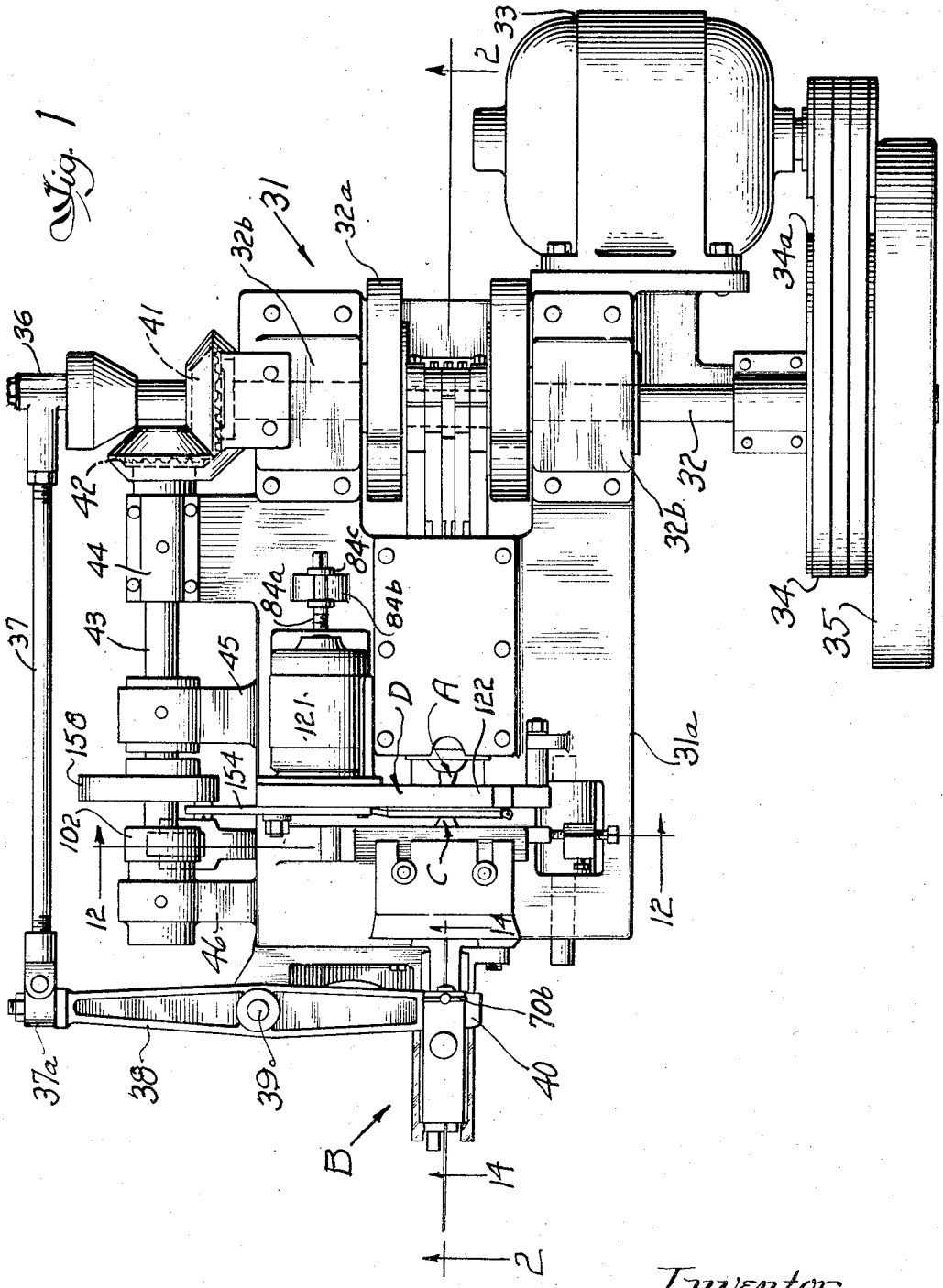

Inventor,
Andrew L. Johnson
By: Jones, Jesch & Darbo,
Attys.

April 14, 1959 A. L. JOHNSON 2,881,726

APPARATUS FOR PRODUCTION OF TUBULAR STUDS AND THE LIKE

Filed Feb. 8, 1956 9 Sheets-Sheet 2

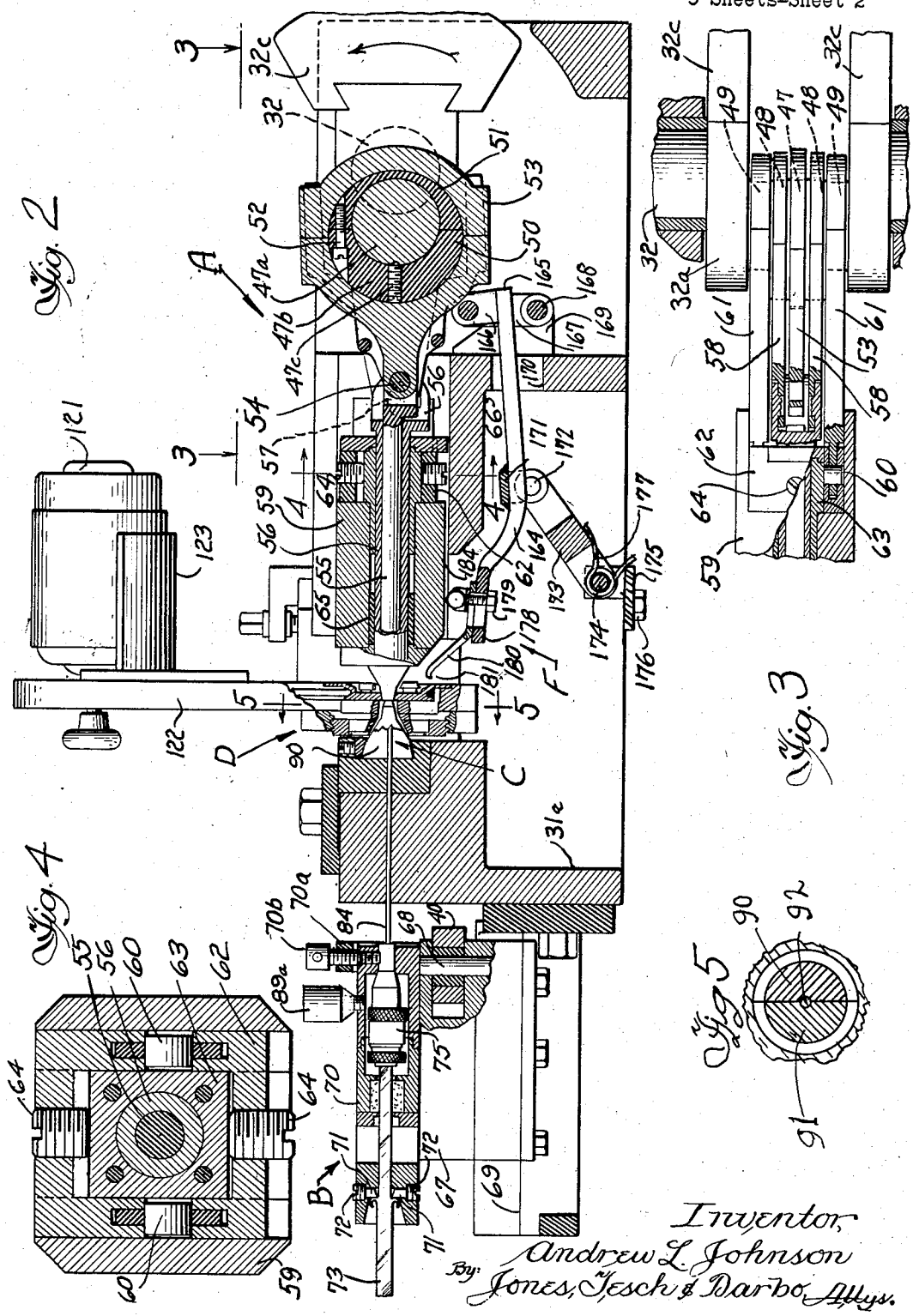

Fig. 2

Fig. 3

Fig. 4

Fig. 5

Inventor,
Andrew L. Johnson
By: Jones, Jesch & Darbo, Attys.

April 14, 1959 A. L. JOHNSON 2,881,726

APPARATUS FOR PRODUCTION OF TUBULAR STUDS AND THE LIKE

Filed Feb. 8, 1956 9 Sheets-Sheet 3

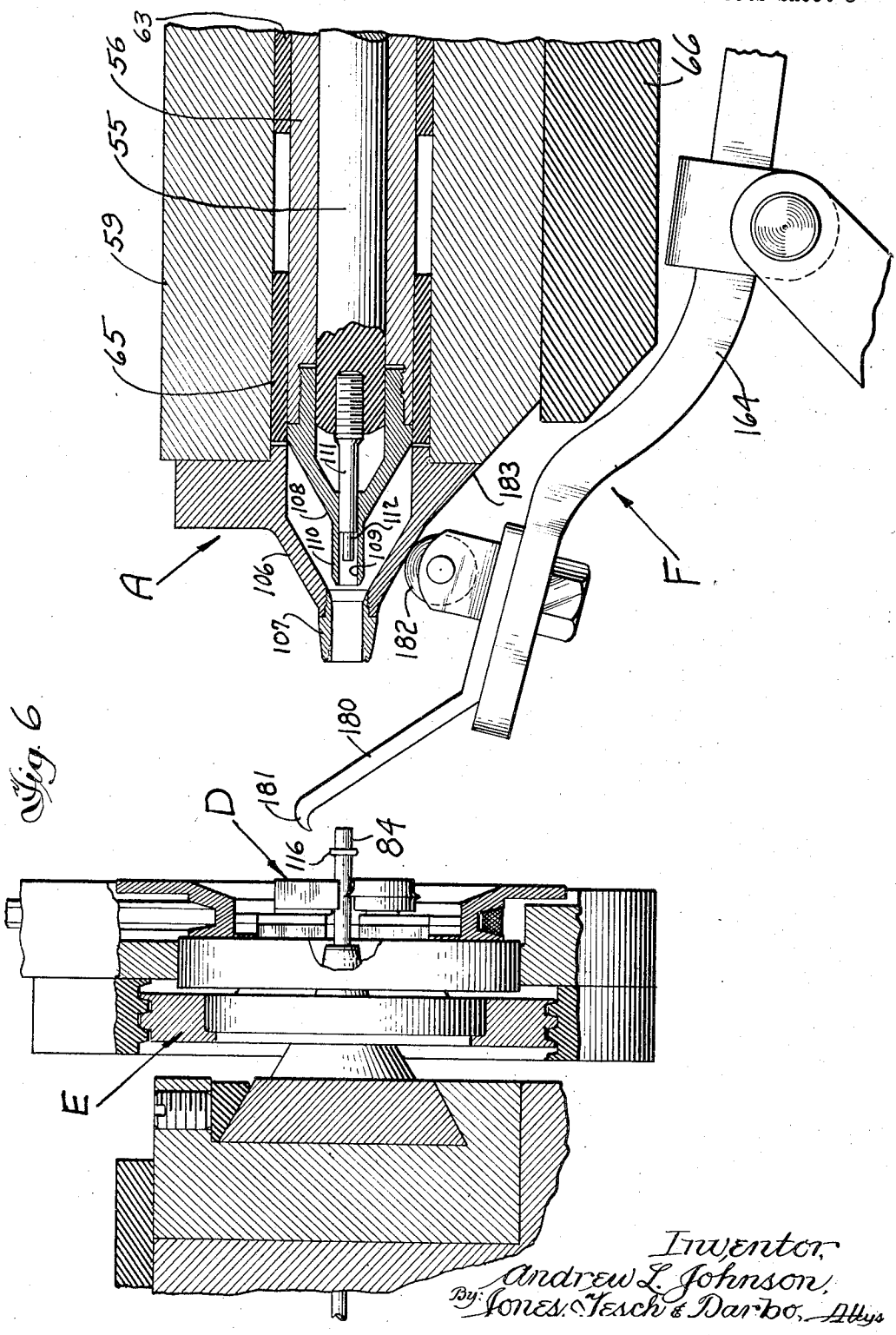

Fig. 6

Inventor,
Andrew L. Johnson,
By: Jones, Tesch & Barbo, Attys

April 14, 1959 A. L. JOHNSON 2,881,726

APPARATUS FOR PRODUCTION OF TUBULAR STUDS AND THE LIKE

Filed Feb. 8, 1956 9 Sheets-Sheet 4

Fig. 7

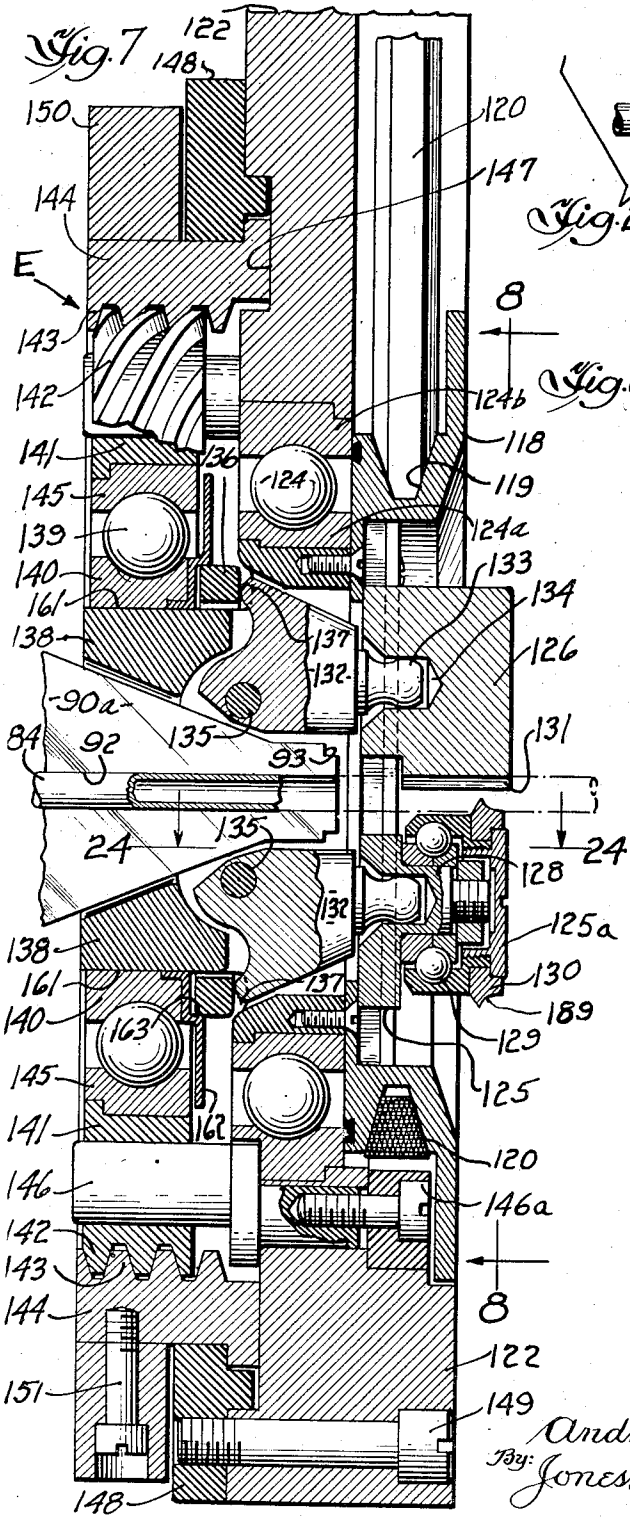

Fig. 22

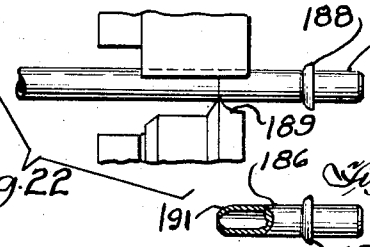

Fig. 21

Fig. 8

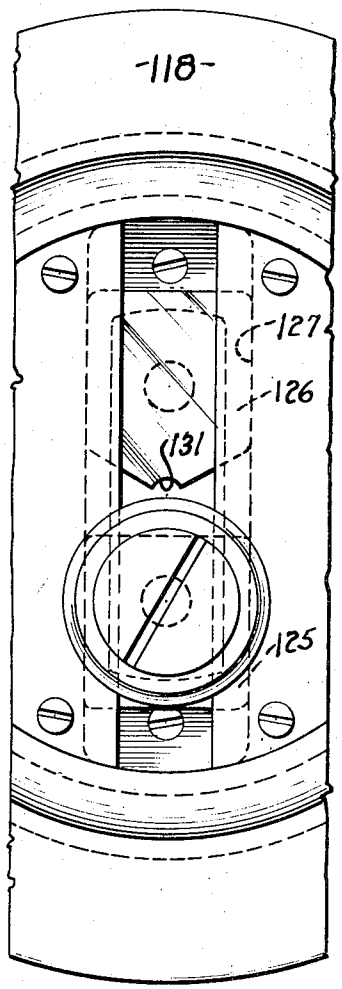

Inventor
Andrew L. Johnson
By: Jones, Tesch & Barbo,
Attys.

April 14, 1959 A. L. JOHNSON 2,881,726

APPARATUS FOR PRODUCTION OF TUBULAR STUDS AND THE LIKE

Filed Feb. 8, 1956 9 Sheets-Sheet 5

Fig. 9

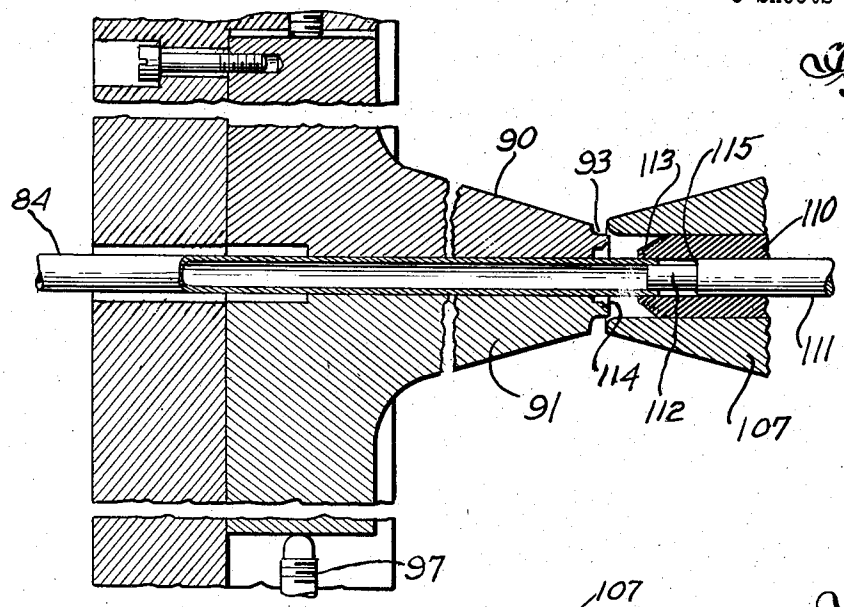

Fig. 10

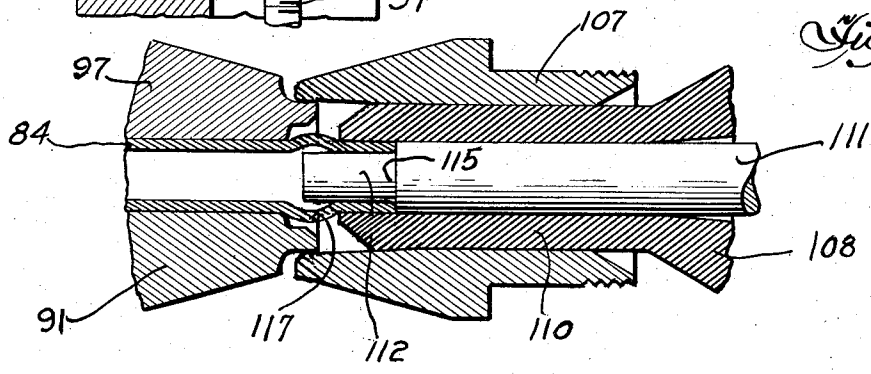

Fig. 11

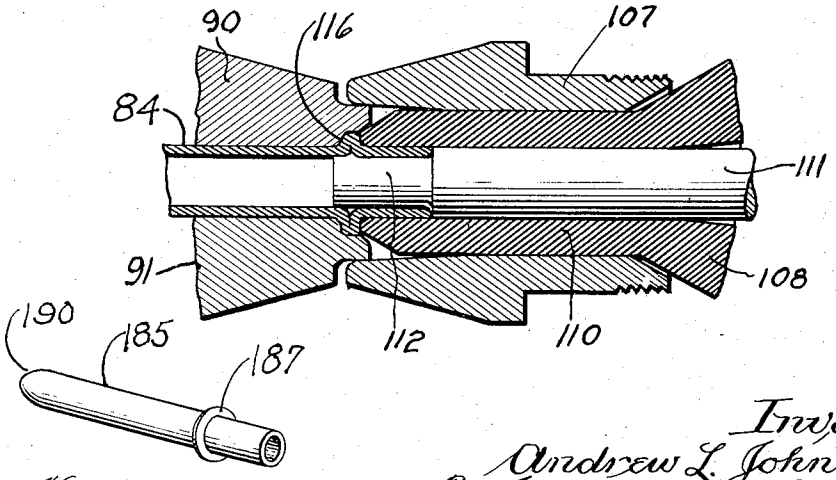

Fig. 20

Inventor,
Andrew L. Johnson
By: Jones, Jesch & Darbo,
Attys.

April 14, 1959 A. L. JOHNSON 2,881,726

APPARATUS FOR PRODUCTION OF TUBULAR STUDS AND THE LIKE

Filed Feb. 8, 1956 9 Sheets-Sheet 6

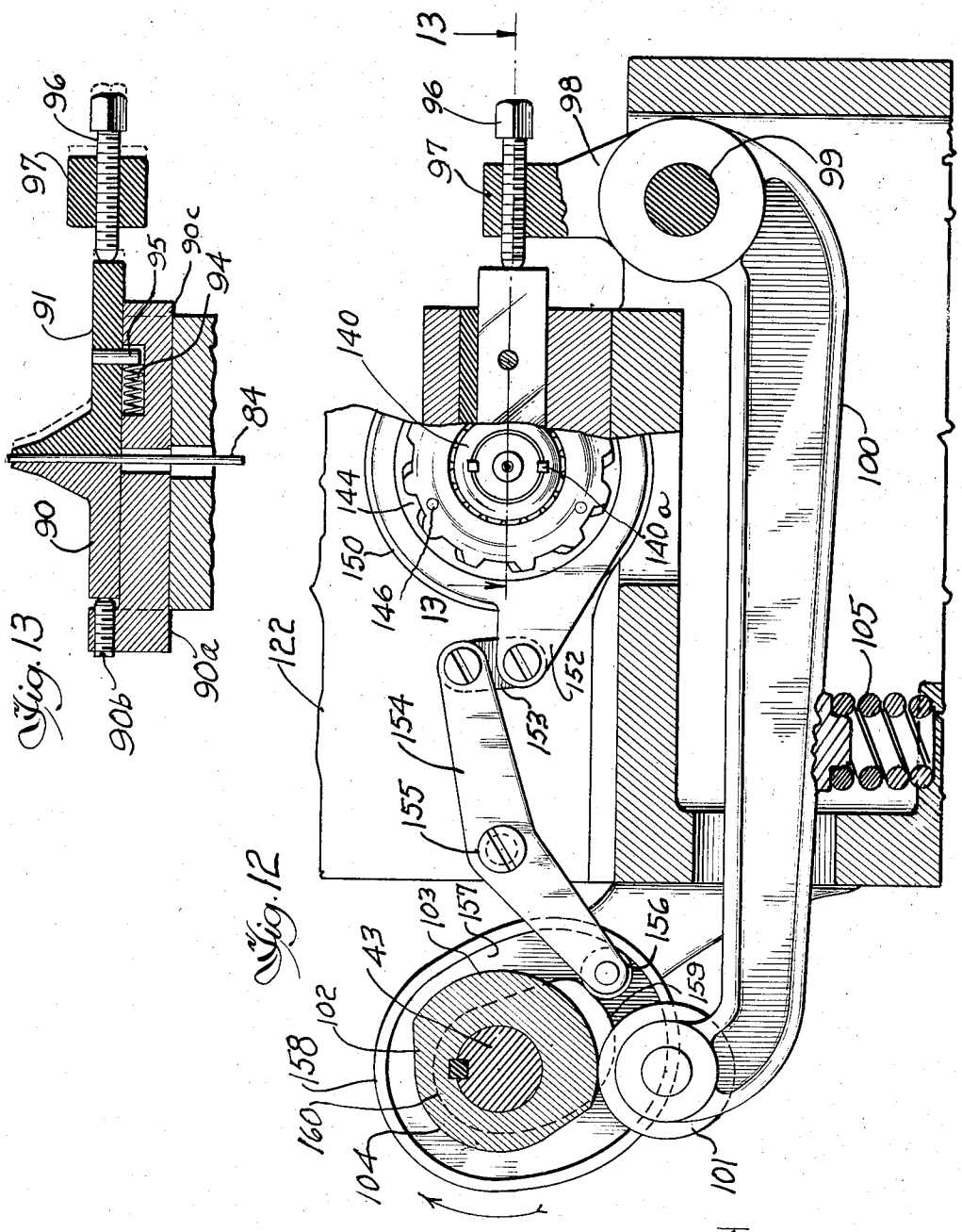

Fig. 13

Fig. 12

Inventor,
Andrew L. Johnson,
By: Jones, Jesch & Darbo, Attys.

April 14, 1959 A. L. JOHNSON 2,881,726

APPARATUS FOR PRODUCTION OF TUBULAR STUDS AND THE LIKE

Filed Feb. 8, 1956 9 Sheets-Sheet 7

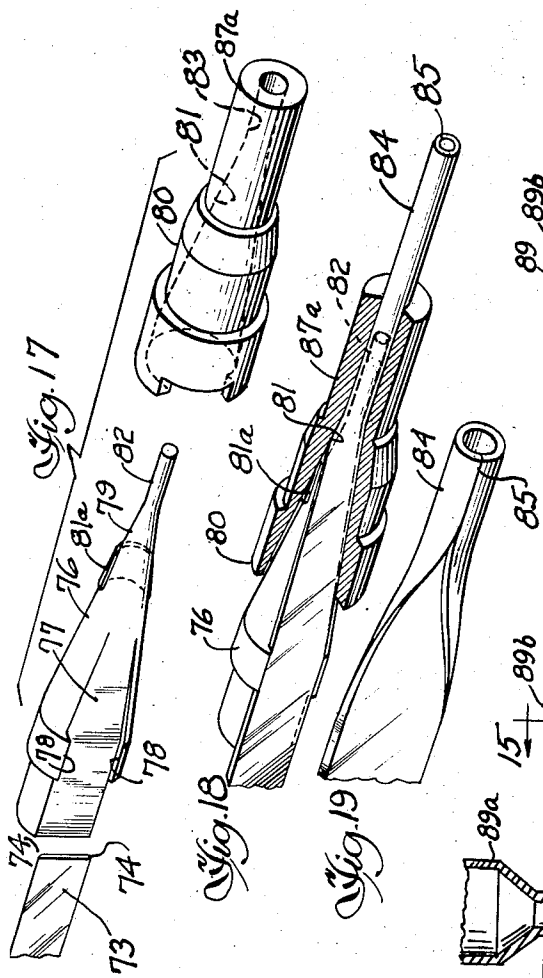

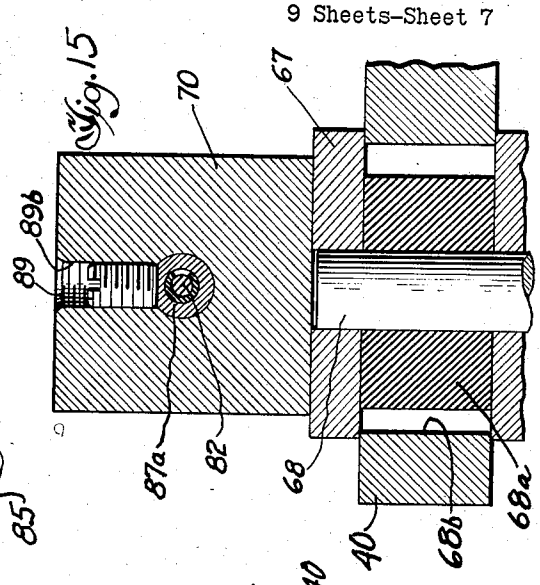

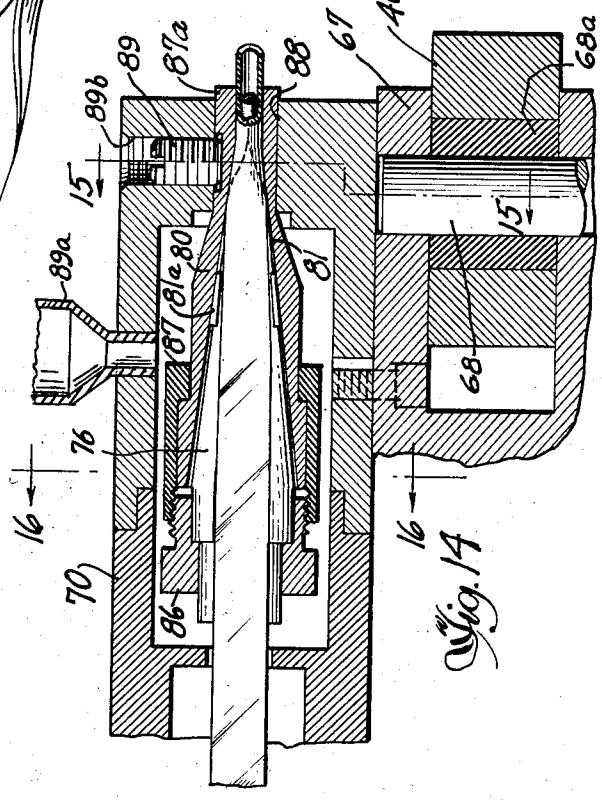

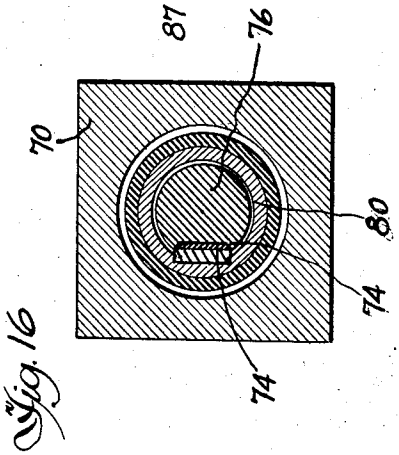

Inventor,
Andrew L. Johnson
By: Jones, Jesch & Barbo,
Attys.

April 14, 1959 A. L. JOHNSON 2,881,726

APPARATUS FOR PRODUCTION OF TUBULAR STUDS AND THE LIKE

Filed Feb. 8, 1956

9 Sheets-Sheet 8

Fig. 24

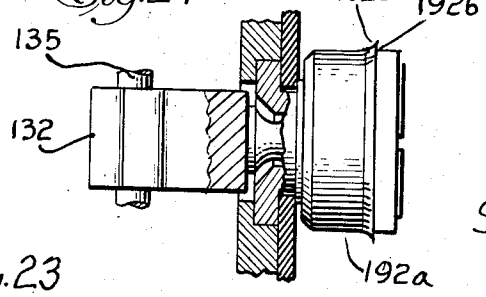

Fig. 25

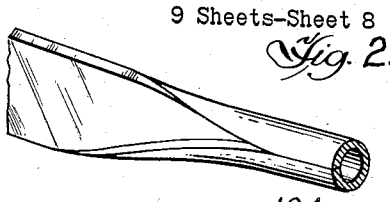

Fig. 26

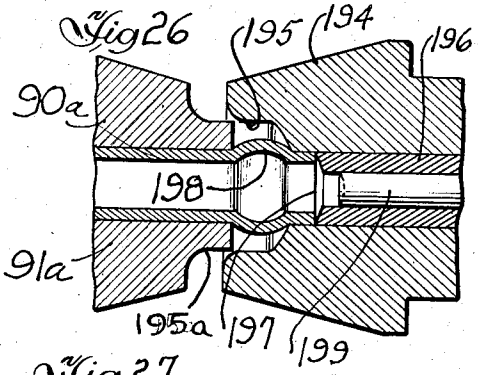

Fig. 23

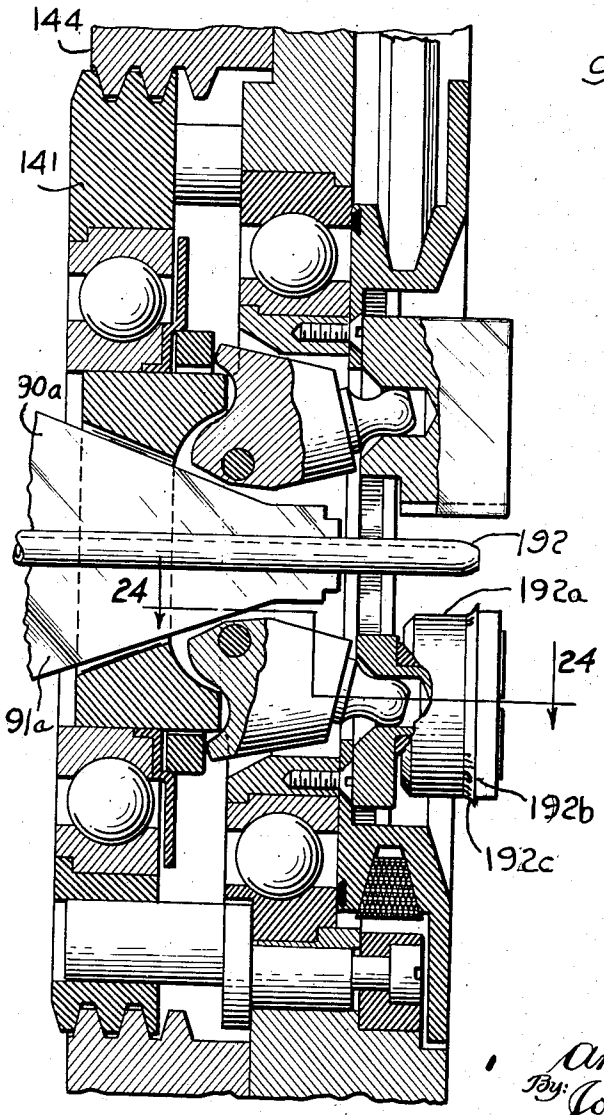

Fig. 27

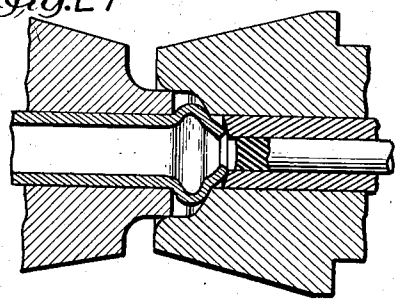

Fig. 28

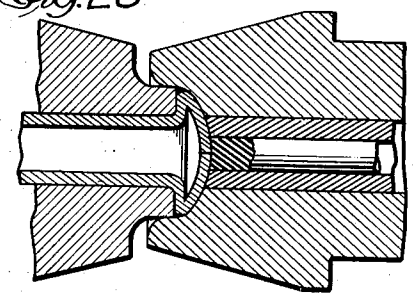

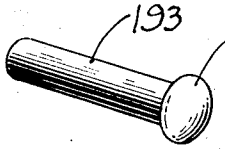

Fig. 29

Inventor
Andrew L. Johnson
By: Jones, Tesch & Darbo
Attys.

April 14, 1959 A. L. JOHNSON 2,881,726

APPARATUS FOR PRODUCTION OF TUBULAR STUDS AND THE LIKE

Filed Feb. 8, 1956 9 Sheets-Sheet 9

Fig 30

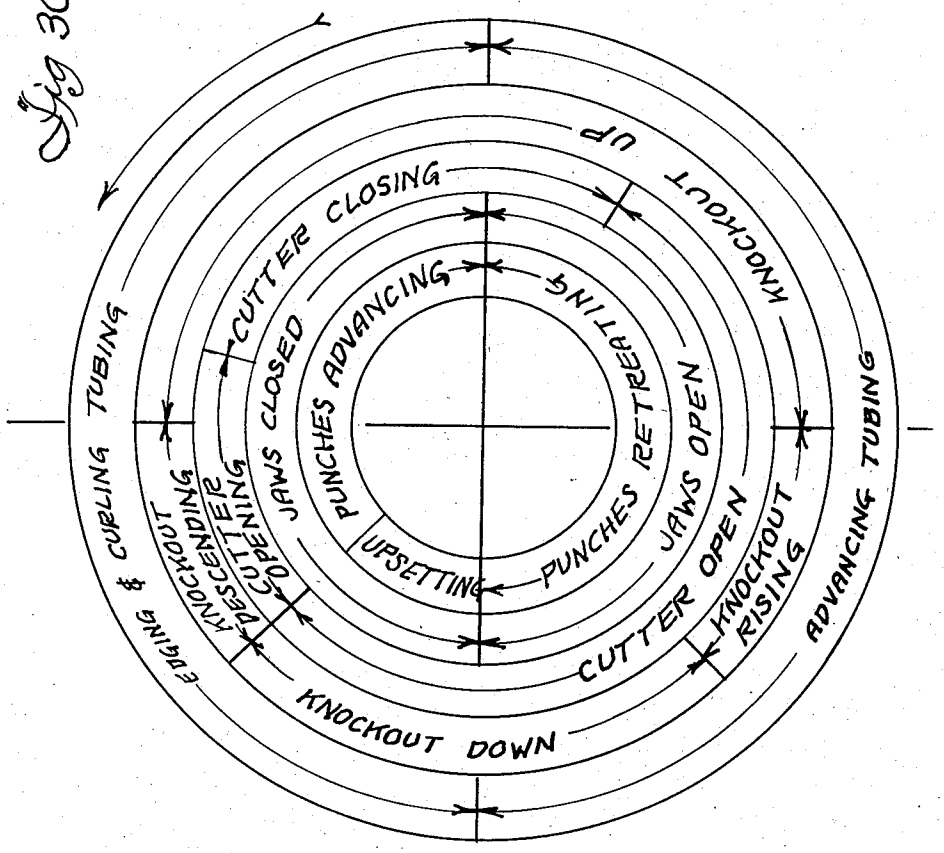

Inventor,
Andrew L. Johnson
By Jones, Tesch, & Darbo
Attys.

United States Patent Office 2,881,726 Patented Apr. 14, 1959

2,881,726

APPARATUS FOR PRODUCTION OF TUBULAR STUDS AND THE LIKE

Andrew L. Johnson, Skokie, Ill.

Application February 8, 1956, Serial No. 564,246

9 Claims. (Cl. 113—1)

This invention relates to the production of tubular studs or the like and embraces an apparatus for making said studs.

Heretofore, studs or the like, which term includes, as here used, electrical contact pins, terminals, jacks, sleeves, rivets, eyelets, grommets and such articles, have generally been made either by turning and drilling solid stock or by a stamping and deep drawing operation, either of which are expensive and sometimes prohibitively so. Suggestions have been made for forming such parts from light-gauge flat stock, but such suggestions have not been carried out successfully from the standpoint of economy of apparatus and simplicity of operation.

The present invention aims to provide a relatively simple and economical apparatus for producing such tubular parts from flat stock continuously and rapidly so as to minimize markedly the cost of operation, including the amount of space occupied by the apparatus and necessary labor in connection therewith.

In an important aspect, the invention contemplates the provision of a relatively continuous strip of stock material, continuously curling the strip into a tube, and successively shearing the tube adjacent the leading end thereof to provide a severed segment sufficient for the stud or the like. It is to be understood that the word "continuously," as here used, includes a step by step or stop and go movement.

In another aspect of the invention, a shoulder is formed by an upsetting operation on the segment just before said shearing operation.

In still another aspect, the curling of the strip to a tube and the upsetting of the tube to form a shoulder are performed while the tube is at a standstill and the edge of the strip is trimmed simultaneously with the curling step, during which time the severing operation is being performed, including an alternate stop and go advance of the tube.

These and other objects and advantages will be more fully explained, and the invention will be understood, by reference to the accompanying drawings, showing an illustrative embodiment of apparatus following the invention and of illustrative process steps, and in which drawings—

Figure 1 is a general plan view of the apparatus;

Figure 2 is an enlarged longitudinal vertical section taken on the line **2—2** of Fig. 1;

Figure 3 is a fragmentary plan view partly in section of parts shown in Figs. 1 and 2;

Figure 4 is an enlarged cross-section on the line **4—4** of Fig. 2;

Figure 5 is a fragmentary and enlarged cross-section on the line **5—5** of Fig. 2;

Figure 6 is an enlarged view, partly in section, of parts shown in Fig. 2 in different positions;

Figure 7 is an axial section of parts shown in Fig. 6, on a larger scale;

Figure 8 is a fragmentary front view of parts shown in Fig. 7;

Figure 9 is an enlarged view, in cross-section, rotated 90°, of the holding jaws and punch plungers shown in Fig. 2, in their initial engagement with the tube;

Figure 10 shows the parts just referred to in a further stage of engagement;

Figure 11 shows them in a final stage of engagement for the formation of a said segment;

Figure 12 shows operating mechanism for the jaws and cutter, being a cross section taken on the line **12—12** of Fig. 1;

Figure 13 is a partial plan section on the line **13—13** of Fig. 12;

Figure 14 is an enlarged longitudinal vertical sectional view of parts shown in Fig. 2, being a section taken on the line **14—14** of Fig. 1, but omitting the clamping means;

Figure 15 is a cross section taken on the line **15—15** of Fig. 14, but omitting the grease cup;

Figure 16 is a cross section taken on the line **16—16** of Fig. 14;

Figure 17 is a perspective view in separated relation of parts shown in Fig. 14;

Figure 18 is a similar perspective view in assembled relation;

Figure 19 is a view of the tube in the process of forming, the tube being shown rotated 180° from that of Figs. 17 and 18;

Figure 20 is a perspective view of a completed electrical contact pin made by the method and apparatus here disclosed;

Figure 21 is a somewhat similar view of a shorter contact pin;

Figure 22 shows the arrangement of a tube segment and the cutters for the shorter contact pin of Fig. 21;

Figure 23 is a view similar to Fig. 7 but showing a slightly different cutter for making rivets, this figure also showing an alternative position of the cuter parts from that shown in Fig. 7;

Figure 24 is a fragmentary cross section on line **24—24** of Fig. 23.

Figure 25 is a view similar to Fig. 19 illustrating the forming of the tube for the rivet similar to the forming of the tube for the contact pin;

Figure 26 shows a first step in the forming of a rivet head;

Figure 27 shows an intermediate step in forming the rivet;

Figure 28 shows the final step in forming the rivet;

Figure 29 shows the completed rivet; and

Figure 30 is a timing cycle diagram for the apparatus, the sequences being shown in a counterclockwise direction.

Referring in detail to the illustrative construction shown in the drawings, numeral **31** indicates the apparatus or machine in general having a base **31*a*** upon which is carried the main drive shaft **32**, mounted as by bearings **32*b***, and which is driven by an electric motor, such as **33**, also mounted on base **31*a***, through a belt drive **34** and pulley **34*a***, the main shaft having a fly wheel **35** mounted at one end thereof. At its other end the main shaft **32** carries a crank **36** that by a pitman **37** is connected as at **37*a*** to the lever **38** that is intermediately pivoted as at **39** on the base **31*a***, the lever **38** having another end **40** later more particularly referred to.

In accordance with the present invention, the main shaft **32** carries intermediately thereof a bevel gear **41** that meshes with another bevel gear **42** pinned on the countershaft **43** mounted in suitable bearings such as **44**, **45** and **46**, rigid with the base **31*a***. Also intermediately the main shaft **32** carries thereon rigid therewith a system of eccentrics **47**, **48** and **49** (Fig. 3). Each of these eccentrics, as best seen in Fig. 2 is made up of two parts, the eccentric **47** there seen comprising the crank element **47*a*** and the eccentric element **47*b*** keyed

thereto as at 47*c*. The crank element extends rigidly between the crank blocks 32*a* which are in turn rigid with the main shaft 32 and carry inertia extension 32*c*. The eccentric element 47*b* is shown made up of two somewhat semi-cylindrical hollow parts 50 and 51 which are secured together about the eccentric element 47*a* by the screw 52. The eccentric 47 cooperates with the eccentric strap 53 that is articulated as at 54 with a central plunger 55 of the reciprocating tube upsetting punches of the machine and plungers therefor collectively indicated by A. The central plunger 55 reciprocates in a hollow plunger 56 that is articulated as at 57 with the eccentric straps 58 that cooperate with the eccentrics 48, one on each side of the central eccentric 47 and its strap 53. Similarly the hollow plunger 56 reciprocates in a plunger guide 59 that in turn is articulated as at 60 with the eccentric straps 61 that cooperate with the eccentrics 49, one on each side of each of the eccentrics 48 and straps 58. As best seen in Figs. 2, 3 and 4, the articulation 60 is made through the intermediation of a yoke 62 that is held to a core 63 by set-screws 64, the core 63 having a force fit in the plunger guide 59 and acting as a bushing for the reciprocation therein of the hollow plunger 56, there being another mating bushing 65 adjacent the distal end of the plunger guide 59. The plunger guide 59 travels back and forth on the track 66, and with it the hollow plunger 56 and the central plunger 55, each on a different stroke or throw under the influence of its respective eccentric already described, the degree of travel and the time of movement of the plungers and plunger guide being latter described.

Reverting to the lever 38, the end 40 thereof is in operative relation with a work feed mechanism that is also an edging and curling mechanism indicated generally by the letter B that slidingly reciprocates alternately with the upsetting punches A, that is to say that when the punches A are advancing the mechanism B is retreating, and vice versa. The mechanism B includes a sliding carriage 67 that is articulated with the end 40 of the lever 38 by a pivot pin 68 and the carriage reciprocates, under the influence of the lever 38, on the track 69 rigid with the frame 31*a* of the machine. Pivot pin 68 may have lost motion on elongated bushing 68*a* in the slot 68*b* of the lever end 40 (Fig. 15). Carried on the sliding carriage 67 is the shuttle casing 70 that is clamped to the carriage 67 by strap 70*a* and tension screw 70*b* and that has a passageway therethrough for the tubing stock being worked upon. At the outermost or rear end of the passageway and projecting thereinto are a pair of knives 71 adjustable by set screws 72, the knives being opposed and arranged to trim the edges of the flat strip stock 73 of brass or the like which constitutes the work in its initial form. The flat stock may be drawn from a coil thereof carried by a reel which need not be here shown. The knives 71 put a bevel on the strip 73 as shown at 74 (Figs. 16 and 17) so that when the strip is later curled into tube form these edges 74 will be swedged coplanarly together. At its inner end the shuttle casing 70 carries the forming curler mechanism 75 therein for curling the flat strip 73 into a tube. As best seen in Figs. 14 to 19 the forming curler mechanism 75 includes an inner tapered mandrel 76 that has a flat surface 77 receiving the edged strip 73 between guide flanges 78 that snugly lap the trimmed edges edges 74 of the strip and permit the latter to slide therethrough toward the forward reduced end 79 of the mandrel. The mandrel 76 is invaginated in the curler funnel 80 that has a tapering bore 81 receiving the mandrel 76 with just enough space to permit the strip 75 to advance therethrough between the mandrel and the curler tube and to be continuously curled into cylindrical or tubular form. Spacer piece 81*a* centers the mandrel in the funnel. The mandrel 76 has a straight nose 82 that cooperates with the cylindrical bore part 83 of the bore of the curler funnel to lead the formed tube 84 out of the edging and curling mechanism A in tubular form as best seen in Figs. 18 and 19, the formed tubing 84 having the swedged seam 85 (Fig. 18). It will be understood that Fig. 19 is shown rotated 180° with respect to Fig. 18 for clearness of description. Gland screw 86 and internally threaded nipple 87 hold the mandrel and curling funnel in assembly and the latter are together mounted in the passageway of the shuttle casing, the cylindrical portion 87*a* of the curling funnel snugly passed through the cylindrical aperture 88 in the inner or forward end of the shuttle casing 70 and clamped therein by set-screw 89. Clamping screw 70*b* may also seat in the opening 89*b* for set screw 89. Lubricant cup 89*a* is shown mounted on the casing 70.

When the machine is started up with a new strip of material the mechanism B is dissassembled temporarily and the strip has its edges trimmed off for a foot or two manually and the end of the strip is then curled up sufficiently to go through the aperture of the curling funnel without the curling mandrel therein. The end protruding through the curling funnel is manually gripped and held while the mechanism B is moved back over the strip, thus forming a few inches of rough curled tube. Then the mandrel is inserted in the curling funnel and the mechanism B is reassembled and the tubing pulled therethrough to form about a foot of perfect tube as at 84. The tubing thus more or less manually formed is then inserted into the gripped jaw mechanism indicated generally by the letter C.

The gripper jaw mechanism C includes a pair of complementary jaws 90 and 91 which are exteriorly somewhat conical in shape. The jaws 90 and 91 have the joint bore 92 (Fig. 5) therethrough for the passage of the tube 84 that is aligned with and between the curling sleeve end 87*a* and the central plunger 55. The jaws at their advance or forward ends (Fig. 9) are decreasingly tapered and have a reduced shoulder termination 93 that cooperates with the plunger guide of the plunger mechanism A as presently more particularly described.

The jaw member 90 is semi-permanently adjustable (Fig. 13) on the mounting piece 90*a* by set screw 90*b*, while the jaw member 91 is movably mounted on its mounting piece 90*c*. In one phase of the machine operation, the jaws 90 and 91 are separated by the action of a coil spring 94 pressing on a stud 95 carried by the jaw 91, sufficiently so that the tube 84 is not gripped by the jaws. In another recurring interval of the cycle of operation, the jaw member 91 is forced toward the jaw member 90 against the force of spring 94 to grip the tube 84, this action being performed by the pressure screw 96 that is adjustably carried by the lever arm 97 of a bell crank lever 98 that is pivoted at 99 on the frame 31*a* and has another longer arm 100 that carries a roller cam follower 101. Roller cam follower 101 is under the influence of a cam 102 pinned on the countershaft 43 that is driven by the main shaft 32 as previously described. The cam 102 has a cam rise 103, which, when the roller 101 is riding thereon, rocks the bell crank lever 98 and through pressure screw 96 causes the gripper jaws 90 and 91 to grip the tube 84. This occurs during alternate halves of the cycle of operation of the machine. Movements of the bell crank 98 for the other half-cycles are associated with the cam depression 104 of the cam 102 and the fact that while the roller 101 is riding on 104, the bell crank 98 is permitted to rock on its axis 99, urged by the compression coil spring 105, to retract the pressure screw 96 so that the jaws 90 and 91 are separated by the spring 94.

When the jaws 90 and 91 are closed and thus gripping the tube 84 and holding the latter stationary, the edging and curling mechanism B is moving rearwardly under the influence of the lever 38 relatively to the material strip 73 so that the strip is pulled therethrough by the jaws to edge the strip and also to curl a section thereof into the tube 84. During the alternate half cycle of

operation of the machine, that is, when the jaws **90** and **91** are open, the mechanism B is moving forwardly under the influence of the lever **38** and because of the intimate contact of the curled tube with the curler of the mechanism B the formed curled tube **84** is moved forwardly with respect to and through the jaws **90** and **91**.

When the gripper jaws are holding the tubing stationary, at which time the edging and curling mechanism B is moving rearwardly to perform its function, a sufficient extent of the tube **84** extends forwardly of the gripper jaws to be acted upon by the upsetting plunger mechanism A. The extent of the tube which projects forwardly of the gripper jaws may be initially adjusted manually by adjusting a cutter mechanism D presently more particularly described, this being done by means of a threaded stud **84***a* that is screwed into the mechanism D and that passes rotatably through a lug **84***b* and that has a pair of rigid collars **84***c* that hold it against axial movement. When the operation is first started, as previously described, by rotating the stud **84***a* the mechanism D, which is slidable on the machine bed may be adjusted rearwardly or forwardly for this purpose.

Reverting to the punch mechanism A (Fig. 6), the reciprocable plunger guide **59** terminates at its distal end in a hollow conical head piece **106** which is pointed by a guide ferrule **107** that is arranged (see Figs. 9, 10 and 11) to telescope onto the forward end of the joint gripper jaws, and over the jointly cylindrical reduced termination **93** thereof, the latter being snugly received within the plunger ferrule **107** when the tube upsetting action takes place. Similarly, the plunger barrel **56** which reciprocates within the plunger guide **59** terminates in a hollow conical punch carrier **108** that has a bore **109** and a punch **110** that moves through the ferrule **107**. The central plunger **55** carries a die pin **111** that moves in the bore **109** of the punch carrier and thus in the punch **110** and has a reduced cylindrical extremity **112** that cooperates with the punch **110** and also with the ferrule **107** to act upon the tube. As the upsetting punch system A approaches the advance end of the tube, as shown in Fig. 9, the pin extremity **112** enters the open end of the tube, while, at the same time, the punch **110** telescopes onto the tube, guided by the ferrule **107**. The hollow punch member **110** has a reduced end **113** that enters the counterbore **114** in the gripper jaws. Just before this occurs, however, the end of the tube **84** is abutted by the shoulder **115** of the die pin **111**, and, since the tube is held by the jaws from retractive movement, the shoulder **115** and the reduced end **113** together form or upset into the counterbore **114** an annular shoulder **116** on the tube **84** as seen in Fig. 11. In the intermediate step shown in Fig. 10, in which the bulge of the tube to form the shoulder **116** is begun, indicated as at **117**, the material of the hub flows into the counterbore **114** of the jaws. It will be understood that the respective throws of the eccentrics **47**, **48** and **49** for the plungers of the punch mechanism A are suitably arranged to provide the movements just indicated.

As soon as the steps of Figs. 9, 10 and 11 are completed, occupying a very short time interval, the next arc of rotation of the main shaft **32** retracts the punch mechanism A and advances the edging and curling mechanism B, while at the same time releasing the gripper jaws C. This results in the tube **84** advancing through the machine and through the gripper jaws to the position shown in Fig. 6.

Immediately at the end of this advance movement of the tube a cutter mechanism D comes into play to cut off the upset section of tube which has the shoulder **116**. As best seen in Fig. 7 the cutter mechanism D includes a constantly rotating wheel or rotor **118** that has a peripheral sheave groove **119** therein in which is trained a belt **120** that is driven by the separate electric motor

121, the motor **121** being mounted on a support **122** carried by and above the machine frame **31***a*, the support having a bracket **123** for the motor. The rotor **118** rotates on an axis that is coincident with tube **84** about the gripper jaws **90** and **91** on anti-friction bearings, one series of ball bearings being indicated at **124**, having the inner race **124***a* that rotates with the wheel **118** and the outer race **124***b* that is stationary with the support **122**. Radially movably mounted on the face of the wheel **118** are a pair of cutter elements **125** and **126**. These cutter elements **125** and **126** are radially slidable in a diametric slot **127** in the face of the wheel **118**. Cutter element **125** carries a rotating knife holder **125***a* which rotates with respect to cutter element **125** on spindle **128** through the intermediation of ball bearings **129**, the spindle **128** itself rotating with the rotor **118**. The knife holder **125***a* has secured thereon a circular knife blade **130** that cooperates with a groove **131** in the cutter element **126** to transversely cut the tube **84**, cutter element **126** acting as a pallet for the blade.

To move the cutter elements **125** and **126** toward each other inwardly radially of the rotor **118**, against the action of centrifugal force, these cutter elements are each controlled by a pivoted dog **132**. The dogs **132** carry cam knobs **133** at their forward ends that loosely enter recesses **134** in the rear faces of the cutter elements respectively. The dogs **132** are transversely pivoted at **135** respectively in the rotor **118** and are swingable at their knob ends upon these pivots toward and away from the axis of the wheel. This movement of the dogs is responsive to movement of the axially sliding clutch ring **136** that abuts cam lug formations **137** that project radially outwardly of the dogs respectively. That is to say, when the clutch ring **136** is moved axially forwardly (to the right in Fig. 7) the dogs are rotated on their pivots to move the cutter elements radially inwardly to the position shown in Fig. 7 and Fig. 8, to cut the tube, while, when the clutch ring **136** is free to move axially rearwardly, the cutter elements, under the action of centrifugal force, move radially outwardly so as not to be in cutting position. It will be understood that during its cutting action, the circular knife blade **130** revolves under the influence of friction between it and the tube **84**.

The clutch ring **136** is under the control of a nut-and-screw drive mechanism E that encircles the hub **138** of the rotor **118** and is carried thereon through the intermediation of ball bearings **139** that also serve as bearings for the rear end or hub of the rotor. The inner race **140** for these ball bearings **139** is slidably mounted on the hub **138** of the rotor **118** as well as rotating therewith, it being understood that the rotor is hollow on its forward face to accommodate the dogs and cutter elements, and that the hub **138** is also hollow to pass the gripper jaws **90** and **91** thereinto and into a position suitably spaced at their forward ends from the blade **130**, and in which position, when the cutter elements are moved radially outwardly, the upsetting punches A can reach the advanced tube end.

The nut-and-screw clutch mechanism E includes a hollow screw **141** that has external large pitch threads **142** that are in mesh with the internal threads **143** of a nut member **144** that has limited rotation as presently described. Hollow screw **141** does not rotate but moves axially, as presently explained, with the outer race **145** for the ball bearings **139** which outer race is axially slidable together with the inner race **140** while like screw **141** being non-rotatable. The annuli **141**—**145** have limited axial sliding movement on studs **146** (held by screws **146***a*) that project rearwardly from the cutter wheel support **122**, such sliding movement being in response to rotation of the nut member **144** as next described.

For the purpose of actuating the clutch ring **136**, the clutch drive nut member **144** may be partially rotated, but without moving it axially, on the rotor support **122**, the latter being grooved on its rear face as at **147** to re-

ceive the edge of the nut member and in which groove the nut member is rotatively secured by the keeper ring **148** which is held to the support **122** by bolts **149**. The clutch drive nut **144** is banded by an oscillatable member **150** secured to the nut **144** as by bolt **151** and having an offset lug portion **152** (Fig. 12) which is articulated, by the link **153**, with the rocking lever **154** that is pivoted medially at **155** on the support **122**. The other end of the lever **154** carries a cam roller **156** that rides in a cam groove **157** in the face of a cam plate **158** that is pinned on and driven by the cam shaft **43** that drives also the cam member **102**. The cam groove **157** is somewhat elliptical and the cam plate **158** is mounted eccentrically on the shaft **43** so that the cam groove has a high point indicated at **159** and a low point indicated at **160**. When the cam groove **157** is at its high point **159** with respect to the cam roller **156**, the follower end of the lever **154** is depressed as shown in Fig. 12 and the nut **144** is rotated in a clockwise direction. Rotation of the nut **144** in this direction moves the clutch screw **141** axially to its furthermost position to the right in Fig. 7, as there shown, since a rotating nut, which is held against axial movement, will move axially an intermeshed contained screw, without rotative movement of the screw. In other words, the internal threads **143** of the nut **144** act as a cam, upon the helical threads **142** of the screw **141**, to move the latter axially without rotation of the latter, this movement taking place on the studs **146**, to close the cutter elements **125** and **126** as previously described. Conversely when the cam follower **156** of the lever **154** is riding in the low area **160** of the cam groove **157**, the lever **154** is rocked in the opposite direction and the nut **144** is rotated counterclockwise (Fig. 12), at which time the screw **141** is moved axially on the studs **146** to the left, from the position of Figure 7 to the position shown in Fig. 23, to permit the clutch ring **136** to move axially in the same direction and the cutter elements **125** and **126** to move radially outwardly i.e., to open, under the influence of centrifugal force. It will be understood that this back and forth axial movement of the screw **141** (together with ball races **140, 145**) takes place on the circular interface line **161** between the wheel hub **138** and the inner race **140** for the ball bearings **139**, the race **140** sliding on the hub **138** of the rotor **118**. Inner race **140** rotates with the hub **138** being keyed thereto at **140***a* and being permitted to rotate with respect to the race **145** and screw **141** by reason of the ball bearings **139** interposed between the inner race **140** and the outer race **145** therefor. Clutch ring **136** rotates with the inner race **140**. The clutch ring **136** is centralized with respect to the cam lugs **137** of the dogs **132** by a cage ring **162** abutting the forward face of the inner race **140** and having the annular shoulder **163** abutting the clutch ring **136**. Key **140***a* permits axial movement of inner race **140** on hub **138**, as already described. Simultaneously with the interval of the cycle of operation when the cutter is closing to sever the advance tube end and the upsetting plungers A are fully retracted, as shown in Fig. 6, a knockout arm mechanism F comes into play and which will be next described.

The knockout mechanism F includes a swinging arm **164** that depends at its captive end **165** from a lug **166** that is articulated with a link **167** that is pivoted at its lower end below the lug **166** as at **168** on a pair of brackets **169** projecting from the main frame **31***a* in the vicinity of the main shaft **32** and suitably therebelow, the swinging arm **164** passing through a slot **170** in the frame and being aligned in the vertical plane of the central plunger **55**. Intermediately of its length the swinging arm **164** has riding thereon a strap **171** that is articulated at **172** with a spring link **173** that is pivoted at its other end as at **174** to a bracket **175** bolted as at **176** to a lower part of the frame **31***a*. A torsion spring **177** associated with the pivot **174** and the link **173** urges the latter toward a vertical position which in turn urges the swinging arm **164** upwardly at its distal end, the double hinged support **165** and **167** for the swinging arm permitting a lost motion movement in the latter on its fulcrum **168** that causes the free end **178** of the swinging arm **164** to have a substantially straight line vertical movement, rather than an arcuate movement, under the influence of the spring link **173**. Carried on the free end **178** of the swinging arm **164** as by a longitudinally adjustable bolt and slot connection **179** is a knockout finger **180** that has a curved beak **181**. The attachment **179** also secures to the forward end of the swinging arm an anti-friction roller **182** that rides on the under surface of the plunger guide **59**. At its forward end this plunger guide **59**, by the underface of its conical termination **106**, provides an oblique cam surface **183**, which, when the plunger mechanism A is retracted, permits the swinging arm **164** to rise gradually under the influence of the torsion spring **177**, and with it the knockout finger **180** so that the beak **181** of the latter is brought to a position above the tube **84**, as in Fig. 6.

As soon as the punch mechanism A again begins its advance movement, i.e., moves to the left in Figure 6, and the cutter mechanism D has cut off the upset section of the tube, retrogression of the roller **182** with respect to the cam surface **183** depresses the knockout arm **180**, and its beak **181** knocks off the cutoff section of the tube. As the upset punch mechanism A continues to advance to upset the newly advanced tube end the roller **182** rides on the bottom dwell surface **184** of the upset punch mechanism A and is held below the tube, against the resilience of the torsion spring **177**, until the upset punch mechanism A again retreats and the parts again arrive at the respective positions shown in Fig. 6, preparatory to knocking off the last upset and cutoff section. The knockout arm might not be necessary if the machine were operated slowly but is desirable in high speed production.

Figs. 20, 21 and 22 show terminal contact members (of different lengths), **185** and **186** having the external annular shoulders **187** and **188** thereon respectively and in this instance it will be noted that the circular cutter knife **130** has a blade edge that is hollow ground on its forward face as at **189** to taper inwardly the tail ends **190** and **191** of the contact terminal members **185** and **186**. Differences in lengths of the contact members may be accomplished by adjusting the length of the pitman **37** to vary the amplitude of stroke of the end **40** of the lever **38**.

Fig. 23 shows an alternative position of the cutter mechanism when the cutter elements are in inoperative position under the influence of centrifugal force permitted by retractive movement of the clutch screw **141** as previously explained, but Figure 23 shows also somewhat different expedients for forming a modified tubular stud of rivet form as next described.

In the making of rivets **193**, as shown in Figs. 26 to 29 inclusive, it is desirable that the forward end of the tube, left after a section is cut off, be tapered inwardly, by the cutter knife, as indicated at **192** (Fig. 23). For this purpose the slightly different rotary cutter **192***a* is used having a circular knife blade **192***b* that is hollow ground on its rear face **192***c*. Also for the making of rivets **193** modified jaws **90***a* and **91***a* (Fig. 26) are employed and in this case the plunger guide **194** has a counterbore **195** that receives the reduced ends **195***a* of the jaws. The hollow plunger **196** abuts the end of the tube after the plunger guide **194** has engaged the jaws and forces the partially closed end **192** of the tube farther together as at **197** and at the same time begins to form the bulge **198**, the metal for which is extruded into the counterbore **195**, forced thereinto by the jaws reduced end **195***a* and the hollow plunger **196**. This continues as shown in Fig. 27 until the hollow plunger **196** reaches the counterbore **195**, when the central plunger **199** then advances, as shown in Fig. 28, to close the

turned in end to form the closed head **200** of the rivet **193**, such head being another form of shoulder on the stud as here contemplated.

It will be understood that by suitable adaptations of the apparatus parts other hollow tubular articles such as grommets, eyelets and the like can be made by this same continuous automatic process.

The timing cycle diagram shown in Fig. 30 will be largely self-explanatory and reference thereto will aid in an understanding of the operation of the mechanism and apparatus here disclosed. The apparatus may be usefully operated at a speed of say 1/5 second for one cycle, with a production of finished articles of say, 300 per minute.

In general, it may be summarized, that, when the plunger mechanism A is advancing, the edging and curling mechanism B is retracting, and when the latter is advancing the former is retracting, these movements occurring during alternate half cycles of operation. When the mechanism A is advancing and the mechanism B is retracting, the jaw mechanism C is closed to grip the tube, and when the mechanism A is retracting and the mechanism B advancing, the jaws C are open to permit the tube to be advanced by the mechanism B. The cutter mechanism D is open when the jaws C are open and is closed during a part of the time when the jaws C are closed. The knockout mechanism F rises as mechanism A retracts but before the tube has been sufficiently advanced to be in the way of the rising knockout arm. The knockout mechanism F goes down just as the cutter mechanism D completes the cut and to be out of the way of the next advance of the upsetting mechanism as the latter engages the new tube end.

The invention is not intended to be limited to details of construction shown for purposes of illustration and furthermore it is not essential that all features of the invention be used conjointly since various combinations and sub-combinations may at times be advantageously employed. Such changes may be made as fall within the scope of the appended claims without departing from the invention.

What is here claimed is:

1. Unitary apparatus for forming tubular studs or the like, comprising, in combination with a common supporting structure, curling mechanism for forming a strip of material into a curled tubing, a pair of relatively movable jaws for clamping said formed tubing therebetween, feed mechanism including said curling mechanism for successively by a stop and go movement advancing the tubing toward the jaws, means for clamping the jaws on the tubing and simultaneously retracting the curling mechanism relatively to the tubing, upsetting means cooperating with said jaws for forming a shoulder on said tubing, said upsetting means moving into operation simultaneously with the retractive movement of the curling mechanism, said upsetting mechanism retracting while said curling mechanism is advancing the tubing and the jaws are open, cutter mechanism for cutting off a section of said tubing having the shoulder thereon, knockout mechanism for ejecting said cutoff section, and means carried by the feed mechanism and responsive to retractive movement of the curling mechanism for beveling the edge of the strip preparatory to curling.

2. Unitary apparatus for forming tubular studs or the like, comprising, in combination with a common supporting structure, curling mechanism for forming a strip of material into a curled tubing, a pair of relatively movable jaws for clamping said formed tubing therebetween, feed mechanism including said curling mechanism for successively advancing the tubing toward the jaws, means for clamping the jaws on the tubing and simultaneously retracting the curling mechanism relatively to the tubing, upsetting means cooperating with said jaws for forming a shoulder on said tubing, said upsetting means moving into operation simultaneously with the retractive movement of the curling mechanism, said upsetting mechanism retracting while said curling mechanism is advancing the tubing and the jaws are open, and cutter mechanism for cutting off a section of said tubing having the shoulder thereon.

3. The structure of claim 2 wherein the feed mechanism includes shaving means for forming a beveled edge on each side of the strip during retractive movement of the feed mechanism.

4. The structure of claim 2 wherein the cutter mechanism includes a pair of cutter elements, one constituting a rotating knife blade and the other a pallet for the blade.

5. Unitary apparatus for forming tubular studs or the like, comprising, in combination with a common supporting structure, curling mechanism including a tapered mandrel and curling funnel for forming a strip of material into curled tubing, a vibrating lever for reciprocating the curling mechanism, a pair of relatively movable jaws for clamping said formed tubing therebetween, mechanism including said lever for successively advancing the tubing toward the jaws by a stop and go movement, means including a countershaft for clamping the jaws on the tubing, a main shaft for driving the countershaft and vibrating the lever, upsetting means driven by said main shaft cooperating with said jaws for forming a shoulder on said tubing, said upsetting means being driven through eccentrics by said main shaft and moving into operation simultaneously with the retractive movement of the curling mechanism, said upsetting mechanism retracting while said feed mechanism is advancing the tube and the jaws are open, cutter mechanism actuated by said countershaft for cutting off a section of said tubing having the shoulder thereon, a rotor carrying said cutter mechanism, and a separate drive for the rotor.

6. In unitary apparatus for producing tubular studs or the like, the combination with a common supporting structure, said structure carrying mechanisms for curling a strip of material to form a continuous tubing and for simultaneously upsetting the advance end of the tubing respectively, of a rotor carried by said structure, a hollow ring support therefor, anti-friction bearings for the rotor in said ring, a diametric slot in the rotor, a pair of cutter elements radially movable in the slot, a pair of dogs transversely pivoted in said rotor, said dogs each having a knob portion loosely entering a recess in the rear face of the cutter elements respectively, a cam projection on each dog, a clutch ring rotatable with the rotor and movable axially thereon, a hollow screw carried in the support abutting the clutch ring, studs on the support carrying said hollow screw for axial movement, a nut encircling said hollow screw and threadedly meshed therewith, said nut being held against axial movement but arcuately movable on said support, means for rotating the rotor and means for partially rotating the nut to move the screw axially to bring the cutter elements toward each other by the screw swinging said dogs to move the cutter elements radially toward each other.

7. The structure of claim 6 wherein the rotor revolves about a pair of relatively movable jaws axially received in the rotor, access to said jaws being provided at the face of the rotor when the cutter elements move apart radially under the influence of centrifugal force when the clutch ring is not forcibly moved axially against said dogs.

8. The structure of claim 6 wherein the screw drive of said screw and nut drive mechanism is actuated by a cam and lever connection with the feed drive.

9. In unitary apparatus for high speed forming of tubular studs or the like from flat strip material, a horizontally elongated base supporting said apparatus, horizontally reciprocating mechanism carried at one end of the base for curling the strip into a tubing, horizontally reciprocating mechanism carried at the other end of the base for upsetting the advance end of the tubing to form a shoulder thereon, mechanism for simultaneously moving the said mechanisms on the base in the same direction where-

by the strip is curled while the shoulder is formed, means for cutting off the upset end of the tubing at the end of the movement of the curling mechanism in the opposite direction, and power means for actuating said apparatus including said mechanisms.

References Cited in the file of this patent

UNITED STATES PATENTS

1,817,215	Taylor	Aug. 4, 1931
1,878,640	Miner	Sept. 20, 1932
1,885,648	Wilcox	Nov. 1, 1932
2,168,853	Abbey	Aug. 8, 1939
2,177,104	Gonser	Oct. 24, 1939
2,260,891	Ekstedt et al.	Oct. 28, 1941
2,262,178	Gest et al.	Nov. 11, 1941
2,290,184	Higgins	July 21, 1942
2,326,660	Kosha	Aug. 10, 1943
2,373,531	Bertalan	Apr. 10, 1945
2,437,477	Parkin et al.	Mar. 9, 1948
2,568,439	Friedman	Sept. 18, 1951
2,619,174	Neale	Nov. 25, 1952
2,688,297	Livermont et al.	Sept. 7, 1954
2,809,697	Menzies	Oct. 15, 1957