Nov. 4, 1941. A. N. HANSON ET AL 2,261,761

CONTACTING FIXTURE

Filed June 12, 1940 2 Sheets-Sheet 1

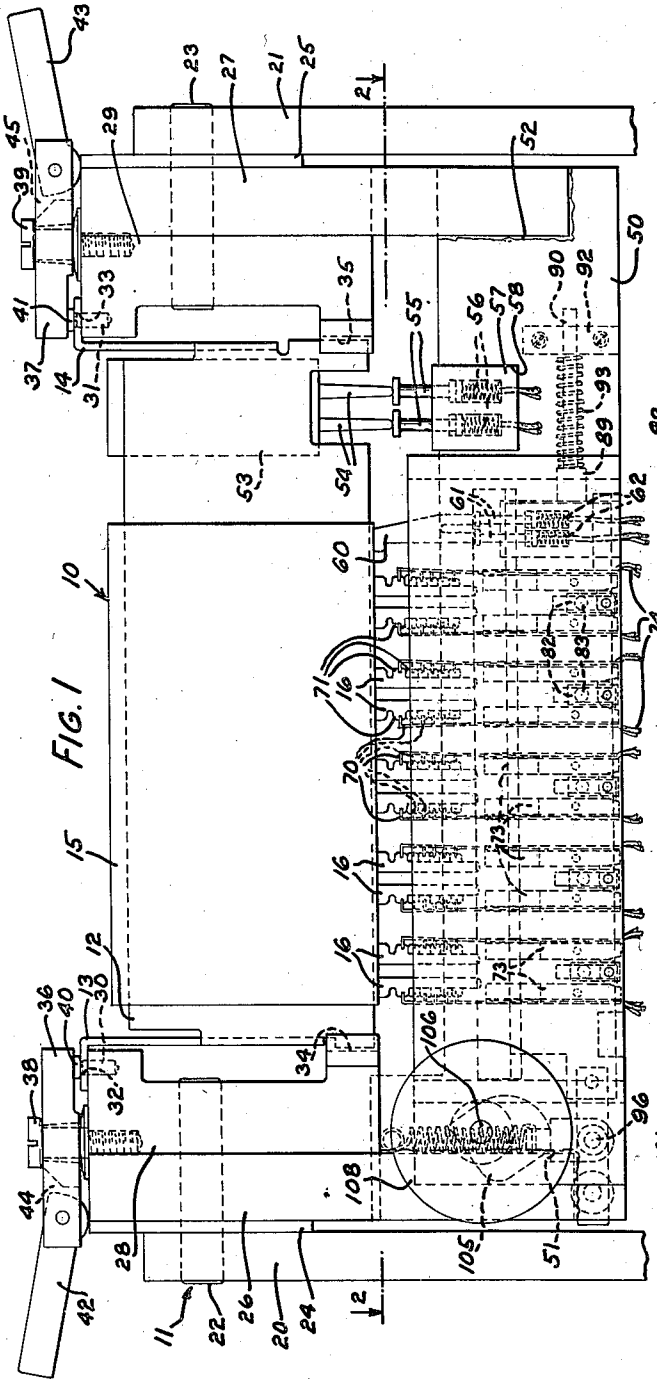

FIG. 1

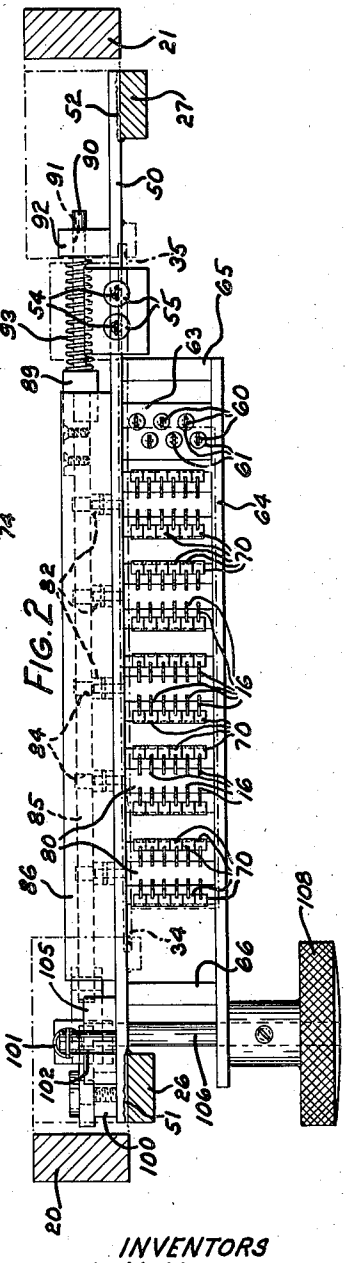

FIG. 2

INVENTORS
A. N. HANSON
S. F. WARNER
BY Emery Robinson
ATTORNEY

Nov. 4, 1941. A. N. HANSON ET AL 2,261,761

CONTACTING FIXTURE

Filed June 12, 1940 2 Sheets-Sheet 2

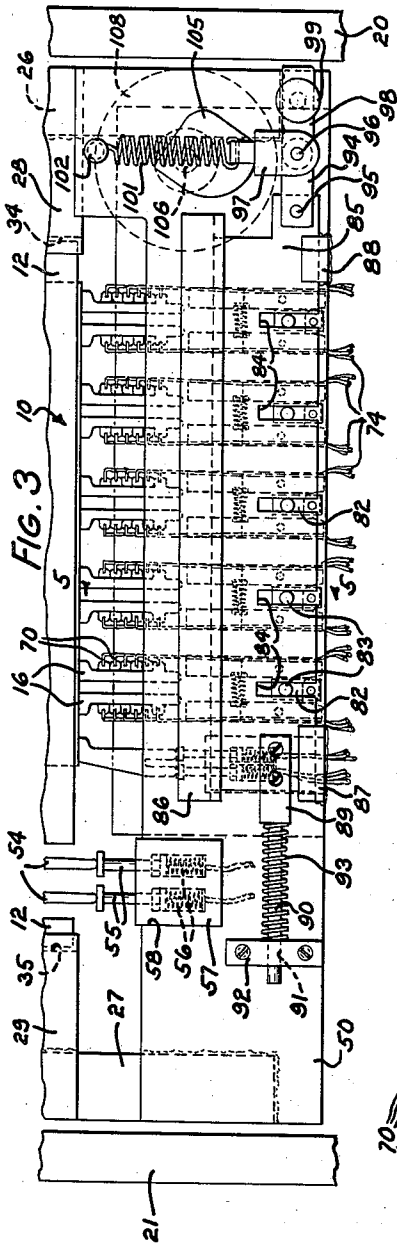

FIG. 3

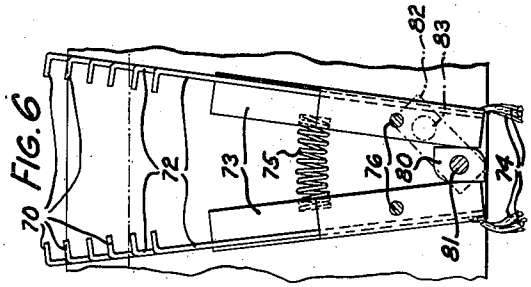

FIG. 6

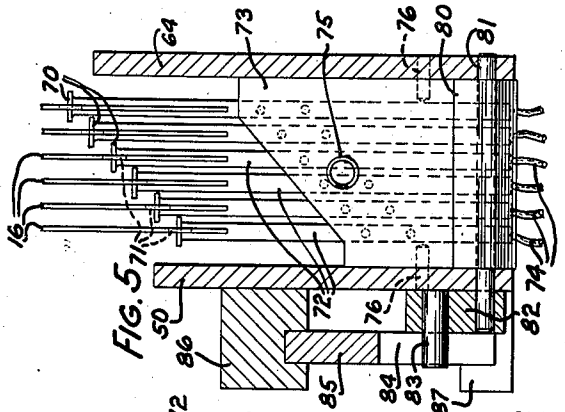

FIG. 5

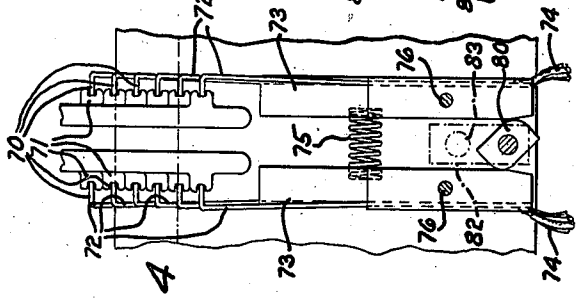

FIG. 4

INVENTORS
A. N. HANSON
S. F. WARNER
BY Emery Robinson
ATTORNEY

Patented Nov. 4, 1941 2,261,761

UNITED STATES PATENT OFFICE

2,261,761

CONTACTING FIXTURE

Arvid N. Hanson, Hinsdale, and Stanley F. Warner, Forest Park, Ill., assignors to Western Electric Company, Incorporated, New York, N. Y., a corporation of New York

Application June 12, 1940, Serial No. 340,146

5 Claims. (Cl. 173—328)

This invention relates to contacting fixtures and more particularly to fixtures for interconnecting the terminals of electrical apparatus with testing mechanisms.

In the manufacture of electrical apparatus, and particularly automatic telephone apparatus, numerous tests are made of the telephone apparatus in the course of its manufacture, and since, in some types of telephone apparatus, there are numerous contacts closely positioned with respect one to another, it becomes difficult to provide fixtures which will engage all of the contacts extending from a piece of apparatus to interconnect the piece of apparatus with a testing mechanism. It is to the solution of this problem that the present invention is directed.

It is an object of the present invention to provide a simple contacting mechanism for interconnecting electrical apparatus with apparatus designed to make tests on the electrical apparatus.

In accordance with one embodiment of the invention as applied to a contacting mechanism for engaging the terminals of telephone cross bar switch vertical units, during the adjustment thereof, a fixture is provided for clamping a vertical unit in position to be adjusted. On this fixture, there are provided a series of plunger type contacts for engaging some of the terminals of the vertical unit. The other terminals of the unit which extend from the apparatus in rows positioned in one plane and arranged in echelon in another plane are simultaneously gripped between cooperating knife-edged contacts, which are mounted in groups, and each group is pivoted as a group and normally held apart but are adapted upon a rotation of a manually actuated hand wheel to be cammed tightly against all of the contacts arranged in rows and echelon. The knife-edged contacts are connected by suitable wiring to any suitable testing apparatus so that tests may be made on the vertical unit while it is being adjusted.

A better understanding of the invention will be had by reference to the following detailed description when considered in conjunction with the accompanying drawings, wherein

Fig. 1 is a front elevational view of a contacting mechanism or fixture for interconnecting a cross bar switch unit's contacts with a testing apparatus and is illustrative of the present invention;

Fig. 2 is a vertical sectional view taken substantially along the line 2—2 of Fig. 1 in the direction of the arrows showing the top view of the knife-edged contacts engaging the terminals of the vertical unit;

Fig. 3 is a fragmentary rear elevational view of the mechanism shown in Fig. 1 in front elevation and shows the mechanism for actuating the knife-edged contacts;

Fig. 4 is a fragmentary elevational view showing, in detail, two sets of oppositely disposed knife-edged contacts engaging the terminals of a vertical unit;

Fig. 5 is an enlarged fragmentary sectional view taken substantially along the line 5—5 of Fig. 3 in the direction of the arrows, and

Fig. 6 is a fragmentary detail view similar to Fig. 4 with the knife-edged contacts shown in their open position and with no vertical unit in place in the fixture.

Referring to the drawings, wherein like reference characters designate the same parts throughout the several views, particular reference being had at this time to Fig. 1, wherein there is shown a cross bar switch vertical unit, designated generally by the numeral 10, and clamped in place in a fixture. The vertical unit 10 comprises a frame 12, from which there extends a pair of mounting arms 13 and 14, and on which there are mounted a plurality of contact springs. Since an understanding of the arrangement and construction of the contact springs is not essential to an understanding of the present invention, the contact springs have been shown positioned within a casing 15 and having their terminal ends 16 extending outwardly from the casing. When the vertical unit 10 is mounted in the fixture 11, the casing 15 is removed and the contact springs are thus uncovered so that the tension of them may be adjusted within the desired limits by an operator utilizing the apparatus forming the subject matter of this invention. The contact springs have not been shown in detail since the invention is directed primarily to the means for supporting the vertical unit 10 during the adjustment of these contact springs and the means for interconnecting the terminal ends 16 of the springs with the testing circuits.

The fixture 11 comprises a pair of end members 20 and 21, which support pivot pins 22 and 23. Spaced from the end members 20 and 21, by means of spacers 24 and 25, are a pair of vertical frame members 26 and 27, respectively, to which there are, in turn, secured a pair of U-shaped blocks 28 and 29, which carry short studs 30 and 31, respectively, adapted to enter apertures 32 and 33 in the mounting arms

13 and 14, respectively, to position the vertical unit 10 in the fixture, the bottom of the block 28 and 29 having slots 34 and 35, respectively, formed in them for receiving a vertically disposed portion of the frame 12. When a vertical unit 10 has been positioned in the fixture with the portions of the frame 12 in the slots 34 and 35 and with the pins 30 and 31 entered into the apertures 32 and 33, respectively, the unit may be clamped in place by clamping arms 36 and 37. The arms 36 and 37 are loosely mounted on pins 38 and 39 and may be rotated around the pins to carry locking elements 40 and 41 into engagement with the apertures 32 and 33, respectively. The left and right ends, respectively (Fig. 1), of the clamping arms 36 and 37 have levers 42 and 43 pivotally mounted in slots 44 and 45 formed therein. The inward ends of the levers 42 and 43 are formed eccentrically of the pivot mounting for the levers and when the locking elements 40 and 41 have been moved into engagement with the apertures 32 and 33, the levers 42 and 43 may be moved to the position shown to clamp the locking elements 40 and 41 tightly against the mounting arms 13 and 14, thereby to hold the vertical unit 10 rigidly in place in the fixture. The lower ends of the vertical frame members 26 and 27 are interconnected by a plate 50, to which they are secured in any suitable manner, for example, by welding, as indicated at 51 and 52, so that the vertical unit carried by the blocks 28 and 29 in clamping position thereon may be rocked about the pins 22 and 23 by an operator adjusting the contact springs of the vertical unit. The frame 12 of the vertical unit carries on it an electromagnet 53, which has a pair of terminals 54—54 extending downwardly from it, and when the unit 10 is moved to the position shown in Fig. 1, these terminals 54 will engage and depress spring pressed plunger type contacts 55—55, which are urged upwardly by coiled springs 56—56 mounted in a block of insulating material 57, suitably secured within a cut-out 58 in the plate 50. There are also mounted on the frame 12 a plurality of contacting members having terminals 60—60, which extend vertically from the frame 12, and these terminals, when the unit 10 is placed in the fixture, engage a series of spring-pressed plunger-type contacts 61—61, which are normally urged upwardly (Fig. 1) by coil springs 62—62. The contacts 61—61 and spring 62—62 are mounted in a block 63 of insulating material mounted between the plate 50 and a plate 64 secured to and spaced from the plate 50 by a pair of spacers 65 and 66. The terminal ends 16 of the contact springs mounted on the frame 12 extend downwardly between the plates 50 and 64 when the vertical unit is positioned in the fixture, as shown in Figs. 1 and 2, where they will be engaged by knife-edged contacts 70—70.

Each of the terminal ends 16 of the contact springs has a terminal 71 formed on it and the terminals 71—71 are so arranged on the terminal ends 16 of the contact springs that in each pileup of contact springs the terminals 71—71 for that pile-up are arranged in echelon formation, as most clearly shown in Figs. 4 and 5. Therefore, the knife-edged contacts which are to engage the terminals 71, are arranged in a similar formation, being formed on the ends of the springs 72—72. The springs 72—72, for each row of terminals 71, are mounted on a common block 73 of insulating material and have wires 74 connected to the lower ends of them, whereby the springs 72, when their contacts 70 are in engagement with the terminal 71, will connect the terminal 71 to suitable testing apparatus. As most clearly shown in Fig. 4, adjoining rows of contact springs have their terminals 71 faced in opposite directions to facilitate wiring of the vertical unit, and, accordingly, the blocks 73, which support the spring 72, have a compression spring 75 mounted between them normally to urge them apart to move the contacts 70 out of engagement with the terminals 71, the blocks 73 being pivoted by means of pins 76 in the plates 50 and 64. The position of the blocks 73 and their associated springs 72, when the spring 75 moves them apart, is shown in Fig. 6, and the position of the block 73 and the spring 72, when the contacts 70 are in engagement with the terminals 71, is shown in Fig. 4. Each pair of blocks 73, which are urged apart by a spring 75, have a cam 80 associated with them for rocking them about their pivot pins 76. The cams 80 are fixed to shafts 81—81, which are journalled in the plates 50 and 64 and each of which has a lever 82 secured to it. Each of the levers 82 has a pin 83 fixed to it and extending into a slot 84 in a shiftable plate 85. The plate 85 is slidably positioned in a rail 86 fixed to the plate 50 and a pair of guide blocks 87 and 88 also fixed to the plate 50. Fixed to the left end (Fig. 3) of the plate 85 is a block 89 having a plunger 90 formed integrally with it and extending over into an aperture 91 in a block 92 fixed to the plate 50. A compression spring 93 surrounds the plunger 90 and is interposed between the block 92 and the block 89 normally to urge the block 89 to the right (Fig. 3). The right end of the plate 85, as viewed in Fig. 3, has a link 94 pivotally attached to it by means of a pin 95. The link 94 has its right end (Fig. 3) pivotally mounted on a pin 96 fixed in a cam member 97. Also pivoted on the pin 96 is a link 98, the right end (Fig. 3) of which is pivoted on a pin 99 fixed in a block 100 (Fig. 2) secured to the plate 50.

The cam member 97 is U-shaped in configuration and the links 94 and 98 extend into the U-shaped portion thereof, being rounded at their ends so that they may freely pivot on the pin 96 within the cam member 97. The cam member 97 is normally urged upwardly by a contractile spring 101, which is attached to the upper end of the cam member and to a pin 102, which is fixed to the plate 50. A cam 105, fixed to the rear end of a shaft 106, is positioned in the path of the cam member 97 and is adapted to actuate the cam member 97 upon rotation of a hand wheel 108 fixed to the shaft 106. From the foregoing, it is believed to be apparent that the spring 101 normally tends to draw the cam member 97 upwardly and the spring 93 normally tends to move the plate 85 to the right. Therefore, when the cam 105 is rotated out of the position in which it is shown in Figs. 1 and 3, the abutting ends of the links 94 and 98 will be moved upwardly and the plate 85 will be pushed to the right (Fig. 3), (the left, Fig. 1), and in moving to the right, the plate 85 will shift all of the pins 83 to the right from the position in which they are shown in Fig. 3, thereby to rock the cams 80 into the position shown in Fig. 6, where the springs 75 will move the contacts 70 out of engagement with the terminal 71. When a vertical unit 10 is positioned in the fixture 11 and

clamped in place by means of the clamping arms 36 and 37, the hand wheel 108 may be rotated to move the cam 105 to the position shown. In moving to the position shown, the cam 105 will force the cam member 97 downwardly to the position shown in Figs. 1 and 3, and move the links 94 and 98 into the position shown in Figs. 1 and 3. In moving to the position shown in Figs. 1 and 3, the links 94 and 98 will force the plate 85 to the left (Fig. 3), (to the right, Fig. 1), to move the pins 83 to the position shown, where the cams 80 under control of the levers 82 will move the bottom ends of adjoining blocks 73 to the position shown in Figs. 1, 3 and 4, where the contacts 70 will engage the terminal 71 to electrically interconnect the terminals of the vertical unit with suitable testing equipment during the adjustment thereof.

Although a specific embodiment of the invention has been described hereinbefore, it will be understood that modifications and adaptations of the structure described herein may be made without departing from the scope of the appended claims.

What is claimed is:

1. A contacting fixture for connecting a series of terminals arranged in a plurality of double rows on an article to testing apparatus including a frame for rigidly supporting an article with the terminals of the article in predetermined positions, a plurality of contact supporting blocks pivoted on said frame and arranged in pairs, the blocks in each pair being positioned on opposite sides of each double row of terminals, a series of resilient contacts mounted on each block, a cam member associated with each pair of blocks for moving the blocks to carry the contacts into and out of engagement with the terminals, and a common actuator for all of said cam members to cause simultaneous movement of all the blocks.

2. A contacting fixture for connecting terminals arranged in a series of double rows on an article to testing apparatus including a frame for rigidly supporting an article with the terminals of the article positioned in predetermined locations, contact supporting blocks pivoted on said frame, one block being positioned adjacent to the terminals in each double row, a series of resilient contacting members mounted on each block, a cam member interconnecting each block with a block on the opposite side of the double terminal row for moving the blocks to carry the contacts into and out of engagement with the terminals, a common actuator for all of said cam members, said common actuator comprising a shiftable plate for cooperation with said cams to actuate the cams on movement of the plate, and means for moving the plate to cause simultaneous movement of all the blocks.

3. A contacting fixture for connecting the terminals arranged in series of double rows on an article to testing apparatus comprising a frame for rigidly supporting the article, a series of rows of contacts corresponding to each row of terminals, a support for each row of contacts pivoted on said frame, said supports being arranged in pairs with the two supports in each pair on opposite sides of the double terminal row, a cam individual to and interconnecting each pair of supports for actuating the supports, cam arms extending from said cams and carrying pins, a slotted plate for receiving the cam arm supported pins in its slots, and means for shifting the slotted plate to simultaneously actuate all of the cams for moving the contacts into and out of engagement with their associated terminals.

4. In a contacting device for connecting terminals arranged in a plurality of double rows on a piece of electrical apparatus to a testing apparatus comprising a frame for supporting the electrical apparatus, a plurality of contact supports pivoted on said frame and arranged in pairs with the two supports in each pair on opposite sides of a double row of terminals, a series of contacts on each support arranged in the same order as the corresponding terminals of the apparatus, means engaging said contact supports in each pair to normally urge the contacts carried by them apart, a cam for each pair of contact supports to move the contact supports in a direction to carry the contacts into engagement with the terminals of the appartus, means for simultaneously actuating all of said cams including cam levers individual to said cams, a plate common to all of said cam levers, a linkage mechanism connected to said plate, a cam for actuating said linkage mechanism, and a manually operable member for actuating said last mentioned cam.

5. In a device for interconnecting a testing mechanism with terminals extending from an apparatus in a plurality of double rows, a frame, a fixture pivoted on said frame for supporting the apparatus, a plate carried by said fixture and spaced therefrom to form a recess for receiving the terminals, a series of contact supporting blocks pivotally mounted between the plate and fixture and arranged in pairs with the blocks in each pair on opposite sides of each double terminal row, a row of contacts resiliently mounted on each of said blocks in the same arrangement as the terminals in one row, a spring between each pair of blocks for normally urging the blocks of each pair apart, a rotatable cam positioned between each pair of blocks, a lever arm on each cam, a pin on each lever arm, a shiftable plate having a separate slot therein for receiving each lever arm pin, and means for shifting the slotted plate to rotate the blocks and cause all of the contacts to engage and disengage their respective terminals at one time.

ARVID N. HANSON.
STANLEY F. WARNER.