US 20020173769A1

(19) United States

(12) Patent Application Publication (10) Pub. No.: US 2002/0173769 A1

Gray et al. (43) Pub. Date: Nov. 21, 2002

(54) INFUSION SET FOR A FLUID PUMP

(76) Inventors: **Larry B. Gray**, Merrimack, NH (US); **Jared Hamilton**, Manchester, NH (US); **Richard Lanigan**, Concord, NH (US); **Brian Tracey**, Litchfield, NH (US)

Correspondence Address:
BROMBERG & SUNSTEIN LLP
125 SUMMER STREET
BOSTON, MA 02110-1618 (US)

(21) Appl. No.: **10/151,733**

(22) Filed: **May 20, 2002**

Related U.S. Application Data

(63) Continuation-in-part of application No. 10/037,614, filed on Jan. 4, 2002.

(60) Provisional application No. 60/291,881, filed on May 18, 2001.

Publication Classification

(51) **Int. Cl.**[7] **A61M 31/00**

(52) **U.S. Cl.** **604/506**; 604/890.1

(57) **ABSTRACT**

A medical device for delivery of a fluid to a patient from a line terminating in a tubing needle. The medical device includes a cannula assembly for coupling the fluid into a cannula that is inserted into the patient. The cannula assembly has a first locking element disposed in a fixed position with respect to the cannula. Coupling the line to the cannula assembly is an infusion flap. The infusion flap includes a second locking element for engaging the first locking element of the cannula assembly and a lift tab for disconnecting the infusion flap from the cannula assembly. Coupling of the first and second locking elements requires initial mating of the infusion flap and cannula assembly followed by locking through rotation of the infusion flap with respect to the cannula assembly.

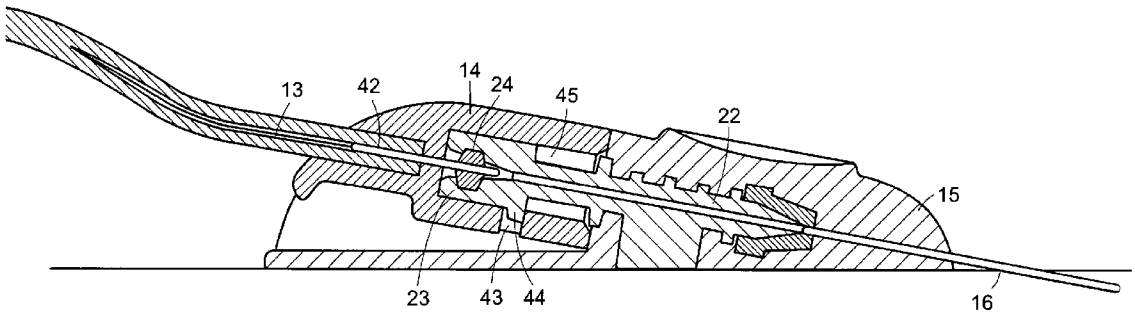

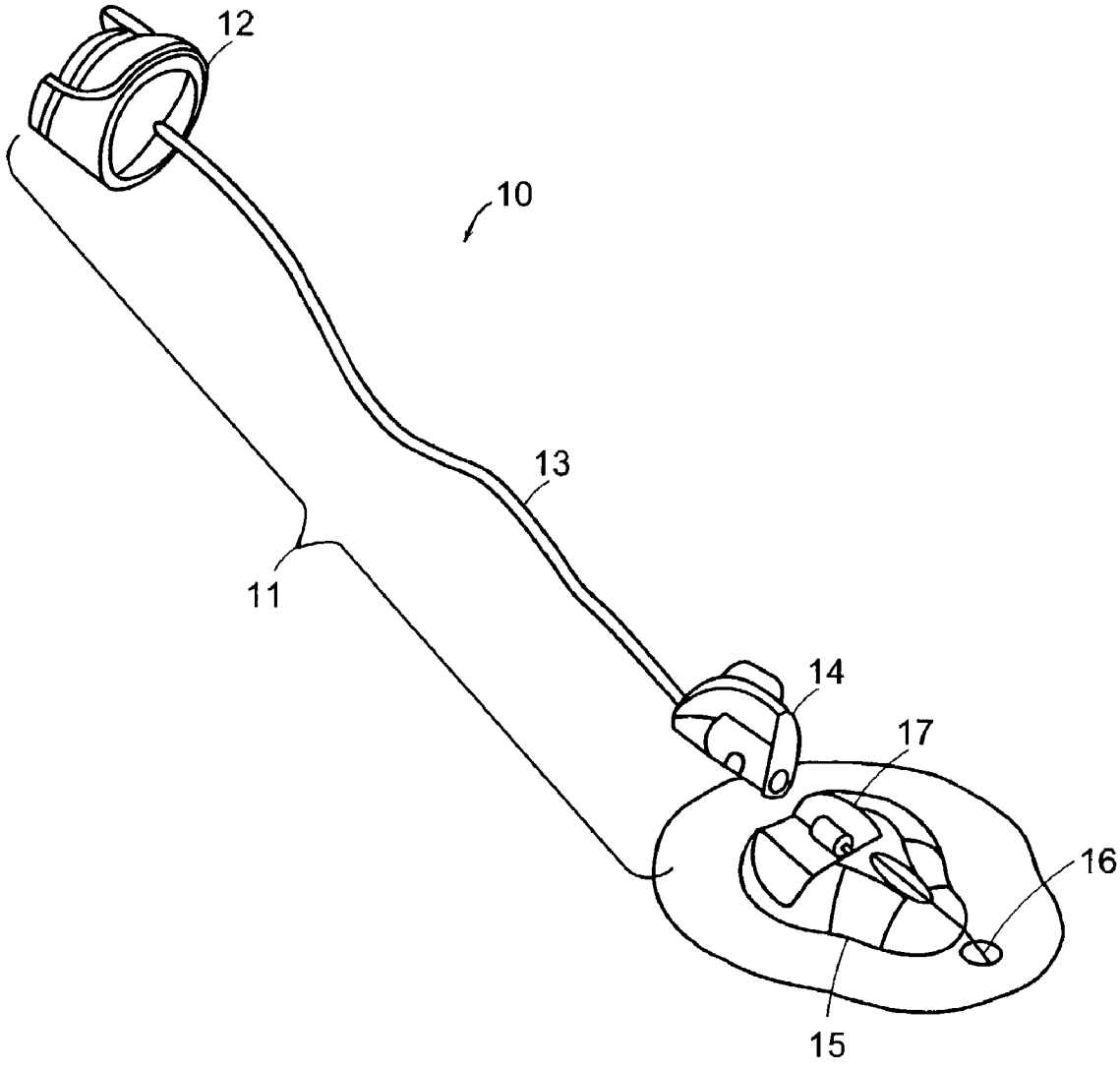

FIG. 1

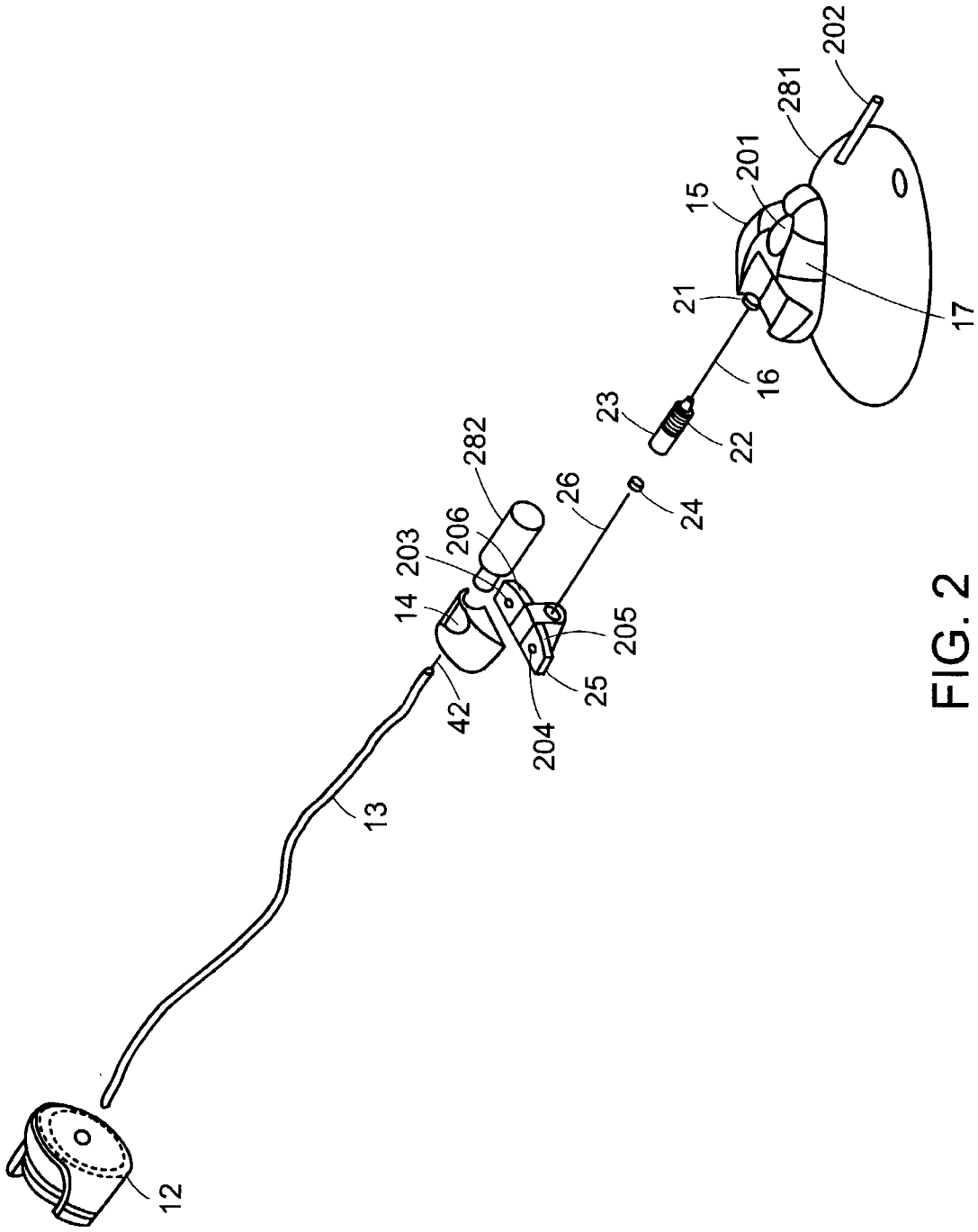
202
281
201
15
21
17
16
23
22
282
26
24
206
203
14
205
25
42
204
13
12

FIG. 2

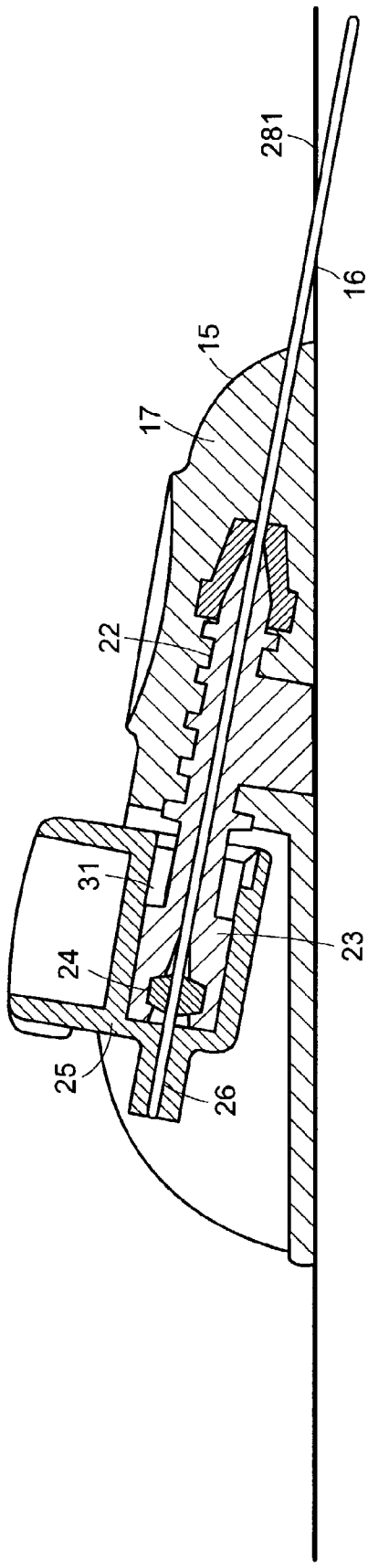

FIG. 3

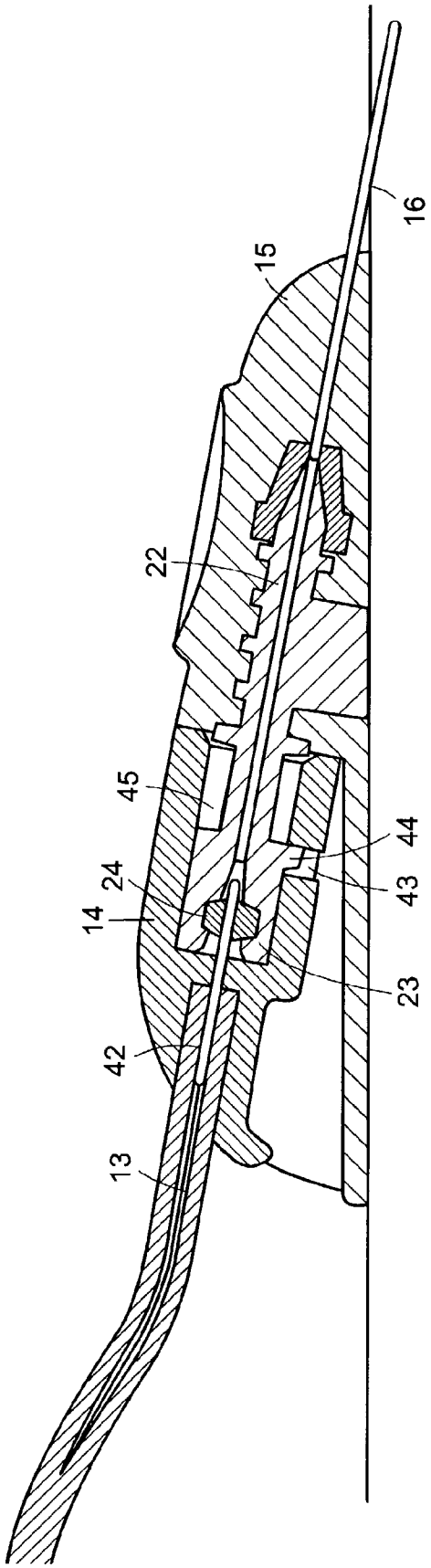

FIG. 4

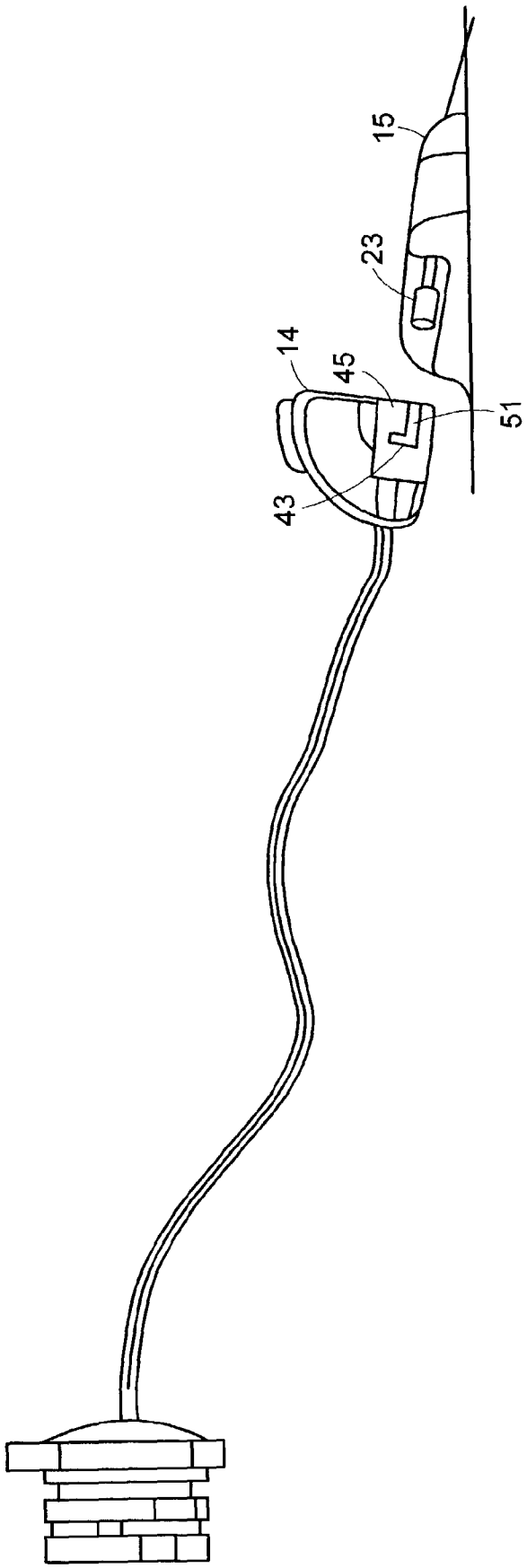

FIG. 5

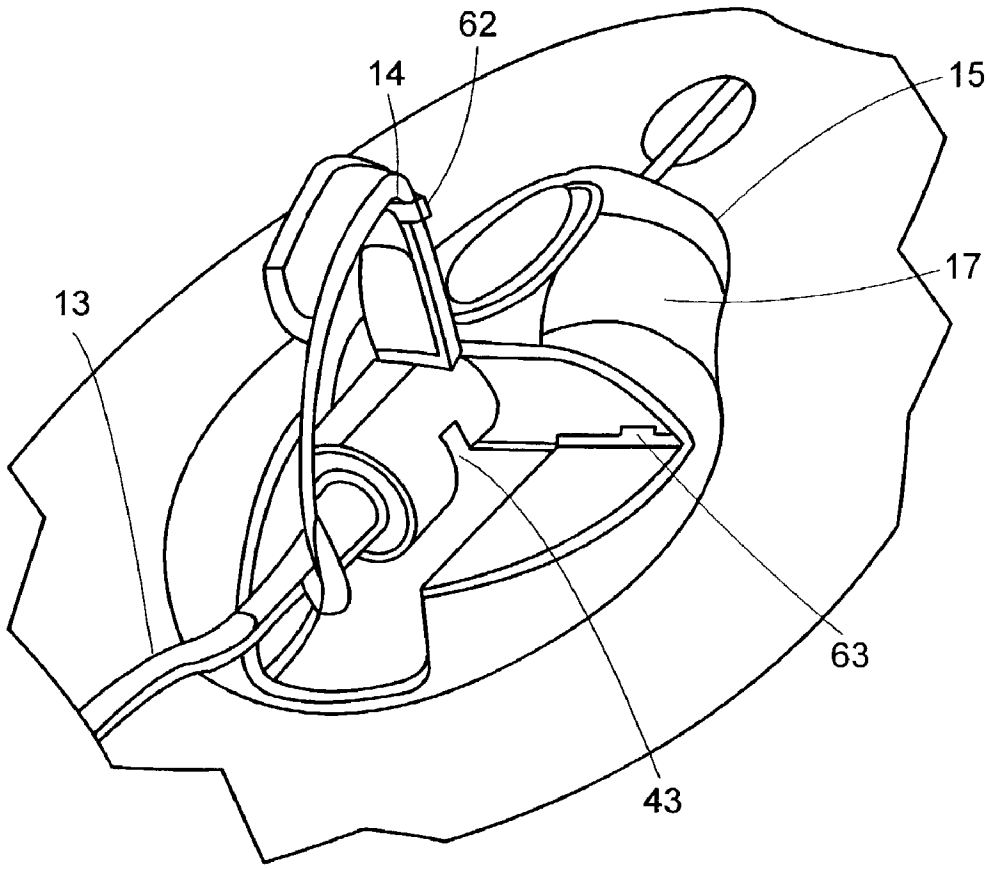

FIG. 6

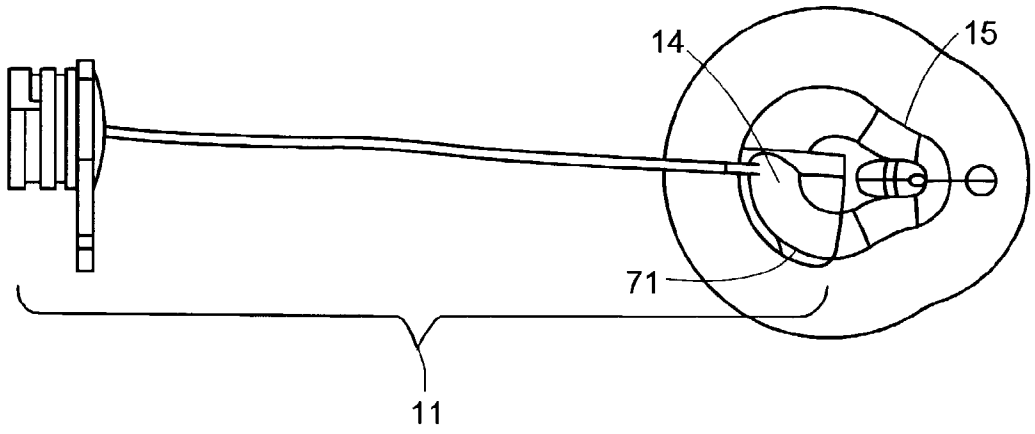

FIG. 7

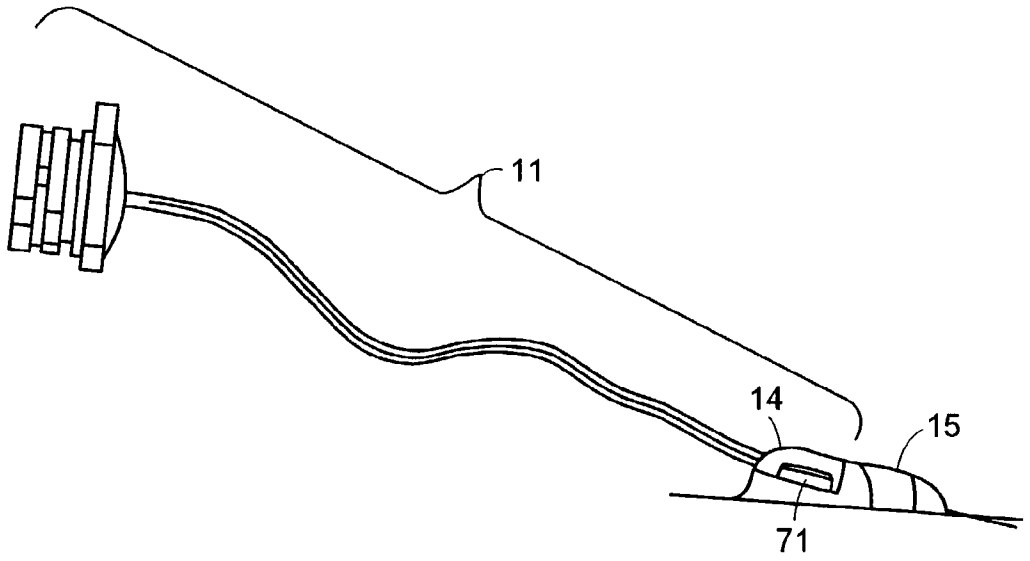

FIG. 8

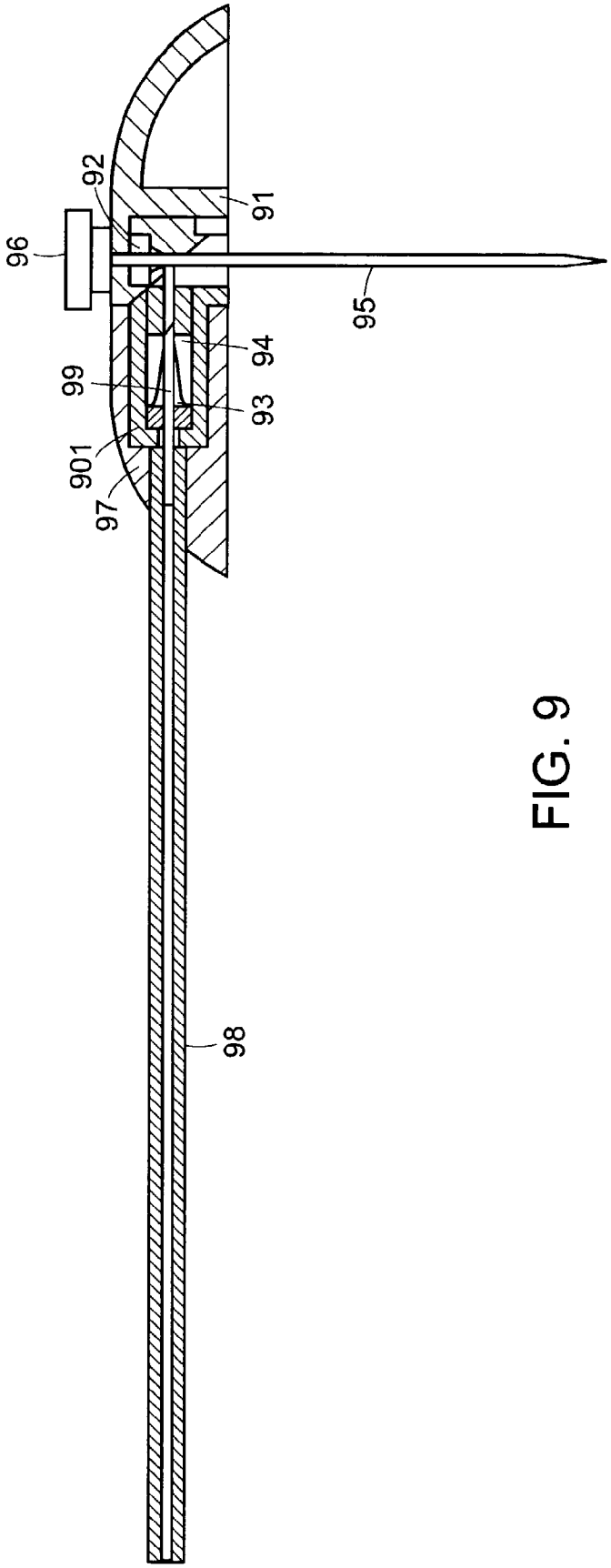

FIG. 9

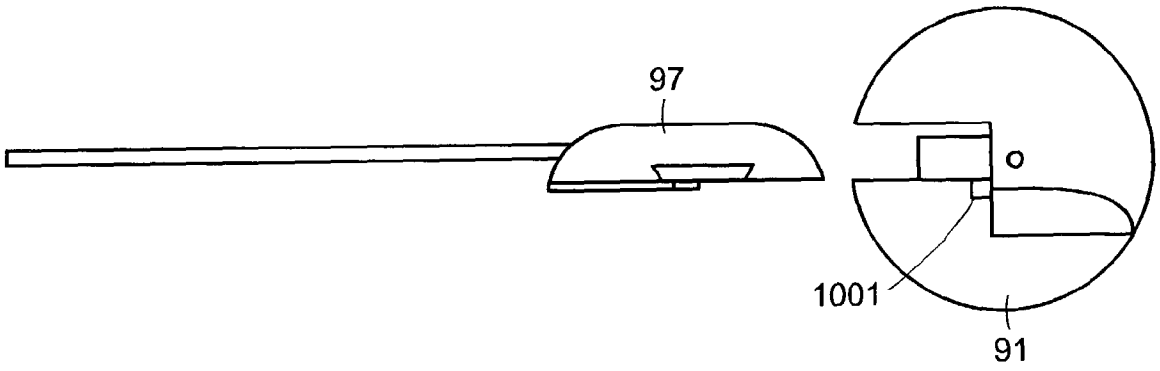

FIG. 10

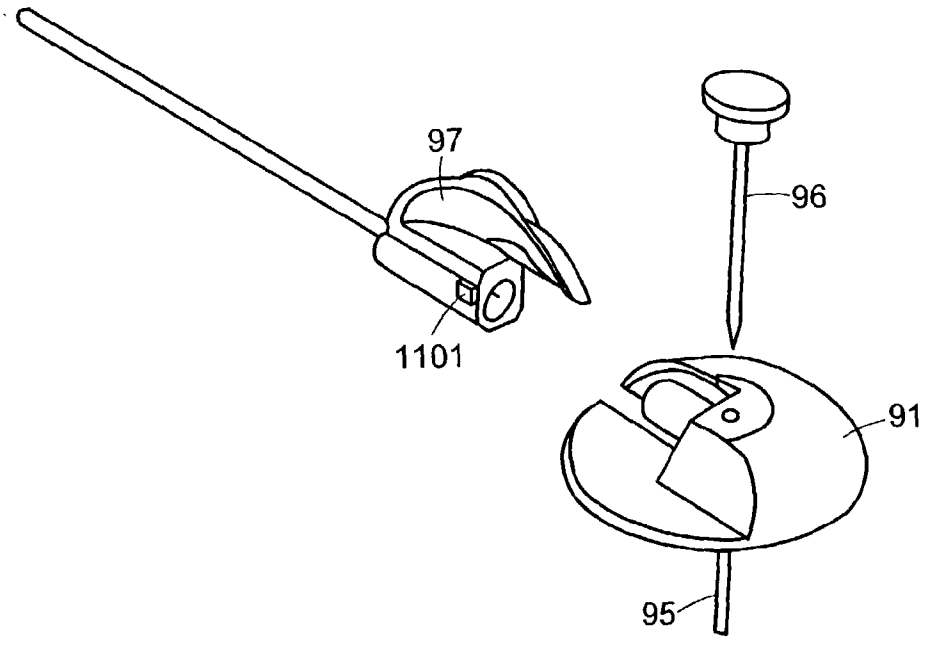

FIG. 11

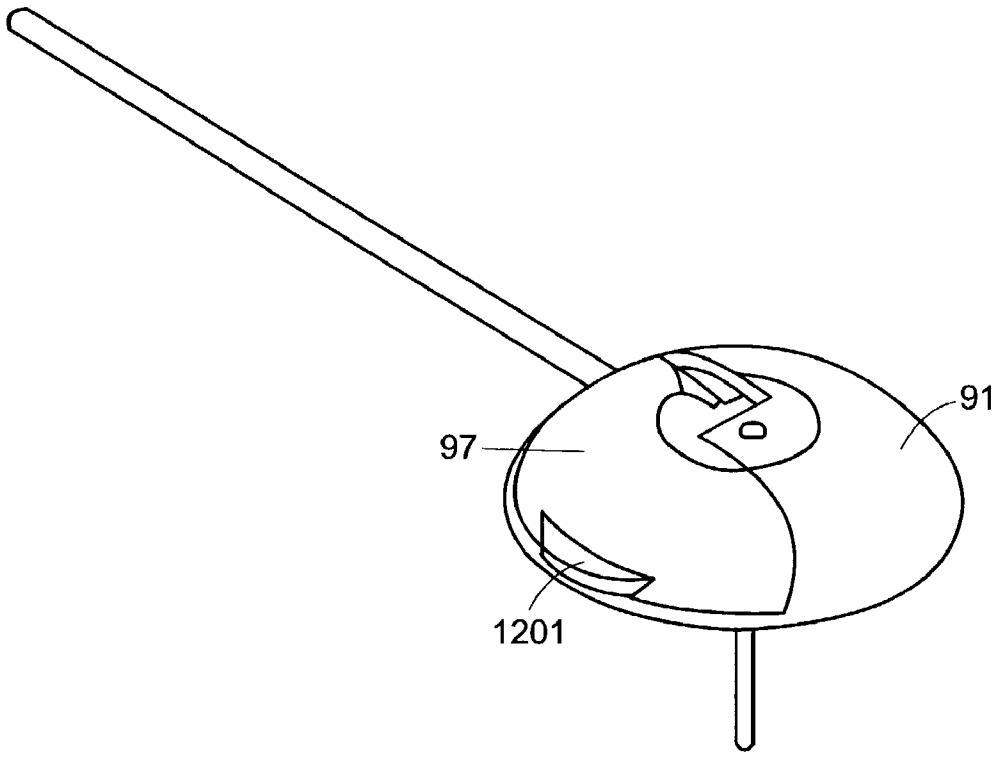

FIG. 12

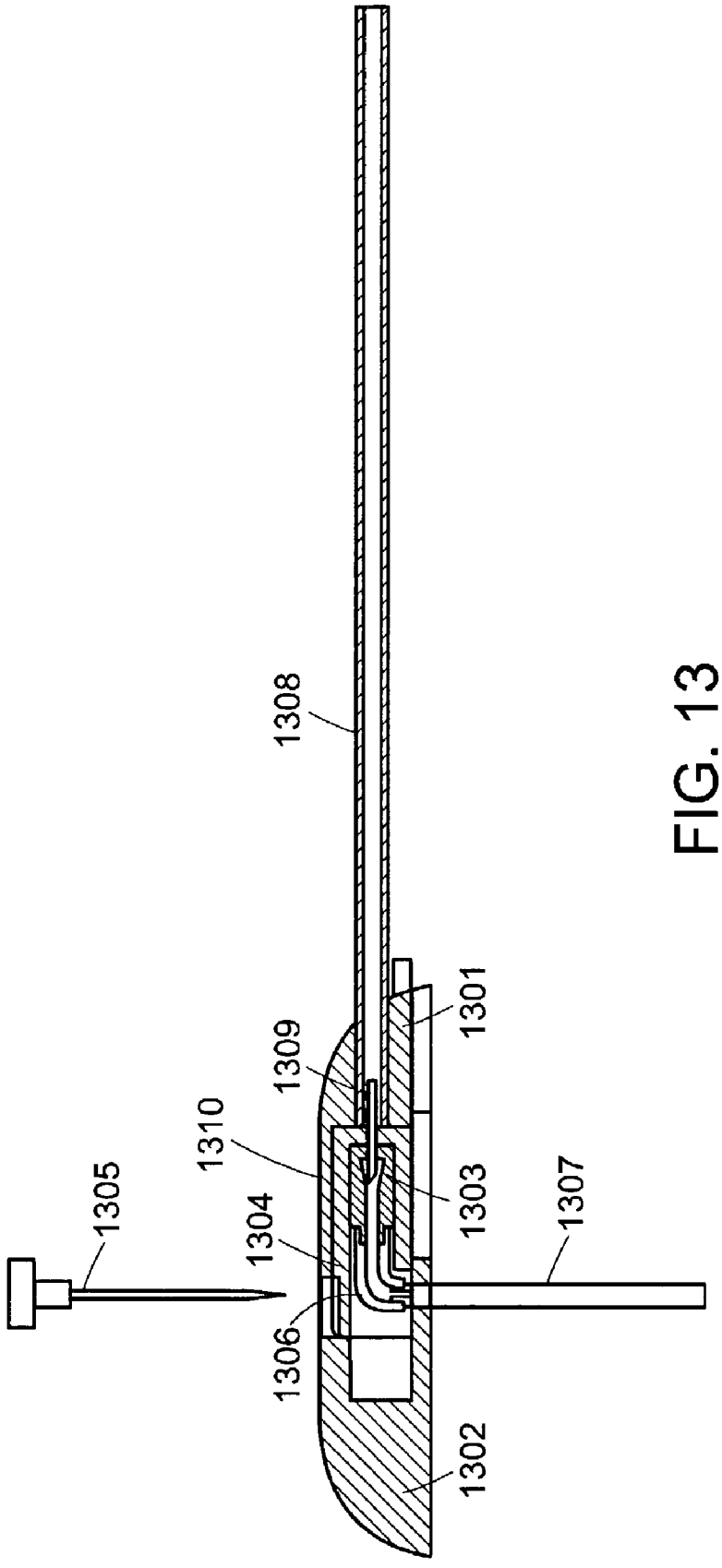

FIG. 13

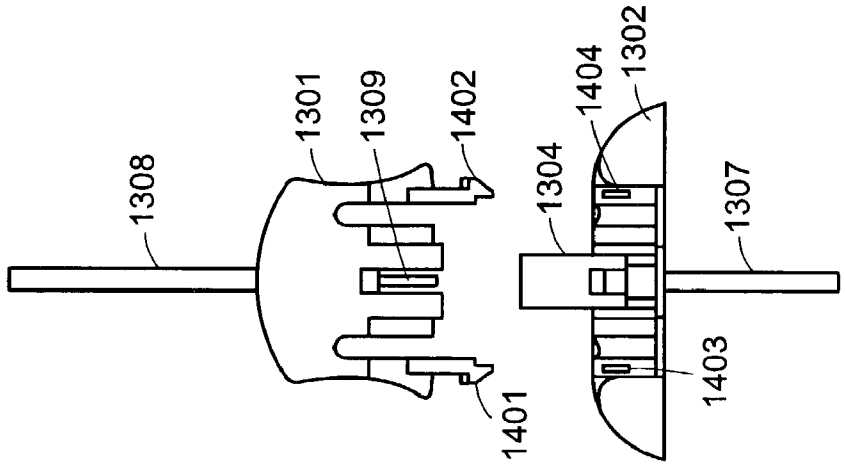
1308
1301
1309
1402
1401
1304
1404
1302
1307
1403

FIG. 15

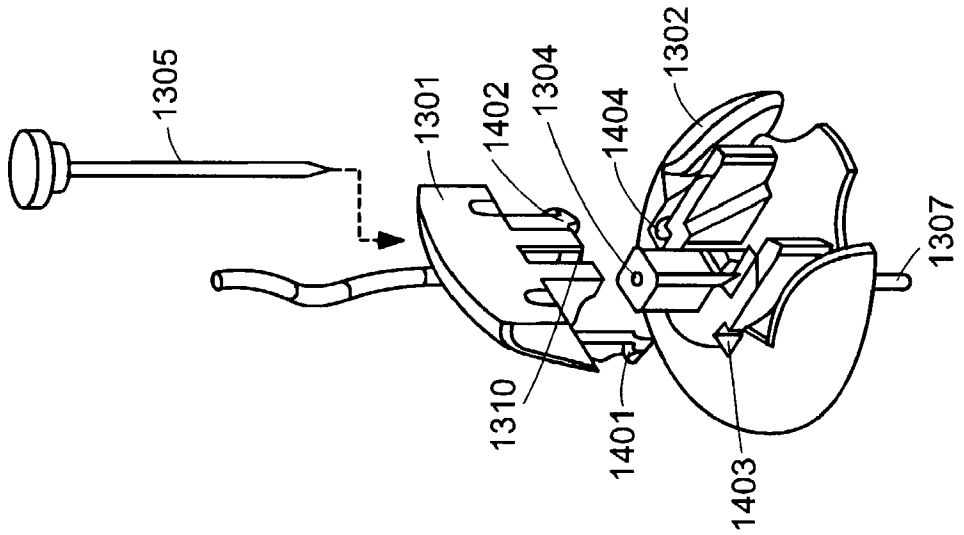
1305
1301
1402
1304
1404
1302
1307
1310
1401
1403

FIG. 14

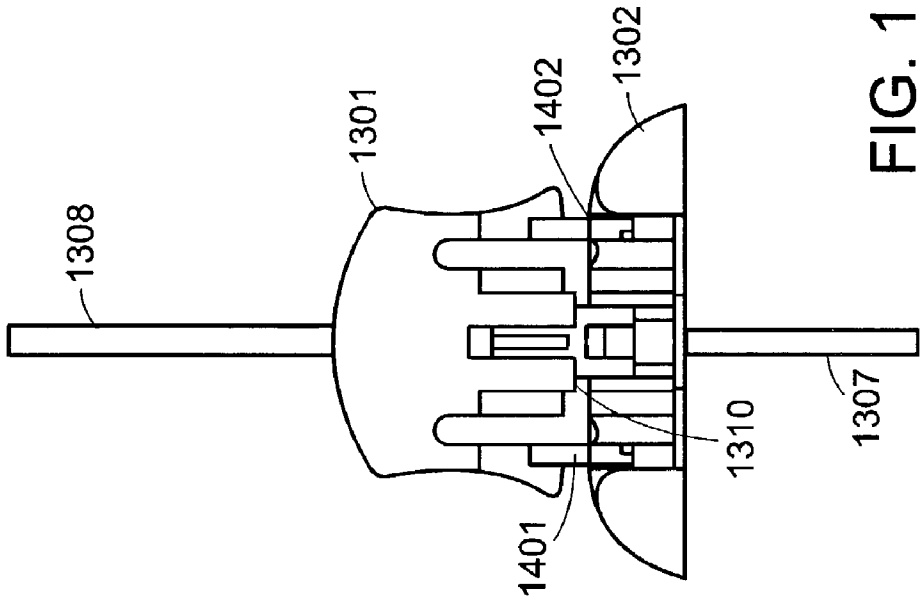

FIG. 17

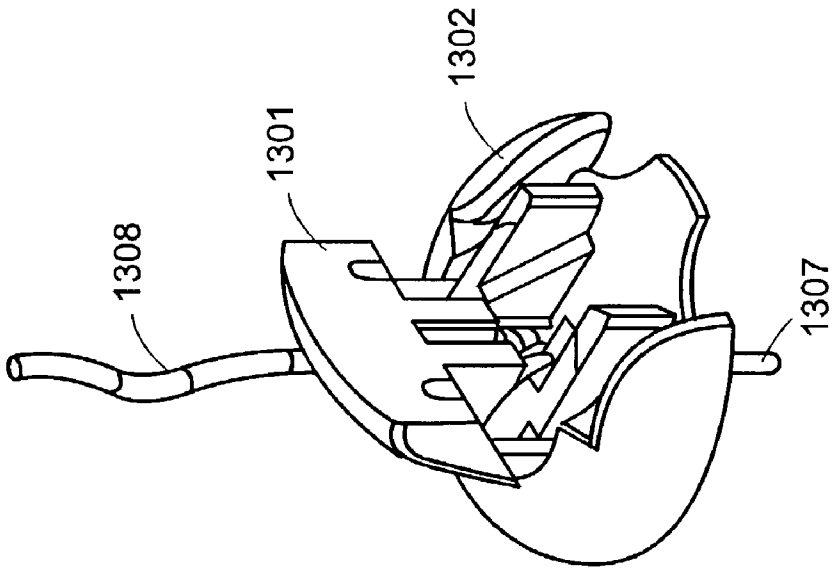

FIG. 16

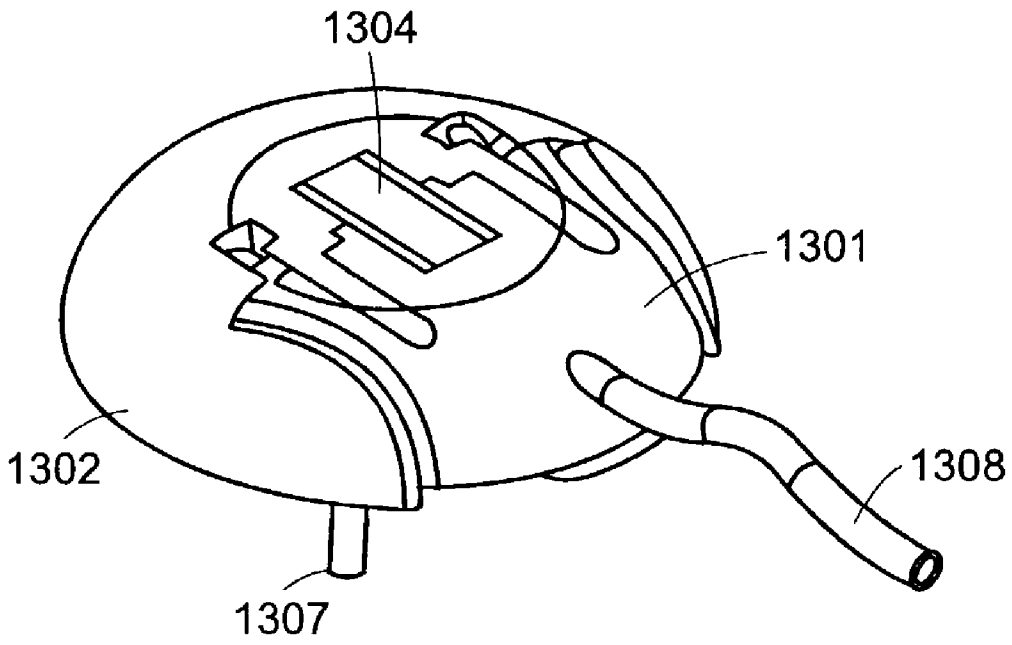

FIG. 18

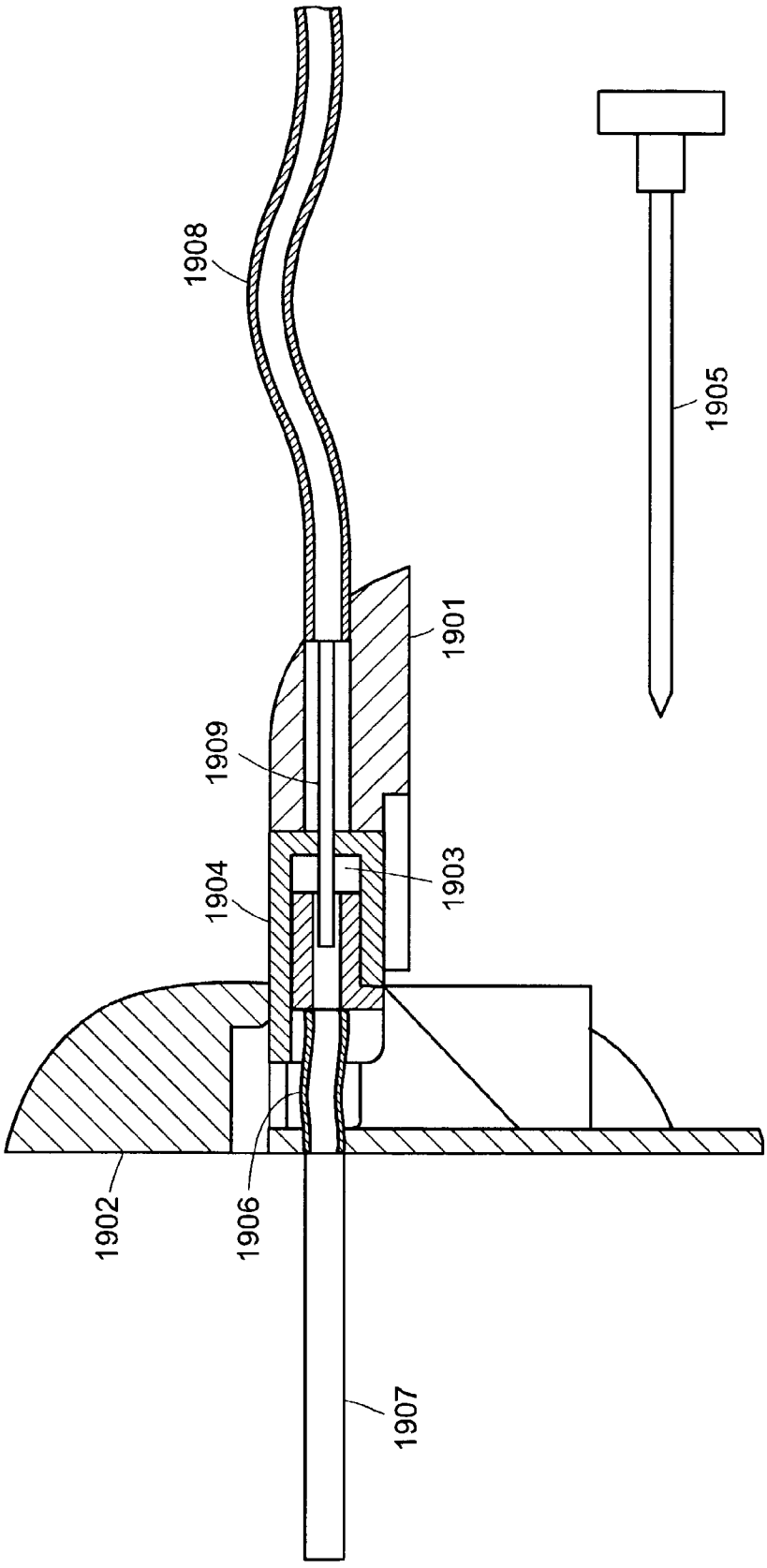

FIG. 19

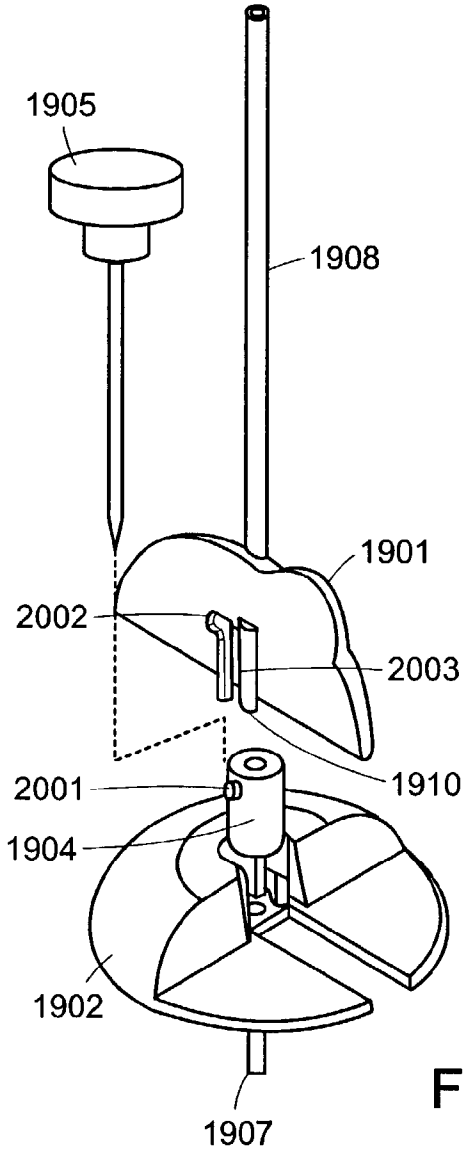

FIG. 20

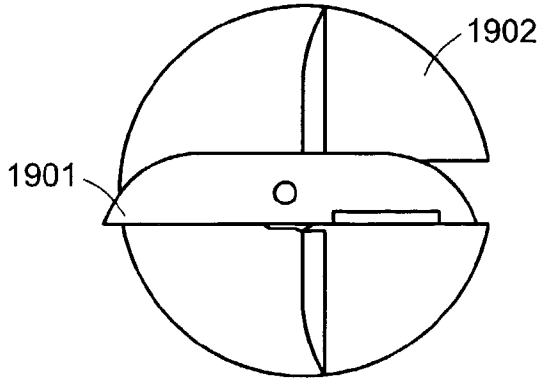

FIG. 21

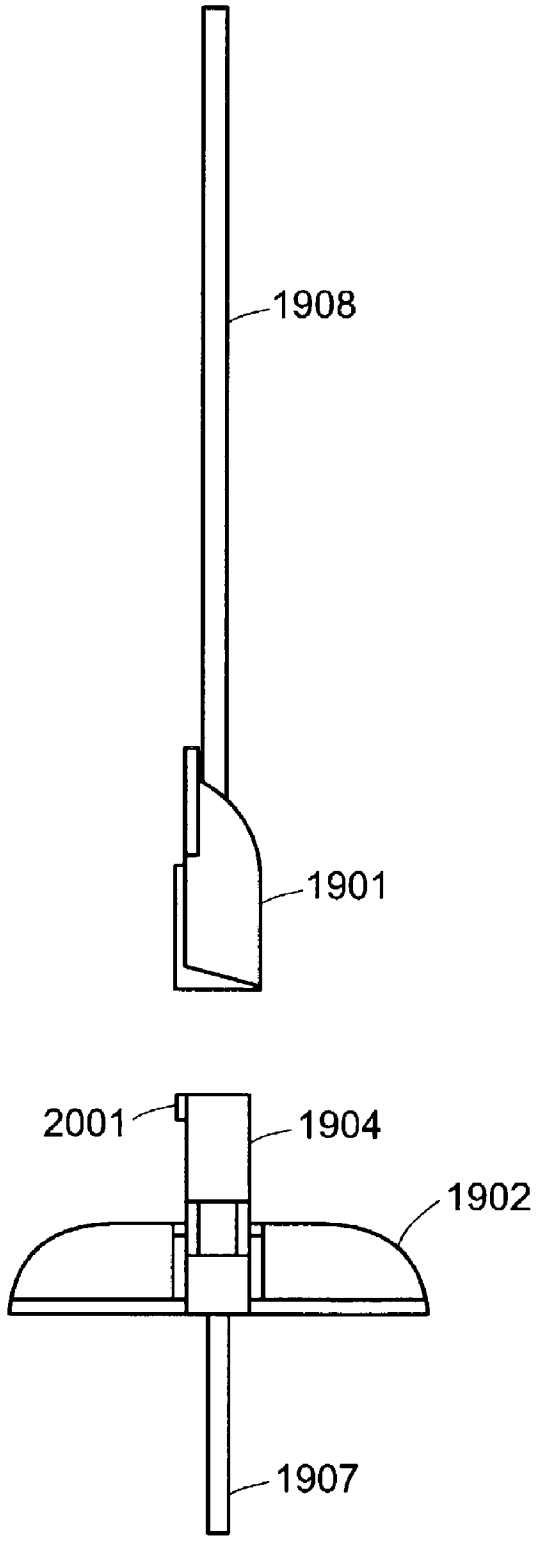

FIG. 22

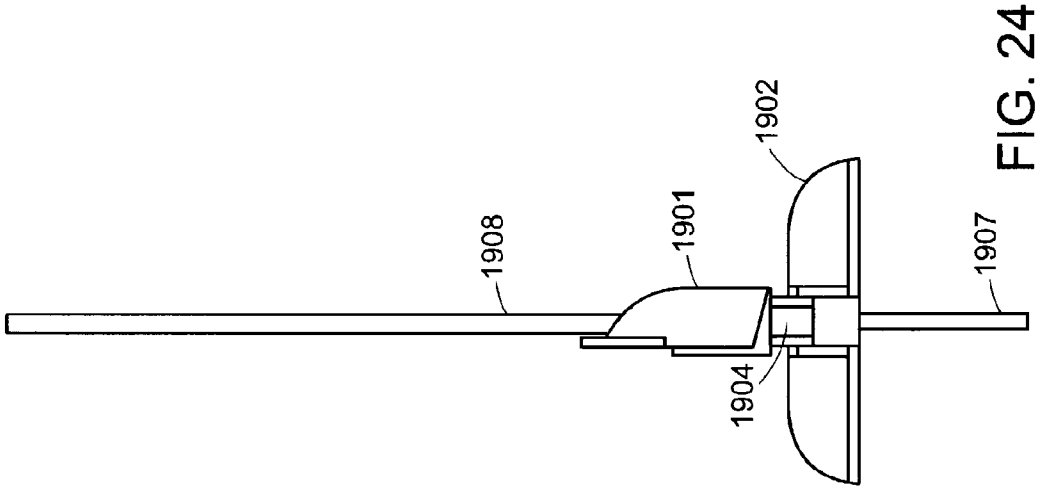

FIG. 24

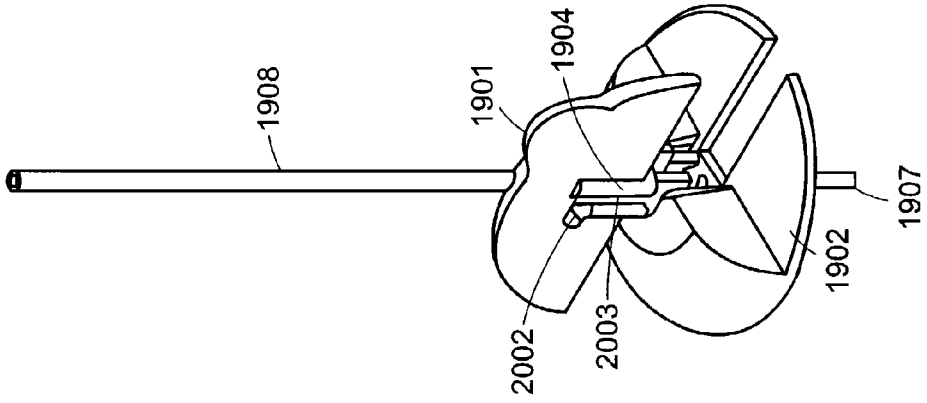

FIG. 23

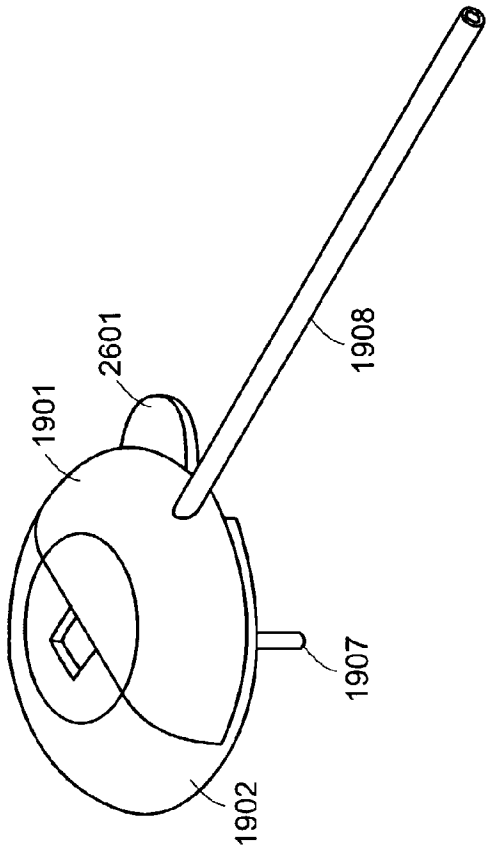

FIG. 26

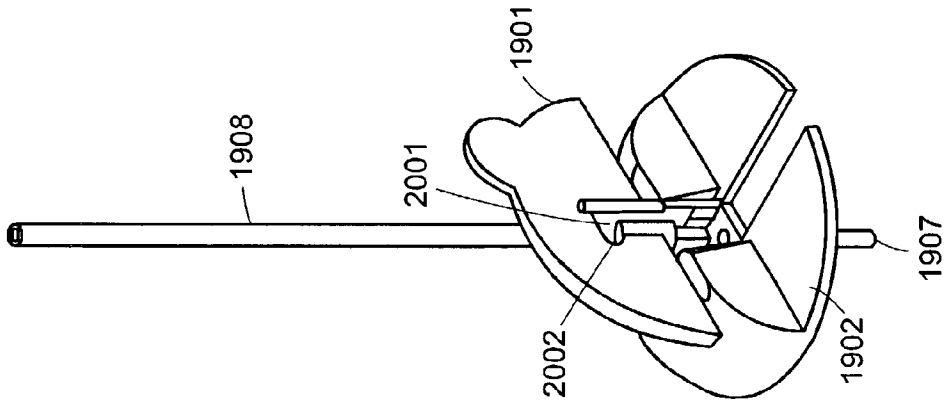

FIG. 25

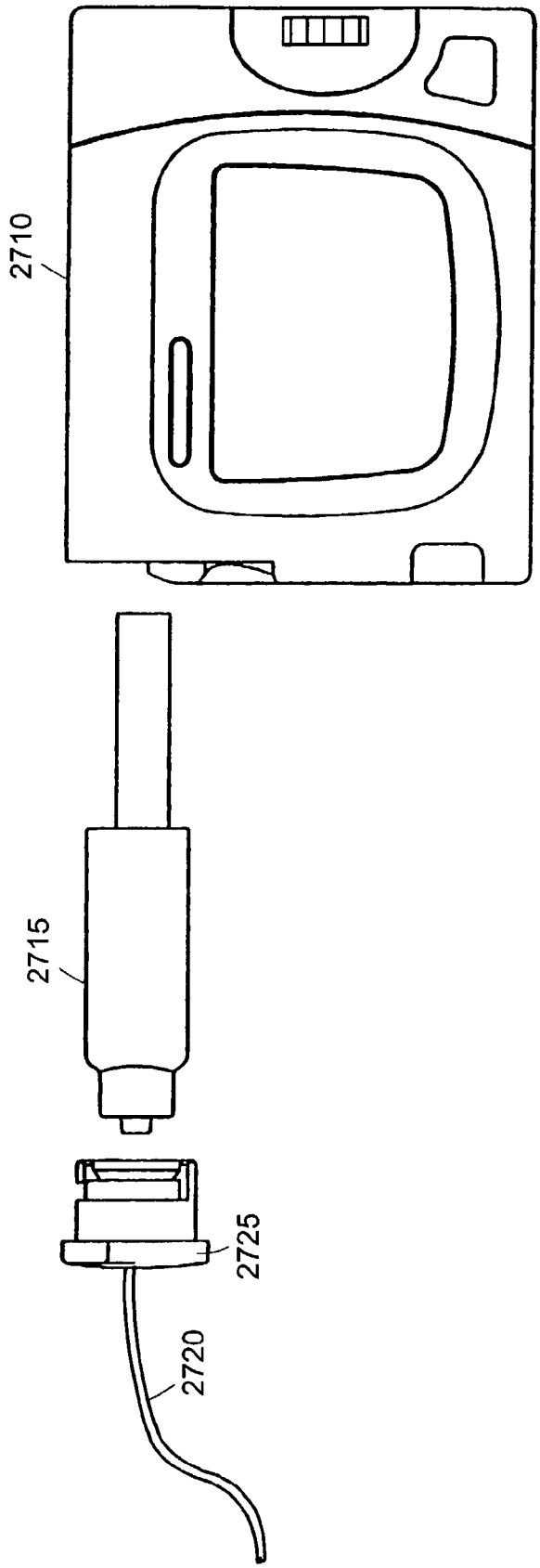

FIG. 27

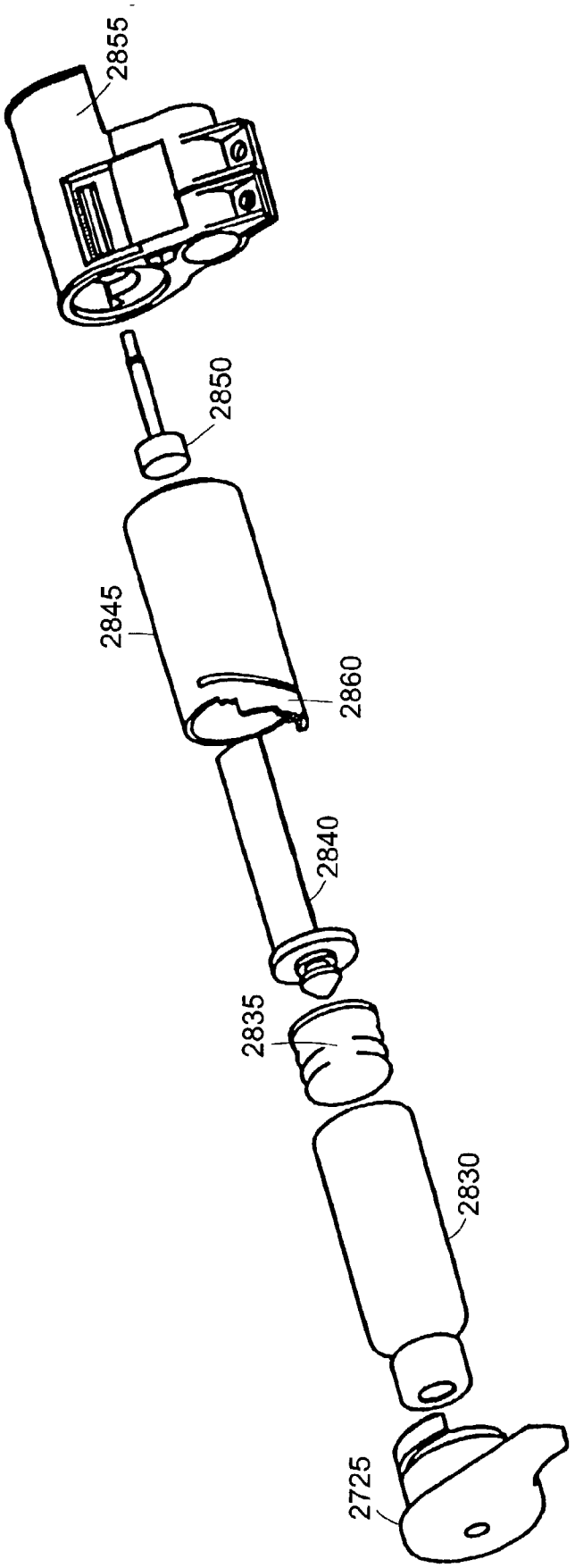

FIG. 28

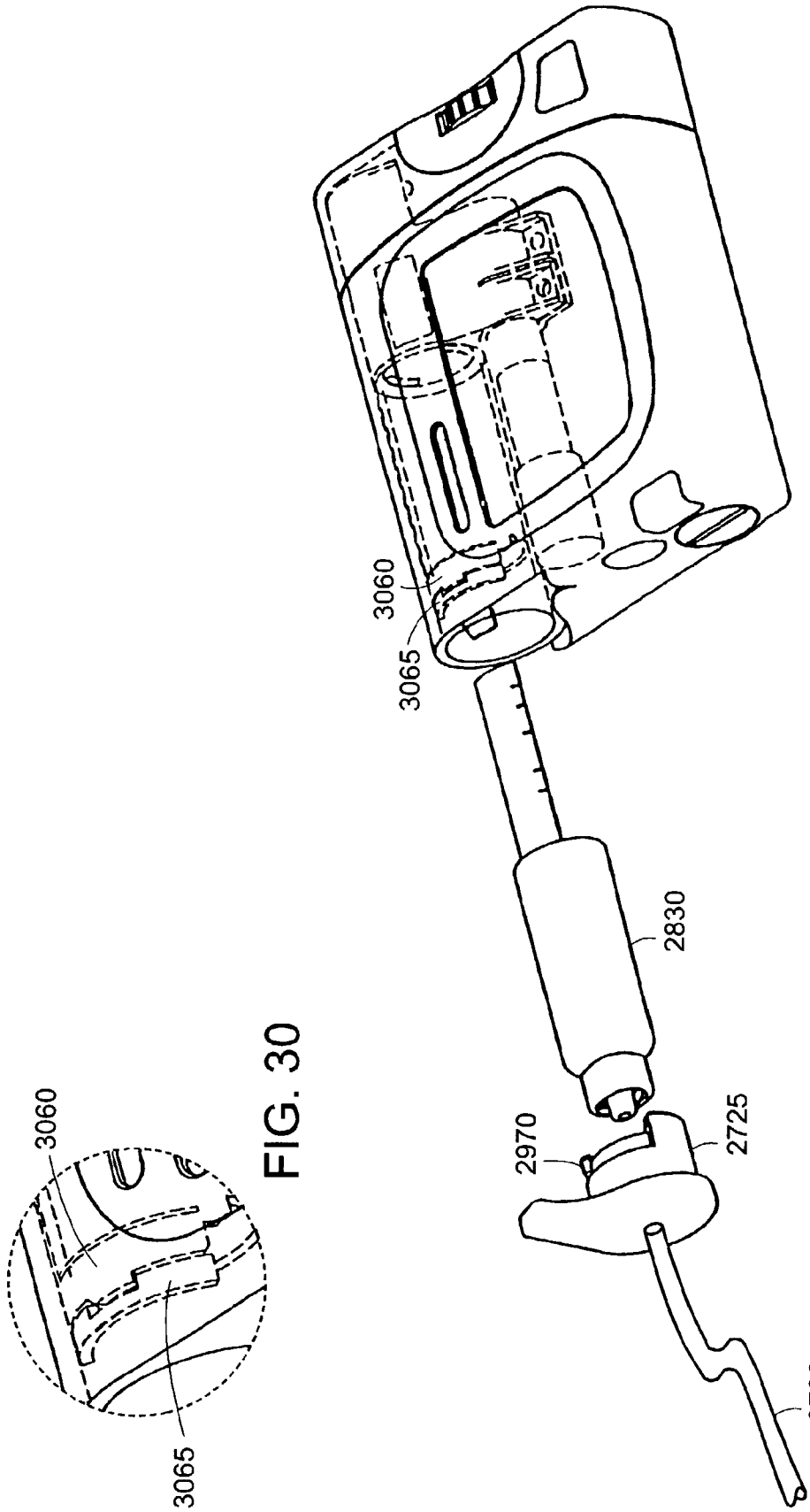

FIG. 29

FIG. 30

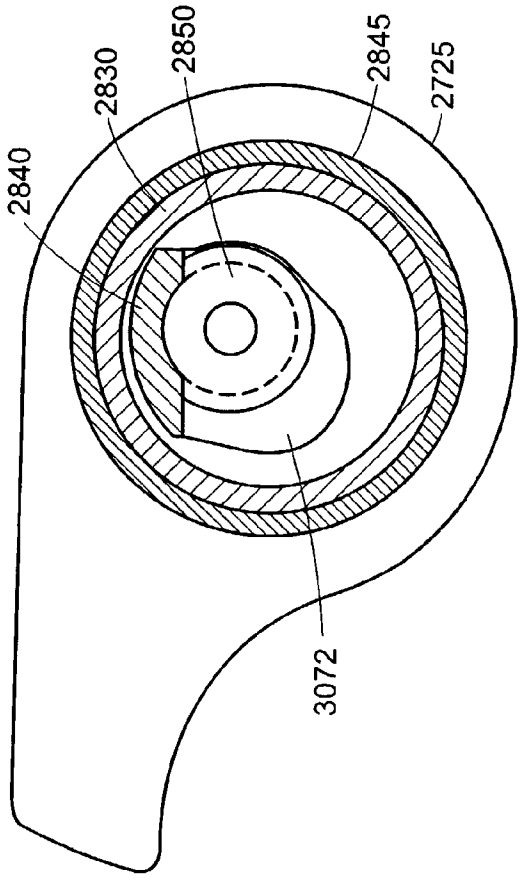

FIG. 32

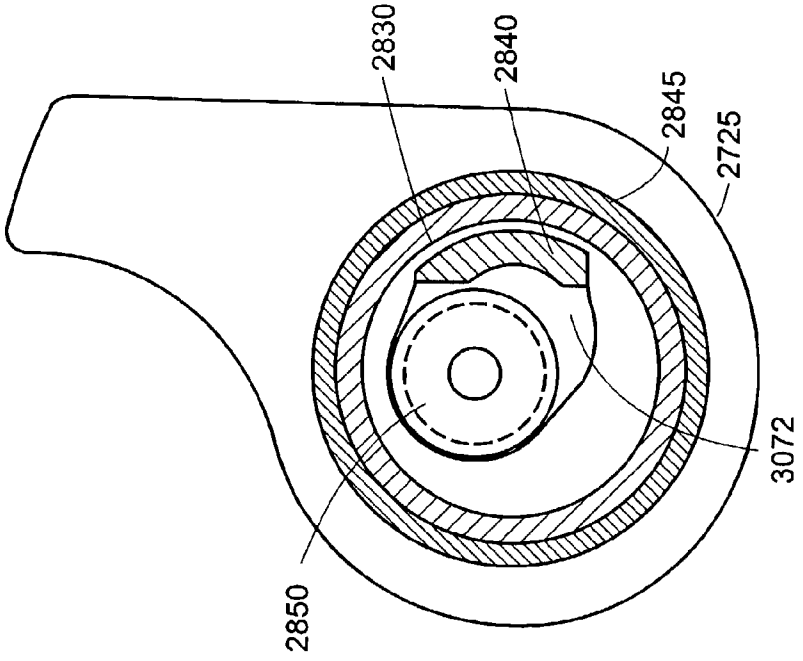

FIG. 31

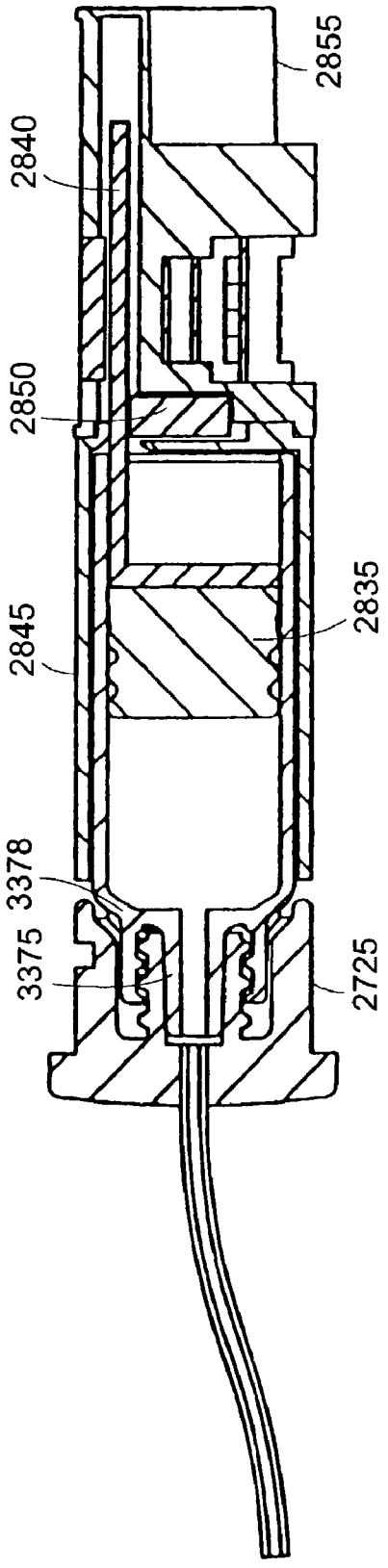

FIG. 33

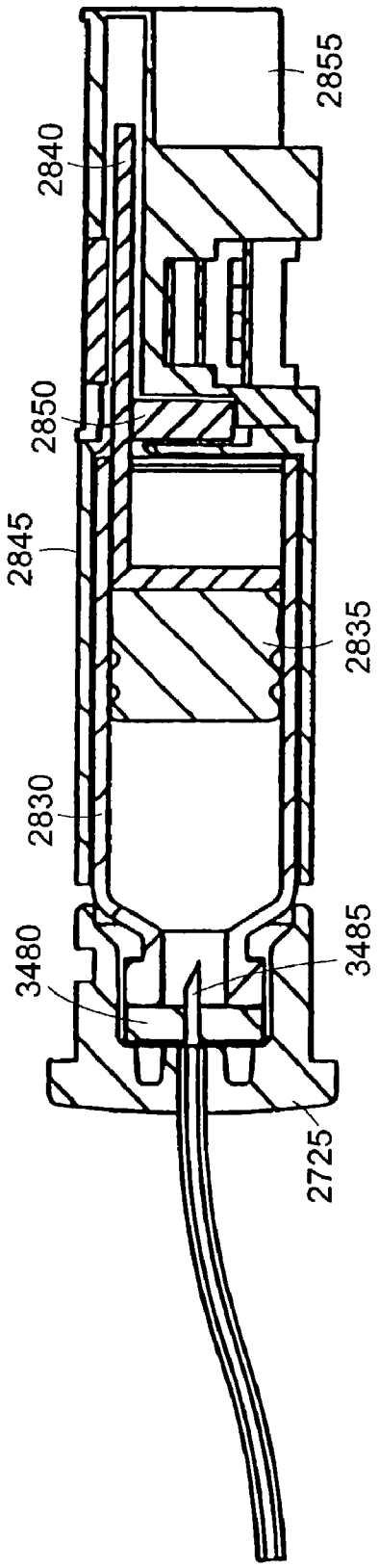

FIG. 34

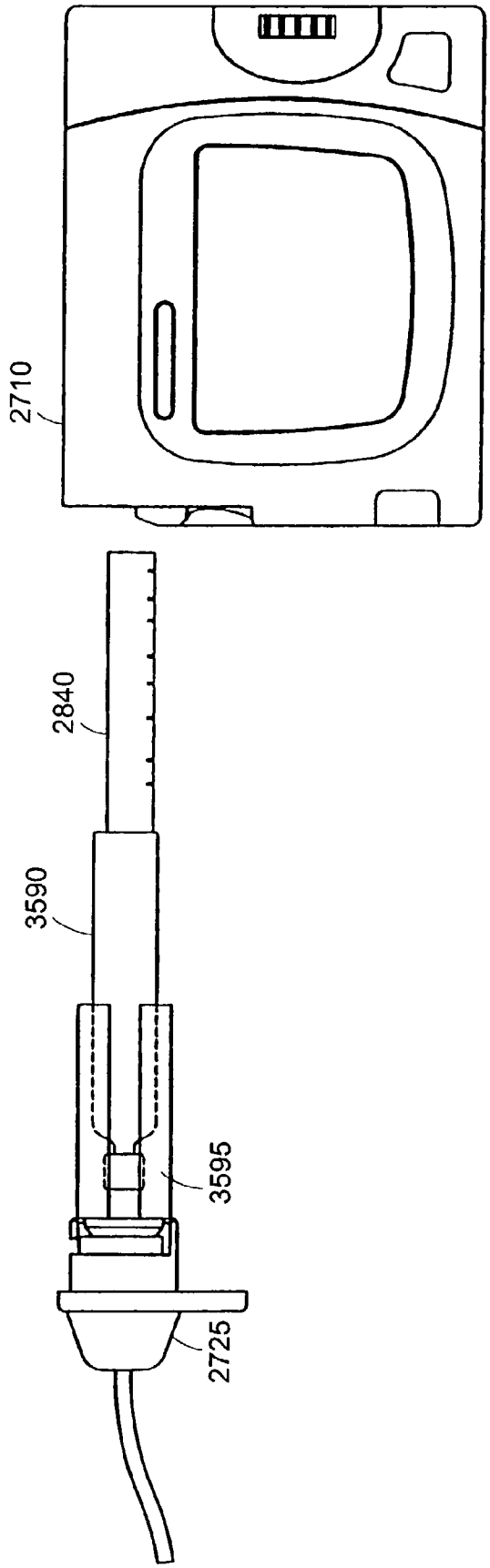

FIG. 35

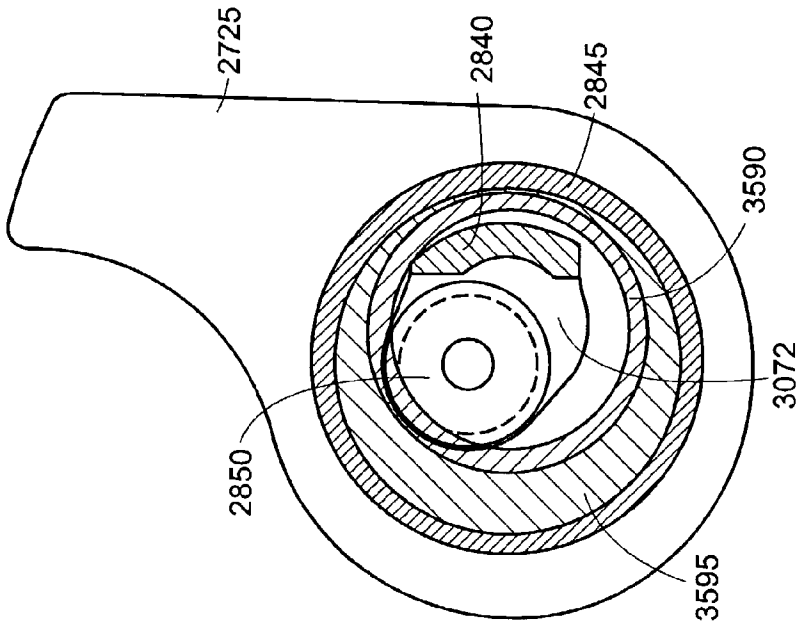
2725
2840
2845
3590
3072
2850
3595

FIG. 37

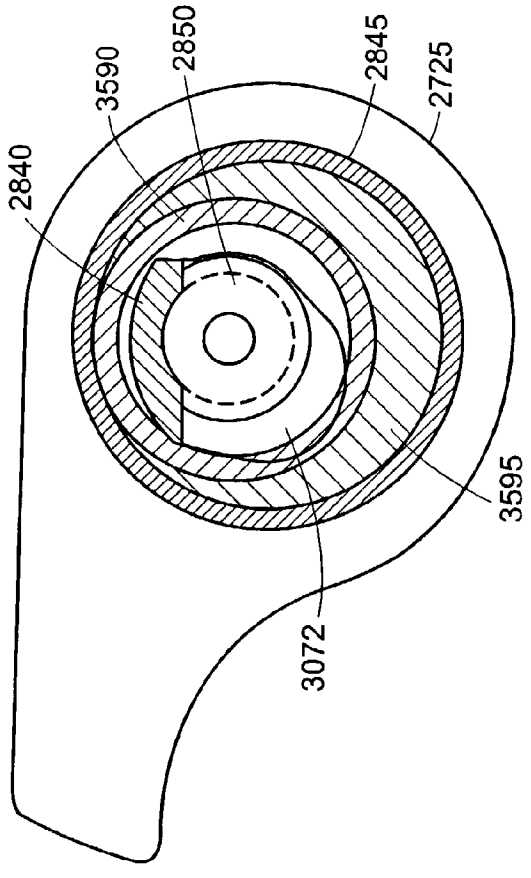
2840
3590
2850
2845
2725
3595
3072

FIG. 36

INFUSION SET FOR A FLUID PUMP

CROSS REFERENCE TO RELATED APPLICATIONS

[0001] This application claims priority from U.S. provisional patent application serial No. 60/291,881, filed May 18, 2001, entitled "Cannula Designs for Insulin Pump Systems." This application is a continuation-in-part of U.S. patent application Ser. No. 10/037,614, filed Jan. 4, 2002, entitled "Loading Mechanism for Infusion Pump." Each of these patent applications described in this paragraph is hereby incorporated by reference, in its entirety.

TECHNICAL FIELD AND BACKGROUND ART

[0002] The present invention relates to a system and method for delivery of a fluid to a patient, and more particularly, to an infusion set for a fluid pump that may be used, for example, to deliver insulin to a patient.

[0003] Currently, there are two primary methods of treating diabetes. One method involves taking multiple injections of long acting insulin on a daily basis. The second method is by continuous delivery of short acting insulin to more closely emulate the human pancreas. This may be accomplished using a syringe pump.

[0004] A syringe pump typically includes four major components. These components are a microprocessor controlled syringe pump, an insulin filled syringe, a hub and tubing set, and a cannula.

[0005] A syringe pump is often worn in a carrying case on a patient's belt, in a manner similar to a pager, or in more discrete locations such as a pocket or a brassiere. The syringe is mounted in the syringe pump and may hold enough insulin for three days. The hub serves as an interface between the syringe and a tubing set. At the end of a tubing set is a cannula typically made of either steel or Teflon. The cannula may advantageously be carried in a cannula assembly. The cannula assembly typically attaches to the patient by adhesive and is placed near the abdomen around and to the side of the navel. The cannula is inserted in fatty tissue and the insulin is injected subcutaneously.

[0006] A patient may perform activities that do not permit or are hindered by the presence of a pump, for example, when a patient wishes to take a shower or participate in certain athletic activities. Removing each of the components, including the cannula, would require a needle stick upon reconnecting the system to a patient. Since a needle stick is undesirable every time one wishes to take a shower or participate in sports, state of the art tubing sets disconnect at or near the cannula assembly, with the tubing capped to prevent contamination. Disconnecting and reconnecting the tubing set is sometimes difficult.

[0007] Cannulas with steel subcutaneous needles have been used with syringe pumps for decades. Steel needles, however, can cause irritation and discomfort. Soft cannulas, which may be made of Teflon, for example, help prevent this discomfort and are generally known in the art. The soft cannula requires the use of a steel insertion needle to penetrate skin and/or other tissue. When inserting the needle, the needle penetrates a first self-sealing septum in the cannula housing. The needle is then pushed through the soft cannula until it extends through the cannula's outer tip. After insertion of the needle into the skin, the steel needle is removed and the first septum seals the opening where the insertion needle entered. The tubing set may then be connected to the cannula by inserting a tubing needle at the end of the tubing set into a second septum in the cannula housing.

[0008] After removing the insertion needle, the first septum may be susceptible to leakage. This leakage may become more prevalent under pressure, such as when the cannula has an occlusion. Normally during an occlusion, the pressure will reach a threshold and trigger an alarm on the pump. However, if the first septum leaks, the pressure may never reach the threshold, and the pump may continue to deliver insulin. As a result, the insulin will continue to leak out of the first septum, the alarm will never trigger, and the user unknowingly does not receive the drug for an indefinite period of time.

SUMMARY OF THE INVENTION

[0009] In a first embodiment of the invention there is provided a medical device for delivery of a fluid to a patient from a line terminating in a tubing needle. The medical device includes a cannula assembly for coupling the fluid into a cannula that is inserted into the patient. The cannula assembly has a first locking element disposed in a fixed position with respect to the cannula. Coupling the line to the cannula assembly is an infusion flap. The infusion flap includes a second locking element for engaging the first locking element of the cannula assembly and a lift tab for disconnecting the infusion flap from the cannula assembly. Coupling of the first and second locking elements requires initial mating of the infusion flap and cannula assembly, followed by locking through rotation of the infusion flap with respect to the cannula assembly.

[0010] In a related embodiment, the cannula assembly may include a septum housing defining a core coupled to the cannula. The septum housing includes a first septum positioned within the core at a first position, such that when the infusion flap and the cannula assembly are locked, the tubing needle penetrates the first septum so as to permit fluid communication between the line and the cannula. The septum housing may also include a second septum positioned within the core at a second position, such that an insertion needle can be introduced through the second septum into the cannula.

[0011] In another related embodiment of the invention, the cannula assembly further includes a flexible tube in fluid communication with both the cannula and a septum. When the flexible tube is in a first position, an insertion needle can be introduced through the septum into the cannula, and when the flexible tube is in a second position, a tubing needle inserted through the septum permits fluid communication between the line and the cannula.

[0012] In yet another related embodiment of the invention, the device further includes an insertion flap. The insertion flap includes an insertion needle for inserting through the septum and terminating with a sharp distal end disposed slightly beyond a distal end of the cannula. The insertion flap has an interface for coupling to an auto-insertion device.

[0013] In other related embodiments, the first locking element may be a locking lug and the second locking

element is a lug receptacle, or vice versa. The cannula assembly may include a soft overmolded body.

[0014] In accordance with another embodiment of the invention, a medical device for delivery of a fluid to a patient from a line terminating in a tubing needle is presented that includes a a cannula for insertion into the patient. A flexible tube is in fluid communication with both the cannula and a septum. When the flexible tube is in a first position, an insertion needle can be introduced through the septum into the cannula, and when the flexible tube is in a second position, a tubing needle inserted through the septum permits fluid communication between the line and the cannula.

[0015] In accordance with related embodiments of the invention, the device further includes an infusion flap that includes the tubing needle and a cannula assembly that includes the cannula. When the infusion flap and cannula assembly are mated, the tubing needle passes through the septum permitting fluid communication between the line and the cannula. The device may further include a locking mechanism for securing the infusion flap to the cannula assembly. The locking mechanism may include a locking tang on the infusion flap, the locking tang inserted into a tang receptacle on the cannula assembly. As another example, the locking mechanism may include a first locking element disposed on a septum housing containing the septum, and a second locking element disposed on the infusion flap. Coupling the first and second locking elements may require initial mating of the infusion flap and cannula assembly followed by locking through rotation of the infusion flap with respect to the cannula assembly. In various embodiments, the first locking element is a locking lug and the second locking element is a lug receptacle, or vice versa. In various embodiments, the septum housing can be rotated to a mating position that allows the infusion flap and the septum housing to be mated together and the infusion flap rotated with respect to the cannula assembly to lock the infusion flap onto the septum housing. The septum housing can then be rotated to a stable position that prevents rotation of the infusion flap.

[0016] In accordance with another embodiment of the invention, a method for delivering a fluid to a patient from a line terminating in a tubing needle is presented. The method includes inserting an insertion needle through a septum and a cannula, the septum and the cannula having a relative orientation. The cannula is inserted into tissue of a patient. After withdrawing the insertion needle from the cannula and the septum, a tubing needle is inserted through the septum. The relative orientation between the septum and the cannula is varied and the fluid is delivered through the line and the cannula.

[0017] In accordance with still another embodiment of the invention, a tubing set for coupling a fluid delivery device containing a fluid source into fluid communication with a cannula assembly is presented. The tubing set includes a length of tubing having a first end and a second end. A hub is coupled to the first end for connecting to the fluid delivery device. The hub includes a controller which allows the fluid delivery device to transition from a first configuration to a second configuration. An infusion flap is coupled to the second end for connecting to the cannula assembly.

[0018] In another related embodiment of the invention, the first configuration of the fluid delivery device may be a reservoir load position and the second configuration may be an operate position. The controller may be capable of allowing the fluid delivery device to transition from the second configuration to the first configuration. The controller may include a flange that interfaces with the fluid delivery device. In other embodiments, the controller may include an electronic circuit to the fluid delivery device, or generating one of an optical signal and magnetic field. The hub may include a luer connector for mating with the fluid delivery device.

[0019] In another related embodiment of the invention, the fluid delivery device may be an infusion pump having a reservoir with variable volume and a drive assembly. The drive assembly includes a barrel having a clearance hole in a barrel end, the barrel characterized by a longitudinal barrel axis of rotation. The drive assembly further includes a plunger rod inserted through the clearance hole, and a rotating drive screw with external threads. The external threads removably engage with threads on the plunger rod by rotating the barrel about the barrel axis. The external threads are engaged with the threads on the plunger rod when in the first configuration and the external threads are disengaged with the threads on the plunger rod when in the second configuration. The controller is capable of allowing the barrel to rotate so as to bring the rod threads in and out of mechanical engagement with the drive screw threads. The controller may include a flange for dislodging a locking tab on the barrel, allowing the barrel to rotate.

[0020] In accordance with still another embodiment of the invention, a conduit for coupling to a fluid delivery device is presented. The conduit includes a length of tubing having a first end. A hub is coupled to the first end for connecting to the fluid delivery device. The hub includes a controller which allows the fluid delivery device to transition from a first configuration to a second configuration.

[0021] In related embodiments of the invention, the first configuration may be a reservoir load position and the second configuration may be an operate position. The hub may include a luer connector for mating with the fluid delivery device. The controller may include a flange that interfaces with the fluid delivery device. The controller may include an electronic circuit to the fluid delivery device, or generating one of an optical signal and magnetic field.

[0022] In still yet another embodiment of the invention, a method of providing flow of a fluid from a fluid delivery device to a porous medium is presented. The method includes coupling a hub, permanently affixed to a tube set, to the fluid delivery device. Configuration of the fluid delivery device is controlled via the hub. The tube set is coupled to the porous medium so as to allow fluid to flow from the fluid delivery device to the porous medium.

[0023] In related embodiments of the invention, controlling the configuration of the fluid delivery device may include allowing the pump to move from a first configuration to a second configuration. The first configuration of the fluid delivery device may be a load position and the second configuration may be an operate position. Controlling the configuration of the fluid delivery device may include moving a flange on the hub or generating one of a magnetic field and an optical signal. The fluid delivery device may be an infusion pump.

BRIEF DESCRIPTION OF THE DRAWINGS

[0024] The foregoing features of the invention will be more readily understood by reference to the following detailed description, taken with reference to the accompanying drawings, in which:

[0025] **FIG. 1** is a perspective view of an infusion set **10** for delivery of a fluid to a patient, in accordance with one embodiment of the present invention;

[0026] **FIG. 2** is a further breakdown of the infusion set shown in **FIG. 1**, in accordance with one embodiment of the present invention;

[0027] **FIG. 3** is a cross-sectional view of a cannula assembly with an insertion flap attached (and locked), in accordance with one embodiment of the present invention;

[0028] **FIG. 4** is a cross-sectional view of an infusion flap mated (and locked) to a cannula assembly, in accordance with one embodiment of the present invention;

[0029] **FIG. 5** is a side view of the embodiment of **FIG. 4** with the infusion flap in position for mating with the cannula assembly;

[0030] **FIG. 6** is a perspective view of the embodiment of **FIG. 4** with the infusion flap mated to the cannula assembly;

[0031] **FIG. 7** is a top view of the embodiment of **FIG. 4** with the tubing set locked to the cannula assembly;

[0032] **FIG. 8** is a side view of the embodiment of **FIG. 4** with the tubing set locked to the cannula assembly;

[0033] **FIG. 9** is a cross-sectional view of an infusion flap mated (and locked) to a cannula assembly that includes a first septum and a second septum contained with a septum housing, in accordance with one embodiment of the present invention;

[0034] **FIG. 10** is a top view of the embodiment of **FIG. 9** with the infusion flap in position for mating with the cannula assembly;

[0035] **FIG. 11** is a side view of the embodiment of **FIG. 9** with the infusion flap in position for mating with the cannula assembly;

[0036] **FIG. 12** is a perspective view of the embodiment of **FIG. 9** with the infusion flap mated to the cannula assembly;

[0037] **FIG. 13** is a cross-sectional view of an infusion flap mated (and latched) to a cannula assembly, wherein the cannula assembly includes a single septum located in a rotatable septum housing, in accordance with one embodiment of the present invention;

[0038] **FIG. 14** is a perspective view of the embodiment of **FIG. 13** with the infusion flap in position for mating with a cannula assembly;

[0039] **FIG. 15** is a side view of the embodiment of **FIG. 13** with the infusion flap in position for mating with the cannula assembly;

[0040] **FIG. 16** is a perspective view of the embodiment of **FIG. 13** with the infusion flap mated and latched onto the cannula assembly;

[0041] **FIG. 17** is a side view of the embodiment of **FIG. 13** with the infusion flap mated and latched onto the cannula assembly;

[0042] **FIG. 18** is a perspective view of embodiment of **FIG. 13**, with the infusion flap latched to the septum housing and the septum housing rotated 90 degrees;

[0043] **FIG. 19** is a cross-sectional view of an infusion flap that includes a single septum located in a rotatable septum housing, in accordance with one embodiment of the invention;

[0044] **FIG. 20** is a perspective view of the embodiment of **FIG. 19** with the infusion flap in position for mating with the cannula assembly;

[0045] **FIG. 21** is a top view of the embodiment of **FIG. 19** with the infusion flap in position for mating with the cannula assembly;

[0046] **FIG. 22** is a side view of the embodiment of **FIG. 19** with the infusion flap in position for mating with the cannula assembly;

[0047] **FIG. 23** is a perspective view of the embodiment of **FIG. 19** with the infusion flap mated with the cannula assembly **1902**;

[0048] **FIG. 24** is a side view of the embodiment of **FIG. 19** with the infusion flap mated with the cannula assembly **1902**;

[0049] **FIG. 25** is a perspective view of the embodiment of **FIG. 19** with the locking lug engaged with the lug receptacle by rotating the infusion flap **25**;

[0050] **FIG. 26** is a perspective view of the embodiment of **FIG. 19** after the locking lug is engaged with the lug receptacle and the septum housing **1904** is rotated;

[0051] **FIG. 27** is a top-level view of a hub and infusion pump, in accordance with one embodiment of the present invention;

[0052] **FIG. 28** is an exploded view of a drive mechanism for the infusion pump of **FIG. 27**;

[0053] **FIG. 29** shows an embodiment of a pump barrel locking mechanism of **FIG. 27**;

[0054] **FIG. 30** is an exploded view of the pump barrel locking mechanism of **FIG. 27**;

[0055] **FIG. 31** shows the relation of the drive screw to the plunger rod for the infusion pump of **FIG. 27** when in a loading position;

[0056] **FIG. 32** shows the relation of the drive screw to the plunger rod for the infusion pump of **FIG. 27** when in an engaged position;

[0057] **FIG. 33** shows a connection between the locking hub and the reservoir in accordance with one embodiment of the present invention;

[0058] **FIG. 34** shows another connection between the locking hub and the reservoir in accordance with one embodiment of the present invention;

[0059] **FIG. 35** shows an adapter for using a small diameter reservoir with the pump assembly in accordance with one embodiment of the present invention;

[0060] **FIG. 36** is an on-axis view of the adapter in **FIG. 35** when the pump is in a loading position; and

[0061] **FIG. 37** is an on-axis view of the adapter in **FIG. 35** when the pump is in an engaged position.

DETAILED DESCRIPTION OF SPECIFIC EMBODIMENTS

[0062] **FIG. 1** is an overall view of an infusion set **10**, in accordance with one embodiment of the invention, for delivery of a fluid to a patient. It may also be used to deliver fluid from a fluid delivery device to a porous medium. In the description, an infusion pump will serve as an example of a fluid delivery device and a human tissue will serve as an example of a porous medium. Fluid may be, for example, a drug, such as insulin. Like numbers in successive figures refer to the same or similar items.

[0063] The infusion set **10** includes a tubing set **11**. The tubing set **11** includes tubing **13** that is attached at one end to a hub **12**. The hub **12** serves as an interface between the tubing **13** and a pump assembly (not shown). Attached to the other end of the tubing set **11** is an infusion flap **14** that interfaces with a cannula assembly **15**.

[0064] The cannula assembly **15** includes a cannula body **17**. Attached to the cannula body **17** is a cannula **16**, for subcutaneous insertion into the patient. The cannula **16** may be made of steel or alternatively, a soft and/or flexible material to help prevent patient discomfort, such as Teflon or other plastic. The cannula **16** may protrude from the bottom or side of the cannula body **17** at various angles. For example, without limitation, the cannula **16** may protrude from the front edge of the cannula body **17** at a shallow angle of 15-30 degrees. As another example, the cannula **16** may form a 90 degree angle with the bottom of the cannula body **17**. Further detail of the cannula assembly **15** is provided in subsequent drawings including **FIG. 2**.

[0065] Within the cannula body **17** is a passageway adapted to receive the proximal or upstream end of the cannula **16**. The passageway includes at least one self-sealing septum that can be penetrated, for example, by an infusion or insertion needle.

[0066] **FIG. 2** is a further breakdown of parts in the infusion set shown in **FIG. 1**. The cannula assembly may be fabricated, in accordance with one embodiment of the invention, by inserting the cannula **16** through a hole in a cannula locking ring **21**. The cannula locking ring **21** is then attached to a core insert **22** by a snap fit mechanism, ultrasonic welding, or other means known in the art. The proximal end of the cannula **16** is flared, such that it is captured and held in place between the core insert **22** and the locking ring **21**. Both the cannula locking ring **21** and core insert **22** may be made of plastic or other suitable material.

[0067] The core insert **22** defines a passageway having a first end and a second end. The first end receives the proximal end of the cannula **16**, as described above. The second end of the core insert **22** acts as septum housing **23**. A self-sealing septum **24** is inserted into the open end of the septum housing **23**, which is then ultrasonically flared to capture the septum **24** inside the core insert **22**. The core insert **22** and locking ring **21** are then overmolded to form a soft body **17** for user comfort.

[0068] The body **17** of the cannula assembly is typically a compact and low profile component. When seen from the top, the cannula body **17** may be, for example, circular, elliptical or triangular in shape and/or advantageously elongated for easy patient handling. All or a portion **201** of the body **17** may be made clear or transparent to facilitate viewing of the core insert **22** and/or infusion site.

[0069] The cannula **16** may be inserted subcutaneously with the aid of an insertion flap **25**. The insertion flap **25** includes an insertion needle **26**, typically made of steel, that assists the cannula **16** in penetrating the skin. After inserting the cannula **16**, the insertion flap **25** is removed, and the infusion flap **14** is removably attached to the cannula assembly **15** for delivery of fluid to the patient.

[0070] In accordance with one embodiment of the invention, **FIG. 3** shows a cross-sectional view of the cannula assembly **15** with the insertion flap **25** attached. The insertion flap **25** supports a proximal end of the insertion needle **26** which protrudes from the flap **25** and terminates in a sharp distal end. When the insertion flap **25** is not in use and is removed from the cannula assembly **15**, the sharp end of the insertion needle **26** may be covered by a needle guard **202** (shown in **FIG. 2**), which prevents accidental contact with the needle **26**.

[0071] The proximal end of the insertion needle **26** is seated within a cylindrical shaped open ended (female) connector **31** that slides onto and mates with the male septum housing **23** of the cannula assembly **15**. The distal end of the insertion needle **26** is inserted through the self-sealing septum **24**, through the core insert **22**, and into the cannula **16**. When the insertion flap **25** and septum housing **23** are fully mated, the sharp tip of the insertion needle **26** may extend slightly beyond the distal end tip of the cannula **16**. The insertion flap may interface with an auto-insertion device (not shown) that can be used, for example, by a patient lacking the dexterity or strength to subcutaneously insert the cannula **16** by him or her self. To interface with the auto-insertion device, the insertion flap **25** may include, for example, a flat top with a pair of wings **205** and **206** and mounting holes **203** and **204** for attaching the auto-insertion device (see **FIG. 2**). When manually inserting the cannula **16**, the patient grasps the attached insertion flap **25** and/or cannula body **17** and pushes the cannula **16**, with the insertion needle **26** inserted, into the infusion site. The infusion site may be prepped prior to insertion of the cannula **16** with a sterilizing fluid or by placement of a mounting patch onto the patient's skin, as known in the art. After the cannula **16** has been inserted into the patient, the insertion flap **25** and needle **26** is withdrawn from the cannula assembly **15**. The cannula assembly **15** can then be secured to the patient by peeling a cover off an adhesive strip coupled to the bottom of the cannula body **17**, and pressing the adhesive **281** against the patient's skin or mounting patch.

[0072] Referring back to **FIGS. 1 and 2**, upon securing the cannula assembly **15** to the patient, the infusion flap **14** is attached to the cannula assembly **15** permitting fluid communication between the tubing set **11** and the cannula **16**. The infusion flap **14** may attach to the top or one of sides of the cannula assembly **15**. In accordance with one embodiment of the invention, **FIG. 4** is a cross-sectional view of the infusion flap **14** mated (and locked) to the cannula assembly

15. The infusion flap **14** includes an infusion needle **42** attached to the inside of the tubing **13**, by, for example, a suitable adhesive. In various embodiments, the tubing may be microbore tubing. The proximal end of the infusion needle **42** is seated within a generally cylindrically shaped, open ended, female connector **45** on the infusion flap **14** that slides onto and mates with the male septum housing **23** of the cannula assembly **15**. The sharp, distal end of the infusion needle **42** typically does not extend beyond the open end of the female connector **45**, preventing inadvertent needle sticks and/or damage to the needle. When the infusion flap **14** is mated to the cannula assembly **15**, the infusion needle penetrates the septum **24**, allowing fluid in the tubing **13** to flow through the cannula **16**. The length of the infusion needle **42** is such that it does not protrude into, and damage the cannula **16**.

[**0073**] So as to prevent inadvertent separation of the infusion flap **14** and the cannula assembly **15**, a locking mechanism may be provided. The locking mechanism may include, without limitation, a locking receptacle **43** on the female connector **45** of the infusion flap **14** that engages a locking lug **44** on the core insert **22** of the cannula assembly. The locking lug **44** may be disposed on the septum housing **23**, for example. **FIG. 5** is a side view showing the infusion flap **14** in position for mating with the cannula assembly **15**. To slide the male septum housing **23** into the female connector **45**, an opening slot **51** of the receptacle **43** is aligned with the locking lug **44**. When fully inserted, the base wall of the female connector **45** may abut the distal end of the male septum housing **23**, and/or the distal end of the infusion flap **14** may make contact with the body of the cannula assembly **15**, such that the infusion needle pierces the septum contained within the septum housing.

[**0074**] **FIG. 6** is a detailed perspective view showing the infusion flap **14** when mated to the cannula assembly **15**. To lock the infusion flap **14** onto the cannula assembly **15**, the locking lug **44** (shown in **FIG. 4**) is engaged with the lug receptacle **43** by rotating the infusion flap **14** clockwise. The locking lug **44** (shown in **FIG. 4**) prevents the infusion flap **14** from disconnecting with the cannula assembly **15** when a longitudinal force is applied, such as when the tubing **13** is pulled on. In various embodiments, the infusion flap **14** may also include a snap fit mechanism to prevent the infusion flap **14** from inadvertently rotating open. The snap fit mechanism may include, without limitation, a detent **62** that, when the infusion flap **14** is rotated clockwise, fits into a notch **63** in the cannula body **17**.

[**0075**] **FIGS. 7 and 8** show a top view and side view of the tubing set **11** locked to the cannula assembly. The infusion flap **14** can be easily removed from the cannula assembly **15** by lifting up on a lift tab **71** on the infusion flap **14** and rotating the infusion flap **14** counter-clockwise so as to align the slot **51** (shown in **FIG. 4**) with the locking lug **44** (shown in **FIG. 4**). The infusion flap **14** is then pulled apart from the cannula assembly **15** and the septum **24** (shown in **FIG. 4**) self-seals.

[**0076**] In accordance with another embodiment of the invention, **FIG. 9** shows a cross-sectional view of an infusion flap **97** attached to a cannula assembly **91** that includes a first septum **92** and a second septum **93** contained with a septum housing **94**. The septum housing **94** defines a passageway that is coupled to a cannula **95**. The first septum **92** is advantageously located for penetration by an insertion needle **96**, while the second septum is positioned for penetration by an infusion needle **99**. To subcutaneously insert the cannula **95**, the insertion needle **96** is inserted through the first septum **92** and into the cannula **95**. After cannula **95** insertion, the insertion needle **96** is removed and the first septum **92** self-seals to prevent fluid leakage. The cannula assembly **91** attaches to the user's body or mounting patch with an adhesive.

[**0077**] As in previous embodiments, tubing **98** is coupled at a first end to the infusion flap **97**, and to a hub (not shown) that interfaces with a pump assembly at a second end. An infusion needle **99** is attached to the inside of the tubing **98** at the first end and is seated within a generally cylindrically shaped, open ended, female connector **901** on the infusion flap **97**. When the infusion flap **97** is mated to the cannula assembly **91**, the connector **901** slides onto and mates with the male septum housing **94**, such that the infusion needle **99** pierces the second septum **93** allowing fluid in the tubing **98** to flow to the cannula **95**.

[**0078**] **FIGS. 10 and 11** are a top view and a side view of the infusion flap **97** in position for mating with the cannula assembly **91**. The insertion needle **96** has been removed. To prevent inadvertent separation of the infusion flap **97** and the cannula assembly **91**, a locking mechanism for securing the infusion flap **97** to the cannula assembly **91** may be provided. For example, the cannula assembly **91** may include a lug receptacle **1001** (see **FIG. 10**) that engages with a locking lug **1101** (see **FIG. 11**) on the infusion flap **97**. To lock the infusion flap **97** to the cannula assembly **91**, the locking lug is engaged with the lug receptacle **1001** by rotating the infusion flap clockwise. Engagement in this fashion prevents disconnection of the tubing when pulled on. **FIG. 12** shows the infusion flap **97** mated and locked onto the cannula assembly **91**.

[**0079**] To remove the infusion flap **97** from the cannula assembly **91**, one lifts up on a lift tab **1201** and rotates the infusion flap **97** counter-clockwise. The infusion flap **97** is then pulled apart from the cannula assembly **91** and the second septum **93** (see **FIG. 9**) self-heals.

[**0080**] In accordance with another embodiment of the invention, **FIG. 13** is a cross-sectional view of an infusion flap **1301** attached to a cannula assembly **1302**, wherein the cannula assembly **1302** includes a single septum **1303** located in a rotatable septum housing **1304**. A single septum **1303** and rotatable septum housing **1304** advantageously prevents leakage problems inherent in dual septum designs, while still permitting the septum housing **1304** to be positioned, for example, vertically for insertion of an insertion needle **1305**, or horizontally after mating with the infusion flap **1301**.

[**0081**] The septum housing **1304** is rotatably attached to the cannula assembly by, for example, a pivot or hinge mechanism. Attached to the septum housing **1304** and/or septum **1303** is a first end of a flexible tube **1306**, which is further attached at a second end to a proximal end of a cannula **1307** mounted within the cannula assembly **1302**. The flexible tubing **1306** may be attached to the septum housing **1304** and/or cannula assembly **1302** using, without limitation, a suitable adhesive.

[**0082**] Tubing **1308** is coupled at a first end to the infusion flap **1301**, and to a hub (not shown) that interfaces with a

pump assembly at a second end. An infusion needle **1309** is attached to the inside of the tubing **1308** at the first end and is seated within an open ended, female connector **1310** on the infusion flap **1301**. The connector **1310** and male septum housing **1304** may be of variable shape, such as, for example, a cylindrical, rectangular, or square shape. When the infusion flap **1301** is mated to the cannula assembly **1302**, the connector **1310** slides onto and mates with the male septum housing **1304**, such that the infusion needle **1309** pierces the septum **1303** allowing fluid in the tubing **1308** to flow to the cannula **1307**. In various embodiments, the infusion needle **1305** is slightly larger than the insertion needle **1305**, so as to seal the hole previously created by the insertion needle **1305**.

[**0083**] The infusion flap **1301** is easily connected and disconnected to the cannula assembly **1302**. **FIGS. 14 and 15** show a perspective view and a side view, respectively, of the infusion flap **1301** in position for mating with the cannula assembly **1302**. The septum housing **1304** has been rotated such that it is perpendicular to the longitudinal axis of the cannula assembly **1302**, so as to allow for insertion of the infusion flap **1301**. The insertion needle **1305** has been removed. To prevent inadvertent separation of the infusion flap **1301** and the cannula assembly **1302**, a locking mechanism may be provided. The locking mechanism may include, for example, locking tangs **1401** and **1402** on the infusion flap **1301** which engage with tang receptacles **1403** and **1404** located on the cannula assembly **1302** when the infusion flap **1301** is pushed onto the cannula assembly **1302**. **FIGS. 16 and 17** show a perspective view and a side view, respectively, of the infusion flap **1301** mated and latched onto the cannula assembly **1302**. At this point, the infusion needle **1309** penetrates the septum **1303** in the septum housing **1304** (see **FIG. 13**). Upon being mated and latched onto the cannula assembly **1302**, the infusion flap **1301** and septum housing **1304** may be rotated **90** degrees, such that the infusion flap lays flat against the cannula assembly **1302**, as shown in **FIG. 18**. A detent (not shown) may latch the infusion flap **1301** to the cannula assembly **1302** with a snap action. The flexible tube **1306** bends as the septum housing **1304** rotates, providing a leak tight fluid path between the tubing **1308** and the cannula **1307**.

[**0084**] To remove the infusion flap **1301** from the cannula assembly **1302**, one lifts up on, and rotates the infusion flap **1301** 90 degrees so that the septum housing **1304** is once again perpendicular to the longitudinal axis of the cannula assembly **1302**. The infusion flap **1301** is then disengaged by pinching the locking tangs **1401** and **1402** towards each other, and pulling the infusion flap **1301** away from the cannula assembly **1302**.

[**0085**] In accordance with another embodiment of the invention, **FIG. 19** is a cross-sectional view of an infusion flap **1901** attached to a cannula assembly **1902** that, similar to the above described embodiment, includes a single septum **1903** located in a rotatable septum housing **1904**, but which has an alternative locking mechanism. **FIG. 19** shows the infusion flap **1901** and the cannula assembly **1902** in a mated position, just prior to being latched. The insertion needle has been removed **1905**.

[**0086**] The open ended female connector **1910** (see **FIG. 20**) on the infusion flap **1901**, which seats the infusion needle **1909**, is generally cylindrical shaped, such that the connector can be slid onto and mated with the male septum housing **1904**. **FIGS. 20, 21**, and **22** show a perspective view, a top view and a side view, respectively, of the infusion flap **1901** in position for mating with the cannula assembly **1902**. The male septum housing **1904** includes a locking lug **2001** which mates with a lug receptacle **2002** on the connector **1910**. The user aligns recepticle slot **2003** on the female connector **1910** with the locking lug **2001**, such that the female connector **1910** can be slid onto, and mated with, the male septum housing **1904**. **FIGS. 23 and 24** show a perspective view and a side view, respectively, of the infusion flap **1901** mated with the cannula assembly **1902**. At this point, the infusion needle **1909** pierces the septum **1903** (see **FIG. 19**).

[**0087**] The locking lug **2001** is then engaged with the lug receptacle **2002** by rotating the infusion flap **25** counterclockwise (or clockwise depending on the location of the lug recepticle), as shown in **FIG. 25**. After engagement, the infusion flap **1901** and septum housing **1904** can be rotated 90 degrees, such that the infusion flap **1901** lays flat against the cannula assembly **1902**, as shown in **FIG. 26**. A detent (not shown) may latch the infusion flap **1901** to the cannula assembly **1902** with a snap action. The flexible tube **1906** bends as the septum housing **1904** rotates, providing a leak tight fluid path between the tubing **1908** and the cannula **1907**.

[**0088**] To remove the infusion flap **1901** from the cannula assembly **1902**, one lifts up on a lift tab **2601** on the infusion flap **1901** and rotates the infusion flap **1901** 90 degrees so that the septum housing **1904** is perpendicular to the longitudinal axis of the cannula assembly **1902**. The infusion flap **1901** is then disengaged by rotating the infusion flap 90 degrees clockwise, and pulling the infusion flap **1901** away from the cannula assembly **1902**.

[**0089**] Referring back to **FIG. 1**, the tubing **13** attaches at one end to a hub **12** for interfacing and receiving a fluid from a fluid delivery device (not shown). The fluid may be a drug, such as insulin. The fluid delivery device may be, without limitation, an infusion pump assembly.

[**0090**] The hub **12** may be of various shape. For example, the hub **12** may be asymmetric, circular, or elliptical in shape. The hub **12** may be made of plastic, metal, or other suitable material. The hub **12** may include a receptacle for receiving the tubing **13**. The tubing **13** may be permanently attached to the hub **12** using a suitable adhesive. In other embodiments, the tubing **13** may be removably attached to the hub **12** using, for example, a luer connection.

[**0091**] The hub **12** may include a controller which allows the fluid delivery device to transition from a first configuration to a second configuration. The first and second configuration may be, for example, a pump reservoir load position and a pump operate position, respectively. While the controller is implemented as a flange in following FIGS. **27-37**, it is to be understood that the controller can be implemented in a wide variety of forms, such as, but not limited to, mechanical, electrical, magnetic, or optical forms. For example, without limitation, the hub **12** may include a flange or other mechanical protrusion that interfaces with the pump assembly, or the hub **12** may generate a magnetic field or optical signal that is sensed by a Hull Effect sensor or optical sensor positioned on the pump assembly, respectively. In still another embodiment, a wire in the hub **12** may complete a circuit in the pump assembly.

[**0092**] **FIG. 27** is an overall view of a hub and infusion pump according to one embodiment of the present invention. A pump assembly **2710** contains the components needed to cause a reservoir assembly **2715** to deliver medi-

cation to a user. The reservoir assembly **2715** may contain enough medication, such as insulin, for several days for a typical user. A hub **2725** has a coupling to the reservoir assembly, the hub **2725** permanently affixed to a tubing set **2720** for delivery of the fluid to a patient.

[**0093**] **FIG. 28** shows an exploded view of the drive mechanism of the infusion pump. The reservoir assembly **2715** comprises a reservoir **2830**, plunger **2835** and plunger rod **2840**. The reservoir **2830** contains the medication for delivery to the user and is of variable interior volume. The interior volume is the liquid capacity of the reservoir. The plunger **2835**, inserted into the bottom of the reservoir, causes the volume of the reservoir to change as the plunger is displaced along the longitudinal axis of the reservoir. The plunger rod **2840** is connected to the plunger with the rod's longitudinal axis displaced from and parallel to the longitudinal axis of the reservoir. The plunger rod **2840** is threaded for at least a portion of the rod's length. A cylindrical pump barrel **2845** receives the reservoir assembly **2715**. The pump barrel constrains the plunger rod, orienting the rod along the longitudinal axis of the barrel. The pump barrel **2845** is contained in the pump assembly and may contain a locking mechanism, such as a locking tab, to prevent rotation of the pump barrel with respect to the assembly. A gear box **2855** in the pump assembly **2715** includes a drive screw **2850** along with motor and gears to turn the drive screw. The drive screw **2850** is threaded and the screw's longitudinal axis is aligned parallel to and displaced from the longitudinal axis of the pump barrel. The hub **2725** has a coupling to the top of the reservoir.

[**0094**] **FIG. 29** shows a pump barrel locking mechanism for an embodiment of the invention. The pump barrel **2845** includes a clearance hole **3072** in one end (shown in **FIG. 31**) that guides the plunger rod **2840** during insertion of the reservoir assembly **2715** into the barrel **2845**. To ensure that the drive screw **2850** does not interfere with the plunger rod **2840** during insertion of the reservoir assembly, the pump barrel **2845** maintains a fixed position relative to the pump assembly **2710**. The position of the pump barrel relative to the pump assembly may be maintained, for example, by a locking tab **3060** included in the pump barrel that engages a pump barrel stop **3065** in the pump assembly **10**. **FIG. 30** is a detailed view of the pump barrel showing the locking tab **3060** and pump barrel stop **3066**. Referring back to **FIG. 29**, the hub **2725** includes a flange **2970** which dislodges the locking tab **3060** from the barrel stop **3065** when the hub **2725** turns, allowing the hub **2725** to rotate the pump barrel **2845**.

[**0095**] **FIGS. 31 and 32** are views along the longitudinal axis of the pump barrel **2845** showing the relation of the drive screw **2850** to the plunger rod **2840** in a loading position and in an engaged position, respectively. The reservoir assembly **2715** is positioned for loading so that the plunger rod **2840** does not contact the drive screw **2850**, as shown in **FIG. 31**. With the pump barrel **2845** positioned appropriately with respect to the pump assembly **2710**, the plunger rod **2840** clearance from the drive screw **2850** is determined by the placement of the clearance hole **3072** in the pump barrel **2845** base, which hole **3072** receives and guides the plunger rod **2840**. The clearance hole **3072** may be tapered to ease insertion of the rod **2840**. The drive screw **2850** fits in the clearance hole **3072** in the pump barrel **2845**. Once the reservoir assembly **2715** is inserted into the pump assembly **2710**, the barrel **2845** is rotated by the locking hub **2725**, causing the plunger rod **2840** to turn and to engage the drive screw **2850**, as shown in **FIG. 32**. This embodiment advantageously simplifies reservoir loading.

[**0096**] In a specific embodiment of the invention, the plunger rod threads and the drive screw threads are buttress threads. This embodiment advantageously addresses eliminating reaction forces on the plunger rod normal to the direction of the rod's longitudinal axis. Such reaction forces may cause the rod to deflect and skip a thread on the drive screw, resulting in under delivery of medication to the user. Buttress threads eliminate the normal component of the reaction force.

[**0097**] In an embodiment of the present invention, the locking hub **2725** may be connected to the reservoir **2830** by a tapered luer connection, as shown in **FIG. 33**. The reservoir has a male luer taper **3375** integrally molded into the reservoir's top. Surrounding the male luer is an annulus **3378** with an internal female thread. Similarly, the hub **2725** includes the mating female luer and threaded male connection.

[**0098**] In another embodiment of the invention, a needle connection is provided between reservoir **2830** and hub **2725**. As shown in **FIG. 34**, the reservoir includes a rubber septum **3480** that is attached to the reservoir with a crimped metal collar. A needle **3485**, integral to the hub, pierces the septum and fluid can then flow from the reservoir to the tubing set.

[**0099**] In a further embodiment of the invention, as shown in **FIG. 35**, an adapter **3595** is provided to permit a reservoir **3590** whose diameter is substantially smaller than the diameter of the pump barrel **2845** to be used with the pump assembly **2710**. The adapter **3590** may be a separate component or may be integrated into the locking hub **2725**. The adapter **3595** aligns and offsets the reservoir's **3590** axis parallel to the longitudinal axis of the pump barrel so that the plunger rod **2840**, when rotated, mates with the drive screw. **FIGS. 36 and 37** shows an on-axis view of the small diameter reservoir **3590** when placed in the adapter **3595** in a loading position and in an engaged position, respectively. As will be apparent, the offset provided by the adapter allows the plunger rod **3840**, when mated with the plunger **3835** and reservoir **3590**, to engage the drive screw **3850** in the same fashion as for the embodiment shown in **FIGS. 31 and 32**.

[**0100**] Having described various illustrative embodiments of the present invention, some of its advantages and optional features, it will be apparent that such embodiments are presented by way of example only and not by way of limitation. Those skilled in the art could readily devise alterations and improvements on these embodiments, as well as additional embodiments, without departing from the spirit and scope of the invention. All such modifications are within the scope of the invention as claimed.

What is claimed is:

1. A medical device for delivery of a fluid to a patient from a line terminating in a tubing needle, the medical device comprising:

a cannula assembly for coupling the fluid into a cannula for insertion into the patient, the cannula assembly having a first locking element disposed in a fixed position with respect to the cannula; and

an infusion flap for coupling the line to the cannula assembly, the infusion flap comprising:

a second locking element for engaging the first locking element of the cannula assembly; and

a lift tab for disconnecting the infusion flap from the cannula assembly, wherein coupling of the first and second locking elements requires initial mating of the infusion flap and cannula assembly followed by locking through rotation of the infusion flap with respect to the cannula assembly.

2. The medical device according to claim 1, where the first locking element is a locking lug and the second locking element is a lug receptacle.

3. The medical device according to claim 1, wherein the first locking element is a lug receptacle and the second locking element is a locking lug.

4. The medical device according to claim 1, wherein the cannula assembly includes a septum housing defining a core coupled to the cannula, the septum housing including a first septum positioned within the core at a first position, such that when the infusion flap and the cannula assembly are locked, the tubing needle penetrates the first septum so as to permit fluid communication between the line and the cannula.

5. The medical device according to claim 4, wherein the septum housing includes a second septum positioned within the core at a second position, such that an insertion needle can be introduced through the second septum into the cannula.

6. The medical device according to claim 1, wherein the cannula assembly includes a soft overmolded body.

7. A medical device according to claim 1, the cannula assembly further including:

a flexible tube in fluid communication with the cannula; and

a septum in fluid communication with flexible tube, wherein, when the flexible tube is in a first position, an insertion needle can be introduced through the septum into the cannula, and when the flexible tube is in a second position, a tubing needle inserted through the septum permits fluid communication between the line and the cannula.

8. The device according to claim 1, further comprising an insertion flap, the insertion flap including an insertion needle for inserting into the passagway through the septum, the insertion flap when inserted further extending through the cannula and terminating with a sharp distal end disposed slightly beyond a distal end of the cannula.

9. The device according to claim 1, wherein the insertion flap has an interface for coupling to an auto-insertion device.

10. A medical device for delivery of a fluid to a patient from a line terminating in a tubing needle, the medical device comprising:

a cannula for insertion into the patient;

a flexible tube in fluid communication with the cannula; and

a septum in fluid communication with the flexible tube, wherein when the flexible tube is in a first position, an insertion needle can be introduced through the septum into the cannula, and when the flexible tube is in a second position, a tubing needle inserted through the septum permits fluid communication between the line and the cannula.

11. The device according to claim 10, further comprising:

an infusion flap that includes the tubing needle; and

a cannula assembly that includes the cannula;

wherein when the infusion flap and cannula assembly are mated, the tubing needle passes through the septum permitting fluid communication between the line and the cannula.

12. The device according to claim 11, further comprising a locking mechanism for securing the infusion flap to the cannula assembly.

13. The device according to claim 12, wherein the locking mechanism includes a locking tang on the infusion flap, the locking tang inserted into a tang receptacle on the cannula assembly.

14. The medical device according to claim 12, wherein the septum is disposed in a septum housing, and the locking mechanism includes a first locking element disposed on the septum housing and a second locking element disposed on the infusion flap, wherein coupling of the first and second locking elements requires initial mating of the infusion flap and cannula assembly followed by locking through rotation of the infusion flap with respect to the cannula assembly.

15. The medical device according to claim 14, where the first locking element is a locking lug and the second locking element is a lug receptacle.

16. The medical device according to claim 14, wherein the first locking element is a lug receptacle and the second locking element is a locking lug.

17. The device according to claim 14, wherein the septum housing can be rotated to a mating position that allows the infusion flap and the septum housing to be mated together and the infusion flap rotated with respect to the cannula assembly to lock the infusion flap onto the septum housing, and

wherein the septum housing can then be rotated to a stable position that prevents rotation of the infusion flap.

18. The device according to claim 10, further comprising an insertion flap, the insertion flap including an insertion needle for inserting into the passagway through the septum, the insertion flap when inserted further extending through the cannula and terminating with a sharp distal end disposed slightly beyond a distal end of the cannula.

19. The device according to claim 18, wherein the insertion flap has an interface for coupling to an auto-insertion device.

20. A method for delivering a fluid to a patient from a line terminating in a tubing needle, the method comprising,

inserting an insertion needle through a septum and a cannula, the septum and the cannula having a relative orientation;

inserting the cannula into tissue of a patient;

withdrawing the insertion needle from the cannula and the septum;

inserting the tubing needle through the septum;

varying the relative orientation between the septum and the cannula; and

delivering a fluid through the line and the cannula.

21. A tubing set for coupling a fluid delivery device into fluid communication with a cannula assembly, the fluid delivery device having a first configuration and a second configuration, the tubing set comprising:

a length of tubing having a first end and a second end;

a hub coupled to the first end for connecting to the fluid delivery device, the hub including a controller for allowing fluid delivery device to transition from the first configuration to the second configuration; and

an infusion flap coupled to the second end for connecting to the cannula assembly.

22. The tubing set according to claim 21, wherein the first configuration of the source is a reservoir load position and the second configuration is an operate position.

23. The tubing set according to claim 21, wherein the controller is capable of allowing the fluid delivery device to transition from the second configuration to the first configuration.

24. The tubing set according to claim 21, wherein the controller includes a flange that interfaces with the fluid delivery device.

25. The tubing set according to claim 21, wherein the controller includes generating one of an optical signal and magnetic field.

26. The tubing set according to claim 21, wherein the controller includes an electronic circuit to the fluid delivery device.

27. The tubing set according to claim 21, wherein the hub includes a luer connector for mating with the fluid delivery device.

28. The tubing set according to claim 21, wherein the fluid delivery device is an infusion pump having a reservoir with variable volume and a drive assembly, the drive assembly including a barrel having a clearance hole in a barrel end, the barrel characterized by a longitudinal barrel axis of rotation, the drive assembly further including a plunger rod inserted through the clearance hole, and a rotating drive screw with external threads that removably engages with threads on the plunger rod by rotating the barrel about the barrel axis, the external threads engaged with the threads on the plunger rod when in the first configuration and the external threads disengaged with the threads on the plunger rod when in the second second configuration, and

wherein the controller is capable of allowing the barrel to rotate so as to bring the rod threads in and out of mechanical engagement with the drive screw threads.

29. The tubing set according to claim 28, wherein the controller includes a flange for dislodging a locking tab on the barrel, allowing the barrel to rotate.

30. The tubing set according to claim 20, wherein the cannula assembly has a first locking element disposed in a fixed position with respect to the cannula; and

the infusion flap includes:

a tubing needle;

a second locking element for engaging the first locking element of the cannula assembly; and

a lift tab for disconnecting the infusion flap from the cannula assembly, wherein coupling of the first and second locking elements requires initial mating of the infusion flap and cannula assembly followed by locking through rotation of the infusion flap with respect to the cannula assembly.

31. The tubing set according to claim 30, wherein the tubing needle penetrates a septum in the cannula assembly when the infusion flap is locked to the cannula assembly, permitting fluid communication between the tubing set and a cannula protruding from the cannula assembly.

32. A conduit for coupling to a fluid delivery device, the fluid delivery device having a first configuration and a second configuration, the conduit comprising:

a length of tubing having a first end; and

a hub coupled to the first end for connecting to the fluid delivery device, the hub including a controller for allowing the fluid delivery device to transition from the first configuration to the second configuration.

33. The conduit according to claim 32, wherein the first configuration is a reservoir load position and the second configuration is an operate position.

34. The conduit according to claim 32, wherein the hub includes a luer connector for mating with the fluid delivery device.

35. The conduit according to claim 32, wherein the controller includes a flange that interfaces with the fluid delivery device.

36. The conduit according to claim 32, wherein the controller includes generating one of an optical signal and magnetic field.

37. The conduit according to **32**, wherein the controller includes completing an electronic circuit in the fluid delivery device.

38. A method of providing flow of a fluid from a fluid delivery device to a porous medium, the method comprising:

coupling a hub to the fluid delivery device, the hub permanently affixed to a tube set;

controlling a configuration of the fluid delivery device via the hub; and

coupling the tube set to the porous medium so as to allow fluid to flow from the fluid delivery device to the porous medium.

39. The method according to claim 38, wherein controlling the configuration of the fluid delivery device includes allowing the pump to move from a first configuration to a second configuration.

40. The method according to claim 39, wherein the first configuration of the fluid delivery device is a load position and the second configuration is an operate position.

41. The method according to claim 38, wherein controlling the configuration of the fluid delivery device includes moving a flange on the hub.

42. The method according to claim 38, wherein controlling the configuration of the fluid delivery device includes generating one of a magnetic field and an optical signal.

43. The method according to claim 38, wherein the fluid delivery device is an infusion pump.

* * * * *