Jan. 10, 1956 A. W. VIBBER 2,729,932

TWISTING SPINDLE BALLOON CONTROL

Filed July 24, 1951 6 Sheets-Sheet 1

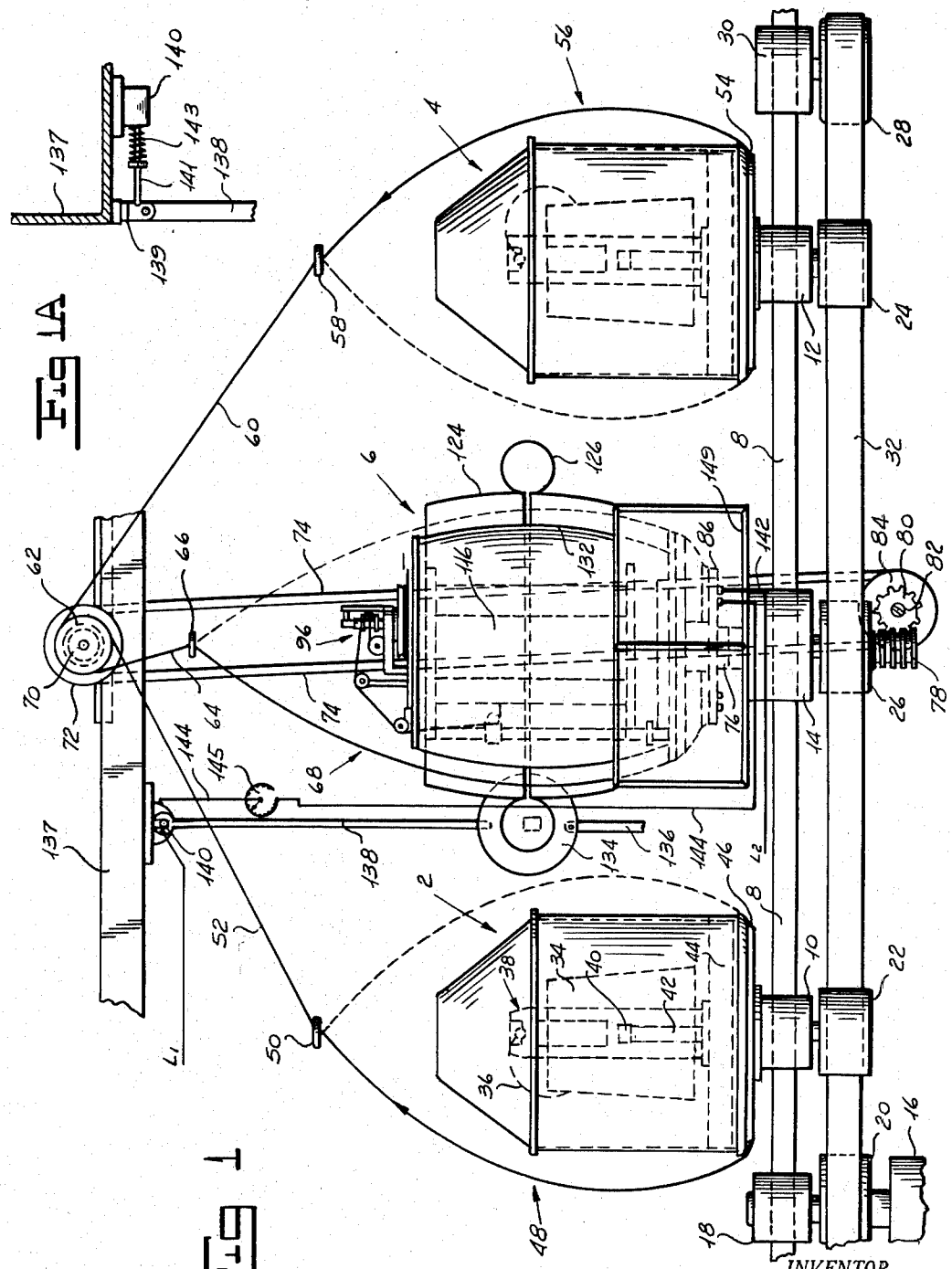

Fig 1A

Fig 1

INVENTOR.

Alfred W. Vibber

TWISTING SPINDLE BALLOON CONTROL

Filed July 24, 1951 6 Sheets-Sheet 2

Fig 2

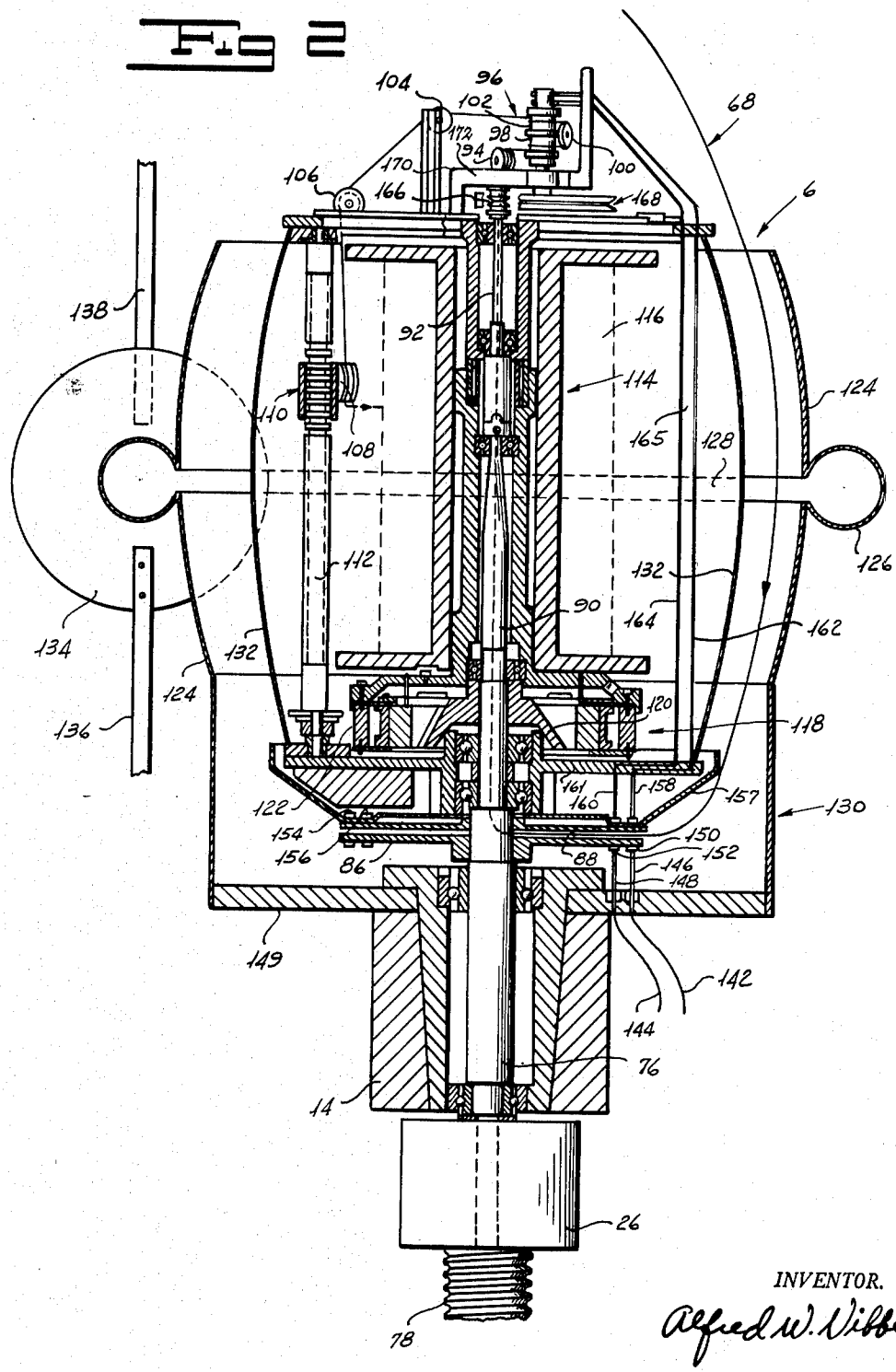

INVENTOR.
Alfred W. Vibber

TWISTING SPINDLE BALLOON CONTROL

Filed July 24, 1951 6 Sheets-Sheet 3

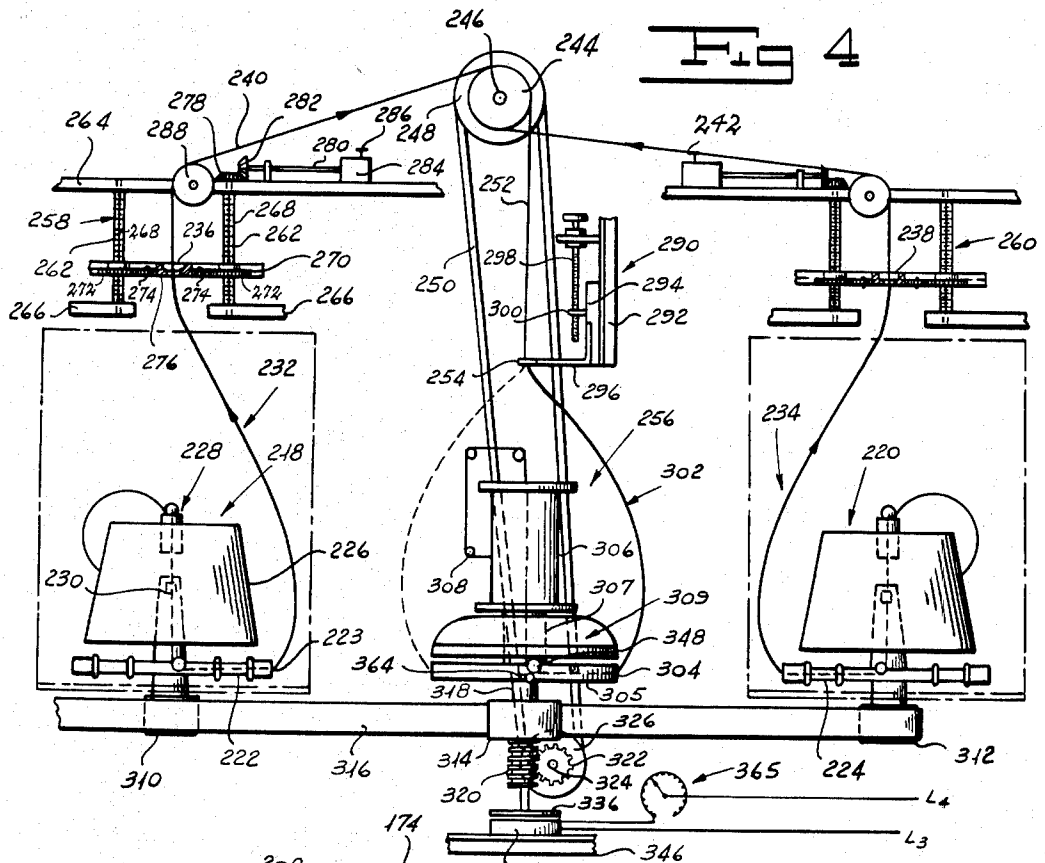

Fig 3

INVENTOR.

Alfred W. Vibber

TWISTING SPINDLE BALLOON CONTROL

Filed July 24, 1951 6 Sheets-Sheet 4

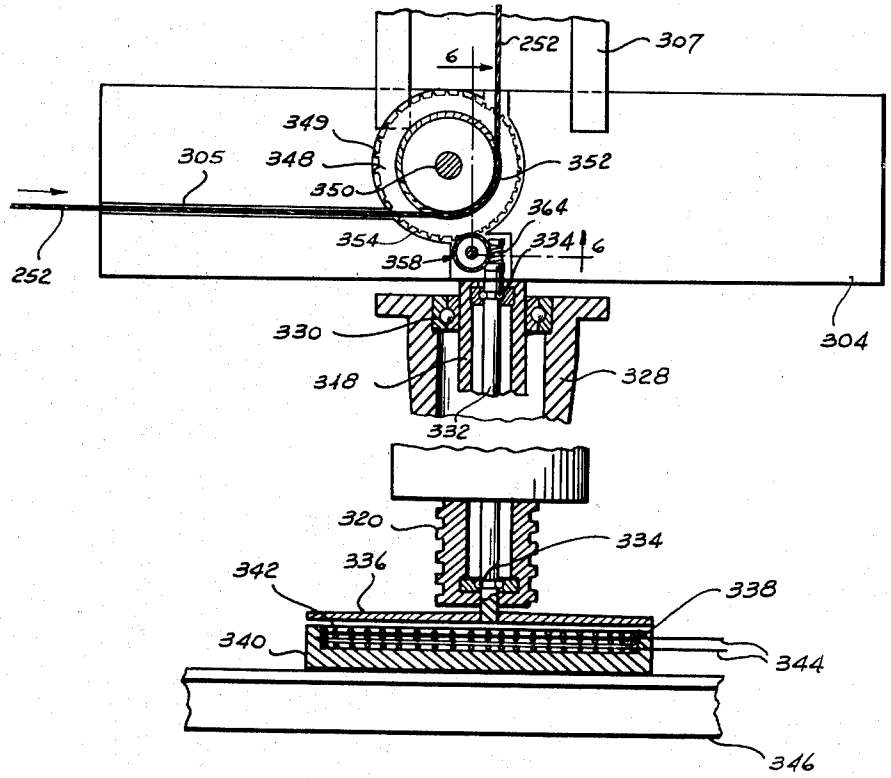

Fig 5

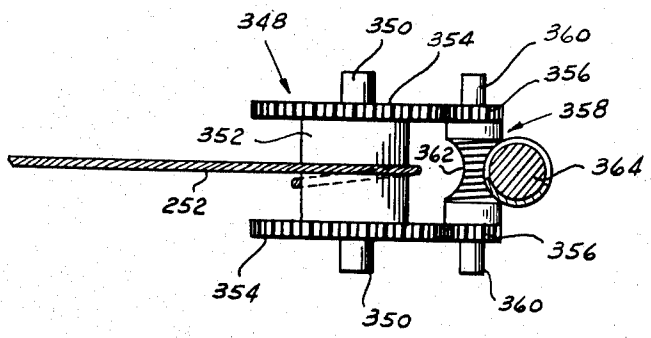

Fig 6

INVENTOR.
Alfred W. Vibber

TWISTING SPINDLE BALLOON CONTROL

Filed July 24, 1951 6 Sheets-Sheet 5

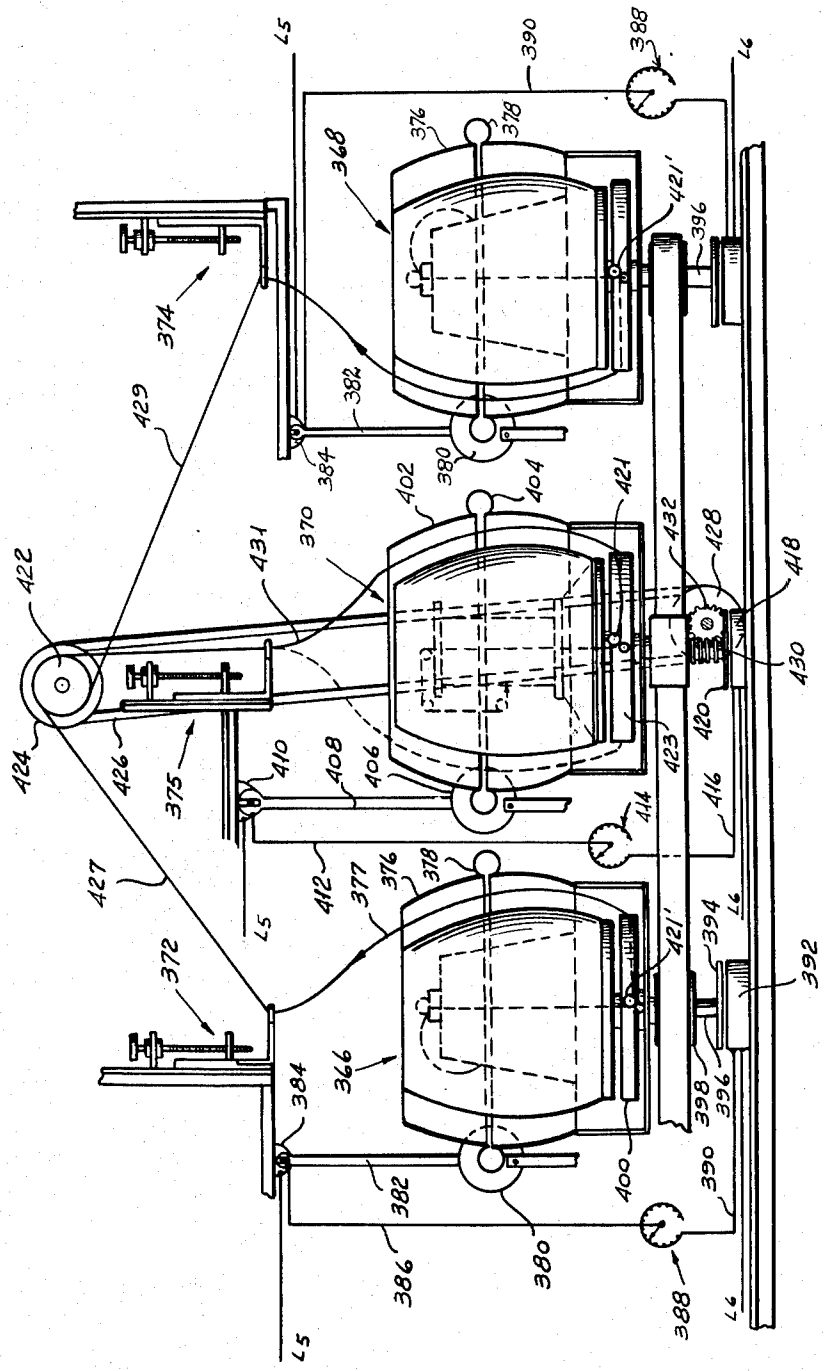

Fig. 7

INVENTOR.

Alfred W. Vibber

TWISTING SPINDLE BALLOON CONTROL

Filed July 24, 1951 6 Sheets-Sheet 6

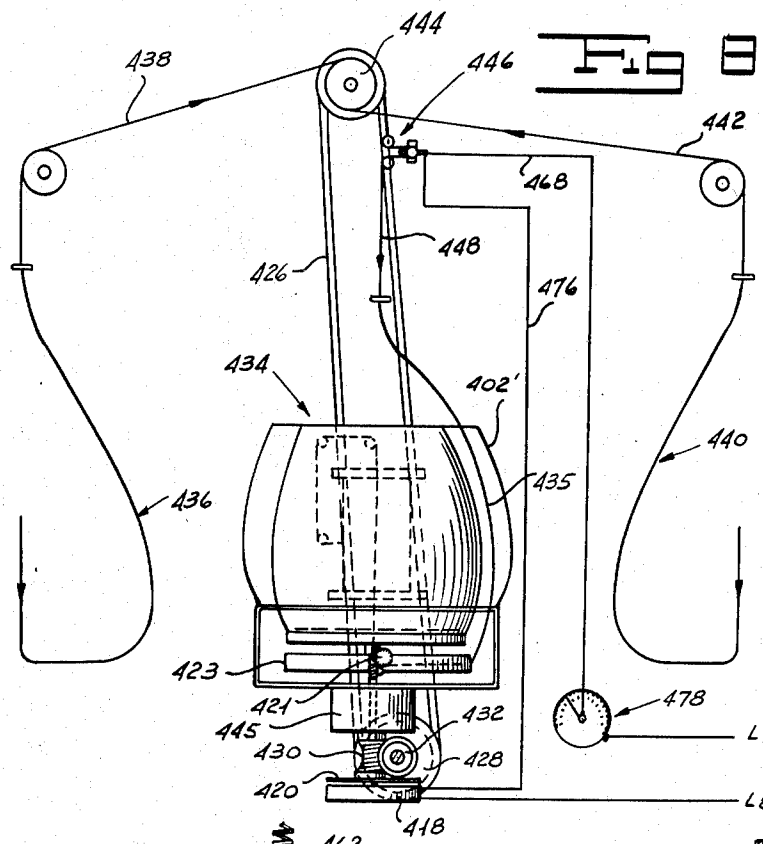

Fig 8

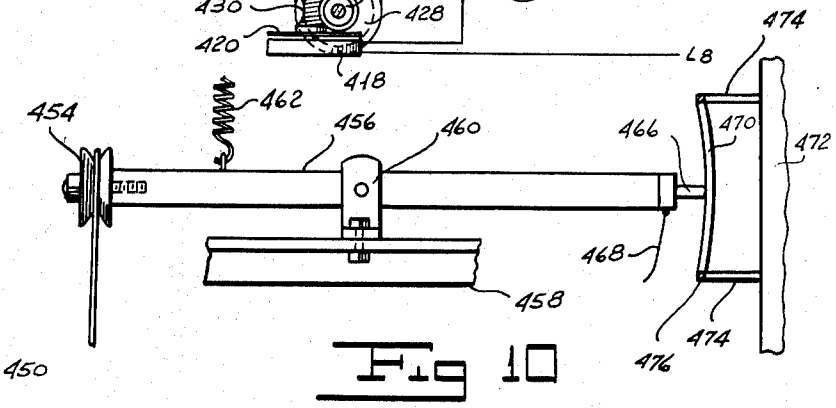

Fig 10

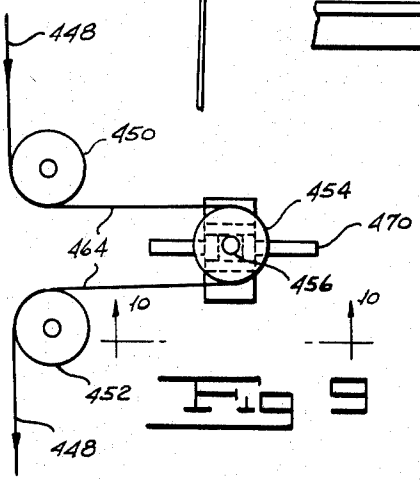

Fig 9

INVENTOR.

Alfred W. Vibber

United States Patent Office

2,729,932

Patented Jan. 10, 1956

1

2,729,932

TWISTING SPINDLE BALLOON CONTROL

Alfred W. Vibber, Ridgewood, N. J.

Application July 24, 1951, Serial No. 238,215

20 Claims. (Cl. 57—58.83)

This invention relates to an improved twisting spindle. Such spindle, in certain embodiments, may be employed as a singles twisting means. In other embodiments the spindle may be employed as a downtwister, which receives the elongated flexible material in a balloon created and maintained by the spindle. The invention also relates to a system for continuously twisting and taking up elongated flexible material, such material proceeding from a source of supply into the spindle of the invention employed as a downtwister. In a preferred embodiment of the system of the invention there is employed apparatus forming cord from a plurality of yarn supplies, preferably twisting spindles, while the material is continuously in motion, such system incorporating the improved spindle of the invention for doubling the separate strands fed thereto.

The twisting spindle of the invention is particularly of advantage in those systems wherein the means for feeding the flexible elongated material into the balloon of the twisting and cabling take-up spindle is driven at a substantially constant rate, as where the strand gathering pulley or other similar means in the aforesaid system is driven in synchronism with the singles twisting spindles and the doubling or cabling and twisting spindle. In such system, the apparatus of the invention governs the balloon in the cabling and take-up spindle, and thus the diameter and length of material in such balloon, by varying the speed of withdrawal of the material from the balloon.

This application is a continuation-in-part of application Serial No. 214,866, filed March 10, 1951, application No. 223,188, filed April 27, 1951, application No. 223,189, filed April 27, 1951, now abandoned, and of application Serial No. 225,209 filed May 8, 1951.

In each of the four previous applications, referred to above, of which this application is a continuation-in-part, there has been used an auxiliary capstan on the take-up or cabling and twisting spindle driven at constant speed and in synchronism with such spindle and also in synchronism with the singles twisting spindles, and there has also been used a gathering pulley which has been either idle or braked, depending on the relationship of the sum of the tensions in the singles strands with respect to the tension in the doubled strands. The object of such system in each of said applications has been to establish and maintain an over-all balance in the tensions existing throughout the system.

In the present application there are shown systems wherein the gathering means, such as a gathering pulley, is driven in synchronism with the singles supply spindles and with the cabling and twisting spindle of the system. Substantially no slip occurs at the gathering pulley or other gathering means, and thus the doubles balloon diameter, and/or the length of the material in such balloon, can be controlled by variation of the speed of withdrawal of the cord or other elongated flexible material from the doubles balloon in accordance with measurement of the doubles balloon diameter, measurement of the length of the material in such doubles balloon, or measurement of the difference in the speeds of entry and withdrawal of the material from the balloon, in the manner set out in each of the four above applications. In a further embodiment of the present invention, the speed of withdrawal of the material from the doubles balloon is governed by a tension-sensitive or tension detecting means engaging the doubled strands after their delivery by the gathering means and prior to their entry into the doubles balloon.

2

In the present application, for the purpose of illustration, there are first shown, and described two embodiments of the system wherein the speed of travel of the material into the balloon of the cabling and twisting spindle is maintained substantially constant, the variation of the speed of withdrawal of the material from such balloon being accomplished by the employment of mechanism providing for automatic variation of the speed of driving of the auxiliary capstan in response to the aforesaid measurements of the cabling and twisting spindle balloon.

By way of further illustration of the invention there is shown a system wherein a tension-sensitive means engages the doubled strands prior to their entry into the balloon of the take-up downtwister, such means governing the speed of withdrawal of the cord from the balloon of the take-up twisting spindle. Such spindle may be of any of the downtwister spindle types employed in the first described systems.

There is also shown, by way of illustration, an improved tension imposing means at the singles spindles, which is employed in the preferred embodiment of the system wherein the sum of the tensions in the singles balloons substantially equals the tension in the cabling and twisting spindle balloon.

The invention will be more readily understood by reference to the accompanying drawings forming a part of the specification, in which:

Fig. 1 is a somewhat diagrammatic, over-all view, in side elevation of a twisting and doubling apparatus for forming cord from yarns, such apparatus employing the preferred embodiment of the balloon control apparatus described as a means for controlling the diameter of the center, take-up, balloon;

Fig. 1A is an enlarged fragmentary view partially in section and partially in end elevation of a portion of the apparatus of Fig. 1;

Fig. 2 is a view in vertical axial section of the center, take-up, spindle, showing the balloon diameter measuring means and the variable speed auxiliary capstan at such center spindle;

Fig. 3 is an enlarged view in axial section through the variable speed auxiliary capstan and the means for driving it;

Fig. 4 is a somewhat diagrammatic, over-all view, in side elevation of a second embodiment of a twisting and doubling apparatus for forming cord from yarns;

Fig. 5 is an enlarged view, partially in side elevation and partially in vertical axial section through the bottom of the central, cabling and twisting, spindle in the combination shown in Fig. 4;

Fig. 6 is a somewhat simplified view in cross section through the apparatus of Fig. 5, the section being taken along the line 6—6 in Fig. 5;

Fig. 7 is a somewhat diagrammatic, over-all view, in side elevation of a third embodiment of a twisting and doubling apparatus for forming cord from yarns;

Fig. 8 is a somewhat schematic view in side elevation of a fourth embodiment of a twisting and doubling apparatus for forming cord from yarns in accordance with the invention;

Fig. 9 is an enlarged view in side elevation of the tension-sensitive means engaging the doubled strands below the gathering pulley and prior to their entry into the cabling and twisting spindle; and

Fig. 10 is an enlarged view in end elevation of such

tension-sensitive means, the view being taken from a point of view along the line 10—10 in Fig. 9.

In Figs. 1, 2, and 3 there is shown the first embodiment of the twisting apparatus of the invention. In the specific embodiment shown, such apparatus, which is designed for the making of cord such as the reinforcing cord for tires, incorporates two singles strand delivering spindles and a central cabling and twisting spindle, in accordance with the general combination shown in Uhlig Patent No. 2,487,837, November 15, 1949. In Fig. 1 the left-hand singles spindle, designated 2, and the right-hand singles spindle, designated 4, feed their strands 52 and 60, respectively, to a driven gathering pulley, from which they are fed in gathered, as yet untwisted-upon-each-other, condition to the central, cabling and twisting spindle 6. Preferably sufficient wraps of the threads 52 and 60 are taken upon the driven gathering pulley so that substantially no slippage between such threads and the pulley occurs. Under such conditions, the gathering pulley acts as a tension isolating means, whereby tension conditions in the singles spindles are isolated from tension conditions in the cabling and twisting spindle. Furthermore, under such conditions the gathered cords are withdrawn at a substantially constant speed from the singles spindles and are fed at a substantially constant speed into the cabling and twisting spindle. As above indicated, the invention here involved employs means whereby the balloon of the cabling and twisting spindle is controlled as to size or as to the length of material therein by means varying the speed of withdrawal of the material from the balloon, so that the balloon size is controlled.

As shown in Fig. 1 there is provided a horizontal machine frame part 8 on which are attached, spaced longitudinally thereof, the supports 10, 12, and 14, for spindles 2, 4, and 6, respectively. Also attached to such machine frame part, by means of the motor shaft bearing hanger member 18 is the motor 16 the shaft of which is provided with the driving pulley 20. Pulley 20 drives, through the medium of belt 32, in a conventional manner the pulleys 22, 24, and 26 for spindles 2, 4, and 6, respectively. The end of belt 32 remote from the motor passes over the idle guiding pulley 28 which is journalled, as shown, in bearing member 30, likewise attached to frame member 8.

The as yet untwisted yarn in each singles spindle is supported therein in the form of a package floatingly maintained against rotation, in a conventional manner. In the singles spindle 2 the yarn package is designated 34. The yarn 36, withdrawn from such package, proceeds upwardly and thence downwardly to the tension device 38, and then enters the yarn twisting guide 40 affixed on top of the main shaft 42 of the spindle 2. The non-rotatable floating package support, mounted on said shaft 42 of spindle 2, is designated 44. Beneath support 44 there is affixed on shaft 42 so as to rotate therewith the disc-shaped flyer member 46 which has a radial thread guiding passage therein, such passage connecting at its inner end with the axial passage (not shown) through shaft 42. When the flyer and shaft 42 are rotated, the yarn 36 is first twisted in the zone between device 38 and twist guide 40, and is given a second twist in the balloon 48. The material emerges from balloon 48 through the guiding eye 50, placed coaxially of the spindle 2, such two-for-one twisted thread, designated 52, being led to the driven gathering pulley 62.

The singles spindle 4 is in all respects similar to spindle 2 described above. The thread is delivered therefrom through the radial passage in flyer 54, then forming itself into the balloon 56, and being pulled upwardly through the guiding eye 58. The thread 60 produced by the spindle 4 proceeds upwardly to the driven gathering pulley 62, where it is combined with thread 52 into the doubled but as yet untwisted-upon-each-other threads designated 64.

The thus combined threads 64 proceed downwardly through the guiding eye 66 of the cabling and twisting spindle 6, below the eye being formed into the balloon 68. The driven gathering pulley 62 acts, in this embodiment, as a speed determining member for the strands being processed and thus as a twist governor. Pulley 62 is mounted on the driven horizontal shaft 70, such shaft having thereon the V belt receiving pulley 72. Entrained over pulley 72 is the driving V belt 74, which is driven in synchronism with the main upright shaft 76 of the spindle 6. Such driving is accomplished by provision of worm 78 on the bottom of shaft 76, the worm gear 80 keyed to horizontal shaft 82 which meshes with such worm, and the driving V belt receiving pulley 84 about which the belt 74 is entrained.

The bottom end of the balloon 68 at the cabling and twisting spindle 6 is withdrawn by the balloon creating and maintaining flyer 86 through the radial passage 88 therein. As shown in Fig. 2, passage 88 communicates at a curved juncture with the axial passage 90 in the main shaft 76 of spindle 6.

The spindle 6 is, in all major respects except for the provision of variable speed means for driving the auxiliary capstan and for the provision of means for detecting the diameter of the balloon 68, the same as that shown in Fig. 4 of the application of Bogdanffy et al., Serial No. 59,392, filed November 10, 1948, now Patent No. 2,654,210. As shown, the main shaft of spindle 6 is provided with a removable axial extension 92, such axial extension being hollow to conduct the twisted cord therethrough and being provided with a driving connection between its bottom end and the top of shaft 76. The two-for-one twisted cord proceeds upwardly through the bore in shaft 76, the axial passage in extension 92, and thence over the first fixed guide pulley 94 to the auxiliary capstan generally designated 96.

Such auxiliary capstan is provided with two steps, the bottom step 98 first receiving the twisted cord. The cord is passed one or more times around such first step, then is taken off over the second fixed guide pulley 100, and then is returned for one or more turns around the second or upper step 102 of the auxiliary capstan 96. The cord is then taken off the second step on the auxiliary capstan, travelling over the guide pulleys 104 and 106, in that order, from which it proceeds to the cord laying and guiding pulley 108 on the traverse device 110. Such traverse device is reciprocated vertically by means of the double worm 112 which is driven in synchronism with the driven bobbin 114. The material thus wound upon such bobbin is designated 116.

The spindle 6 is provided with a compensating magnetic clutch 118 for driving bobbin 114, such clutch being similar to that in the patent to Agresti No. 2,434,496, December 19, 1950. Such clutch has for its function the maintaining of a substantially constant pull upon the cord as it is wound upon the bobbin in spite of the constant variation of the radius of the circle upon which it is wound on the bobbin. Generally such clutch includes a central rotor member 120 keyed to shaft 76, and an outer rotor member 122, embracing the inner rotor part, such outer rotor being connected to the bobbin supporting member which is floatingly mounted on shaft 76. The outer rotor member is so arranged as to be deflectable by the bobbin and the material wound thereon, whereby the air gap between rotor parts is constantly decreased as the weight of the bobbin and the material wound thereon increases. As a result, substantially constant pull is maintained upon the cord as it is wound upon the bobbin in spite of the progressively increasing size of the circle of material on the bobbin.

The spindle 6 shown in Fig. 2 is provided with means for constantly measuring the diameter of, or the length of the material in, the balloon 68. In the embodiment shown such balloon diameter measuring means takes the form of that embodiment shown in my prior applica-

tions Serial Nos. 214,866 and 225,209 wherein the pressure of a column of air in immediate communication with the balloon is measured, such air pressure having a fixed empirical relationship to the diameter of the balloon.

Spindle **6** is provided with an outer guard member **124**, such guard member having, preferably at the position of greatest girth of the balloon, a toroidal manifold **126** the inner zone of which communicates through the slot **128** with the space within the guard **124**. The guard **124** is supported on member **149** attached to the fixed member **14** by the open wire mesh structure **130**, so that not much if any of the breeze from the flyer reaches the point at which the balloon breeze is measured. The spindle is further provided with the inner guard member **132**, the balloon rotating between the two guards **124** and **132**.

Manifold **126** communicates with the expansible chamber **134** the rear, fixed end of which is supported on the member **136**. The forward, movable, end of such expansible chamber is connected to the lower end of the first-class lever **138**, the upper end of which is pivoted to the bracket **139** affixed to the upper machine frame part **137**, as shown in Fig. 1A. The upper arm of lever **138** operates the carbon granule variable resistor member **140** in the manner evident in Fig. 1A. As the lever **138** swings counter-clockwise, as it is shown in Fig. 1A, in response to increase in diameter of balloon **68**, it allows the plunger **141** of resistor **140** to be thrust to the left by the light coil compression spring **143** acting between a collar on the plunger and the end of the housing of the resistor. Thereupon the resistance through means **140** rises. Reverse movement of lever **138**, upon decrease in diameter of the balloon **68**, results in a decrease in resistance through means **140**. Such variation in resistance is used to govern the variable speed drive for the auxiliary capstan **96**, whereby the speed of withdrawal of the material from balloon **68** is automatically responsive to the means for continuously measuring the diameter of the balloon, such speed increasing when balloon diameter increases and decreasing when balloon diameter decreases. Such function is accomplished as follows:

Lead L_1 is connected to one terminal of the resistor **140**. A wire **144** runs from the other terminal of such resistor, there being interposed in such wire the manually adjustable rheostat **145**. The wire **144** continues and makes connection with the brush **148** which is affixed, as shown in Fig. 2, in a brush holder in the fixed, horizontal, outer guard supporting, member **149** of the spindle **6**. Another wire **142** runs from the other side L_2 of the current supply. Wire **142** is connected, also as shown in Fig. 2, with the second brush **146** likewise affixed in a brush holder in member **149**. The brushes **146** and **148** make connection, respectively, with slip rings **150** and **152** which are mounted on the bottom of flyer **86** in insulated channel members, not shown. Wires, not shown, through the flyer member at positions other than that of the radial passage **88**, run from the slip rings **150** and **152** to the slip rings **154** and **156**, respectively, positioned on the top of the flyer member **86**, also in insulating channel members, not shown. In this instance the upwardly dished rotatable guard member **157** is made integral with flyer **86**, slip rings **154** and **156** being positioned on top of such guard member.

The slip rings **154** and **156** make electrical connection with brushes **158** and **160**, respectively, which are held in brush holders in the bottom member **161** of the cage which is floatingly mounted on the shaft **76**. From the brushes **158** and **160** there extend the two lead wires **162** and **164**, such wires proceeding upwardly as shown along one of the post members **165** of the spindle cage.

The auxiliary capstan **96** is driven generally as in the cited Bogdanffy et al. patent. In the embodiment here shown the drive is through the medium of the small V belt receiving pulley **166** affixed to the top of the spindle shaft extension member **92**, the large V belt receiving pulley **168** affixed to the shaft **174** on which the

auxiliary capstan is mounted, and the V belt **169** extending between such pulleys. In Fig. 2 the spindle is shown with such belt removed, such belt being indicated in Fig. 3. The member on top of spindle **6** supporting the auxiliary capstan is in this instance made of Z shape, such supporting member being designated **170** and having a main horizontal part **172** in which is journalled the shaft **174** carrying the auxiliary capstan **96**. The bearing between parts **172** and **174** is designated **176**. Shaft **174** is further rotatably journalled in the top member **178** of the spindle cage, the bearing between the shaft and such part being designated **180**.

The pulley **168** is of the split pulley type, the distance between pulley parts being adjustable over a small range whereby to adjust the effective diameter of the pulley and thus to provide a variable speed driving means. The bottom part of pulley **168** is designated **182**. Such bottom part is fixedly keyed by means **184** to the shaft **174**. The upper part of pulley **168**, designated **186**, has a spline connection **188** between it and shaft **174**, whereby such upper pulley part **186** may reciprocate along such shaft over a small range. The upper pulley part is provided, adjacent its axis, with a counterbore **190** in which there is positioned the coil compression spring **192**, the bottom end of such spring bearing on the lower pulley part **182**. Pulley part **182** has a portion **194** of the composite V groove, the other portion of such V groove being formed by surface **196** on pulley part **186**. The spring **192** normally tends to thrust the pulley parts away from each other, such parts being held together with a space **198** between them under normal operating conditions of the spindle.

The means for pulling the pulley parts together is made up of the wound field coil **202** positioned in the recess **200** in pulley part **182**. Current conducting leads **204** to such wound field coil are brought upwardly through the bore **206** in shaft **174** to the slip rings **212** mounted, as shown, in the upper insulating sleeve **208** which is held fixedly on shaft **174** by the set screw **210**. Brushes **214**, affixed in brush holders mounted in insulating members in the upstanding arm **216** of supporting member **170**, serve to make connection between such slip rings and the lead wires **162** and **164**, previously described.

The apparatus thus far described operates as follows. The effective resistance of carbon granule resistor **140** bears a fixed empirical relationship to the diameter of the balloon **68**. Accordingly, the voltage delivered through lead wires **162** and **164**, once the manually adjustable rheostat **145** has been set, will likewise bear a fixed empirical relationship to the size of the balloon. The degree to which the wound field coil **202** of the pulley **168** is energized will likewise bear an empirical relationship to the balloon size. Such degree of energization of the field coil determines the degree of approach of the two parts of the split pulley toward each other. Such degree of approach, or in other words the size of the air gap **198**, will determine the effective diameter of such pulley **168** and thus the speed of driving of the auxiliary capstan **96**. As the balloon diameter increases, the resistance through carbon granule resistor **140** increases and thus the voltage across wires **162** and **164** will decrease. This in turn will allow the parts **182** and **186** to move slightly further apart, thereby decreasing the effective diameter of pulley **168**, and thereby resulting in the increased speed of driving of auxiliary capstan **96**. Accordingly, as the balloon diameter increases, the capstan **96** is driven at an increased speed, thereby drawing material out of the balloon at an increased rate. It will be obvious that, upon the decrease of size of the balloon, a reverse operation will take place, whereby the effective diameter of pulley **168** will increase, thereby decreasing the speed of withdrawal of the material from the balloon. It will be obvious that the apparatus seeks a stable mid-point at which, once the rheostat **145** has

been set suitably the balloon will tend to remain at a predetermined desired medial diameter.

In the apparatus of Figs. 4, 5, and 6 there is shown the same general three-spindle combination previously described in Figs. 1 and 2. In this embodiment, however, the heights and diameters of the balloons of the singles spindles are so chosen, relative to such dimensions of the doubling and twisting spindle, that at medial diameters of such singles and doubles balloons the sum of the tensions in the singles balloons equals or substantially equals the tension in the doubles balloon. Accordingly, in this embodiment, there is little if any tendency of the strands to slip on the driven gathering pulley **244**, and so a comparatively small number of wraps of such strands is necessary upon such pulley as compared to the number of wraps necessary in the embodiment of Figs. 1, 2, and 3, wherein the tension in the doubles balloon will ordinarily substantially exceed the sum of the tensions in the singles balloons.

In Fig. 4 the singles spindle at the left is designated **218** and that at the right **220**. The flyer of spindle **218** is designated **222**, whereas that of spindle **220** is designated **224**. Since the spindles **218** and **220** are identical, detailed discussion of the singles spindles will be confined to spindle **218**. The package **226** of spindle **218** feeds yarn therefrom through the tension device **228** down through the twist guide **230** outwardly through the flyer **222** and upwardly into the balloon **232**. The flyer **222** is of the type shown in Figs. 18 and 20 of my prior application 214,866, such flyer incorporating at the outer end thereof a tension imposing device 223. The two-for-one twisted thread, designated **240**, proceeds upwardly from balloon **232** over the guiding pulley **288** journalled in frame part **264**, to the driven gathering pulley **244**. A similar thread **242** proceeds upwardly from spindle **220** through the balloon **234** over a similar guiding pulley to the driven gathering pulley **244**. An eye **236** is provided axially above spindle **218**, and a similar eye **238** is positioned axially above spindle **220**. Such eyes are automatically adjustable in a manner which will be described hereinafter.

The driven gathering pulley **244** is mounted on horizontal cross shaft **246**, such cross shaft having thereon the V belt receiving driving pulley **248** over which is entrained the V belt **250**. The V belt is driven through the medium of the worm **320** positioned on the bottom of the main shaft **318** of spindle **256**, the worm gear **322**, and the pulley **326** over which is entrained the bottom end of belt **250**, such pulley being mounted on the cross shaft **324** on which is mounted the worm gear **322**. The doubled, as yet untwisted-upon-each-other, singles strands **252** are led downwardly from the gathering pulley, which, as is evident, is driven in synchronism with the speed of driving of the center doubling and cabling spindle **256**. Such doubled strands proceed downwardly through the manually adjustable eye **254** into the balloon **302** of spindle **256**.

The means **258** for adjusting eye **236** of spindle **218**, and the means **260** for adjusting eye **238** of spindle **220** are identical. Such means, except for the mechanism for imposing torque upon the shaft **280** (in means **258**) opposing that of the eye **236** is identical with that shown for that purpose in Fig. 25 of my prior application Serial No. 225,209. Device **258** includes the parallel vertical worms **262**, such worms being journalled in the upper machine frame part **264** and the lower machine frame parts **266**. Each of such worms has a longitudinal groove **268** therein, such worms passing through bores in the large gears **272** which are rotatably supported in the platform **270**, which also carries the rotatable eye **236**. A gear **276** is provided on the outer portion of the eye **236**, there being provided, between gear **276** and the large gears **272**, the intermediate gears **274**. The worms **262** threadedly engage fixed nuts mounted in platform **270**. Each of the large gears **272** carries a radially inwardly projecting key member which engages the slot or groove **268** in worms **262**, the worms being freely slidable through the bores in gears **272**. It will be evident that upon the turning of worms **262** the platform **270** will be adjusted upwardly or downwardly depending upon the direction of rotation of the worms, intergearing between the worms occurring through the aforementioned gear train of which the gear on the eye is a part.

Torque opposing the torque imposed on eye **236** by its balloon **232** is applied to the thus described system by means of the bevel bear **278** mounted on top of one of the worms **262**, the bevel gear **282** meshing therewith mounted on the end of horizontal shaft **280**, and the torque motor **284**, which is of the spring variety, such spring being wound to selected degrees by the key **286**.

When such torque motor **284** is wound to the selected degree, it will impose upon the worms **262** a torque which is just sufficient to balance the opposing torque imposed thereon by the action between balloon **262** and the eye **236**. Accordingly the devices **258** and **260**, above described, maintain the heights of their respective balloons such that the tension in each of the threads **240** and **242** is at the desired medial value, whereby the sums of the tensions in such threads substantially equals or equals the tension in balloon **302** when such latter balloon is adjusted to its desired height.

The means for adjusting the height of balloon **302** takes the form of means for vertically positioning the eye **254**. Such means, generally designated **290**, consists of the vertical machine frame part **292**, which forms a guideway for the vertical slide member **294**. The position of member **294** is governed by the manually rotatable screw **298**, positioned as shown, in the machine frame part so as to be rotatable therein, the worm engaging the nut member **300** on the slide **294**. Turning of the worm **298** in the correct direction will effect the desired vertical adjustment of eye **254**.

In the embodiment shown in Fig. 4, the speed of withdrawal of the material **252** from the balloon **302** is governed manually. Material **252** proceeds downwardly through balloon **302**, being withdrawn through the radial passage **305** in flyer **304** of such spindle. The bobbin **306** of such spindle, mounted upon the enlarged upper shaft portion **307**, is driven, as in the case of the apparatus of Figs. 1, 2, and 3, through the compensating magnetic clutch generally designated **309**. In Fig. 4, the spindles **218**, **220**, and **256** are driven respectively by the engagement of belt **316** with pulleys **310**, **312**, and **314**. For simplicity the structure supporting such spindles in the machine frame has been omitted in this figure, as well as in Figs. 7 and 8.

The means whereby the speed of withdrawal of the material from the balloon **302** of spindle **256** may be varied will be better understood by consideration of Figs. 5 and 6. As there shown, the main driving and supporting shaft for spindle **256** is hollow, having an axial bore therethrough. Such main shaft is designated **318**. Shaft **318** is mounted in a supporting member **328** similar to member **14** in Fig. 2, such member **328** being received in a portion of the machine frame, not shown. Shaft **318** is, as shown, rotatably supported in supporting member **328** by bearings **330**. Supported within the bore in shaft **318** is the small axially located shaft **332**, such shaft being journalled in shaft **318** through the medium of the bearings **334**.

On the bottom end of the small shaft **332** there is positioned the inductor disc **336** made of electrically conducting metal such as copper, aluminum, and the like. A wound field coil **338**, positioned in shell **340**, is supported on frame part **346** so as to lie parallel with the outer broad face of disc **336** with a small air gap **342** between them. The wound field coil **338** is selectively energized to varying degrees, by means to be explained, through the lead wires **344**. The degree of attraction between inductor disc **336** and the wound field coil **338**, and thus the

force imposed upon shaft **332** retarding its rotation, may be varied by varying the degree of energization of coil **338**.

Journalled within flyer **304**, in the recess **349** therein, is the cord engaging and advancing roller member generally designated **348**. Member **348** is, as shown, so positioned that its axle **350** extends transverse to the axis of rotation of the flyer. The roller **348** is of such diameter and is so positioned that the longitudinal center of the inner side of its central cord engaging drum portion **352** lies tangent to the axis of the flyer, along which material **252** proceeds after leaving such roller. The cord **252**, proceeding inwardly through the radial passage **305** in flyer **304**, may be wrapped one or more times about such central portion **352** of the roller so as to have substantially non-slipping engagement therewith. As mentioned, the cord then leaves such portion **352** and travels upwardly through the bore in the enlarged portion **307** of the central shaft of the spindle, which in this instance is discontinuous, the flyer **304** being interposed between the portions **318** and **307**, both such parts **318** and **307** being fixedly connected to flyer **304**.

Roller **348** is provided with end flanges, the outer portions of such flanges having gears **354** thereon. Gears **354** mesh with the gears **356** positioned on the ends of the intermediate gear member **358** which is also journalled in a recess in the flyer on an axle **360**, such axle being parallel to axle **350**. Centrally of member **358** there is positioned the hour-glass worm gear **362** which meshes, as shown, with the small hour-glass worm gear **364** fixedly attached to the top of shaft **332**. Shaft **332** is positioned coaxially of the flyer. Gears **364** and **362** are made of such hand, and gears **364**, **362**, **356**, and **354**, and drum **352** are made of such relative size that, when the flyer **304** rotates with the disc **336**, and thus the shaft **332** and the worm **364**, locked from rotation, material **252** will be drawn in to the flyer at a speed at least slightly in excess of the speed required to maintain the balloon **302** at the desired medial diameter. Such driving of member **348** results, of course, by the rotation of members **348** and **358** as a unit with the flyer about the worm **364** and thus the driving of member **348** through the medium of the gears **364** and **362** and also the gears **354** and **356**.

During operation of the spindle, the wound field coil **338** is energized to a degree sufficient to retard the rotation of inductor disc **336** to a point at which the speed of rotation of shaft **332** and thus of worm **364** with respect to member **358** is such that the drum portion **352** of member **348** has a peripheral speed such that it withdraws material **252** at the requisite speed from its balloon. The energization of wound field coil **338** is under the control of the manually adjustable rheostat **365**, which is positioned outside the spindle, so as to be readily available to the operator. The embodiment of Figs. 4, 5, and 6 is of advantage, therefore, since it inherently balances the tensions in the singles and the doubles balloons, thereby minimizing slippage of the material at the gathering pulley and thereby insuring constant speed of infeed of the material into the doubles balloon. Under such conditions only infrequent adjustment of the speed of drawing in of the material into the spindle **256** through manipulation of rheostat **365** is necessary.

The material leaving the positive cord withdrawing means **348** rises, as explained, through the central axial bore in the main shaft of the spindle, thence proceeding, over guide pulleys, directly to the traverse mechanism **308** whereby it is laid on the bobbin **306**. The member **348** and its drive takes the place of the auxiliary capstan **96** in the embodiment of Figs. 1, 2, and 3, the compensating clutch **309** serving to supply the necessary torque to the bobbin to withdraw the material upwardly through the spindle and to wind it on the bobbin.

In the embodiment of Fig. 7 there is shown a three-spindle machine which has the balloon diameter of both the singles and doubles spindles automatically controlled, so that when the machine is once adjusted it is capable of operation continuously for long periods without attention other than to doff the filled bobbin and replace it by an empty one, and to replace empty supply packages.

In the embodiment of Fig. 7 the singles spindle at the left is designated **366** and that at the right is designated **368**. The center twisting and doubling spindle is designated **370**. The structure of the spindle **370**, insofar as it concerns the manner of withdrawing material from the balloon inwardly of the flyer and of the means for driving the bobbin and for laying the material on the bobbin, is the same as that previously shown and described in Figs. 4, 5, and 6. The spindle **370** differs from that previously described, however, in that it incorporates a means for automatically and continuously measuring the diameter of the doubles balloon and for controlling the speed of feeding the material from the doubles balloon in accordance with such measurement.

Spindle **370** is provided with an outer guard member **402**, such guard member being provided with the manifold **404** which is connected with the expansible chamber **406**. Expansible chamber **406** controls the positioning of second-class lever **408** which cooperates with the plunger of the carbon granule resistor **410** so as to decrease the resistance through such resistor when the bottom end of lever **408** travels in the direction into the paper in Fig. 7. The disposition of lever **408** and resistor **410** relative to each other is the same as that between parts **232'** and **334** in Fig. 8 of application Serial No. 214,866. One connection to such carbon granule resistor **410** is made from lead wire L_5. A wire **412** leads from the other terminal of such resistor to the manually operable rheostat **414** from whence the wire **416** leads to one side of the wound field **418**. The other side of such wound field is connected to the line L_6 of the source of current. An inductor disc **420**, similar to that previously described in connection with Figs. 4, 5, and 6, is positioned on a small central shaft in spindle **370** with an air gap between it and inductor **418**. As a result of such construction, the speed of cord withdrawing pulley **421** mounted in the flyer **423** of spindle **370** may be controlled through the degree of energization of inductor coil **418**. It will be apparent that with the suitable choice of component sizes and with the suitable adjustment of rheostat **414**, the balloon diameter measuring means, operating through carbon granule resistor **410**, will energize wound field **418** to a suitable controlled variable extent so that the cord withdrawing means **421** will draw in the cord from the balloon at a rate just fast enough, when correlated with the constant speed of feed-in of such cord by gathering pulley **422**, that the balloon is maintained constantly at its medial diameter.

As above indicated, each of the singles spindles **366** and **368** is likewise automatically controlled so that its diameter is maintained within narrow predetermined limits. In both such spindles substantially the same cord engaging means is employed at the center of the flyer, as in the apparatus of Figs. 4, 5, and 6, such cord engaging means in the singles spindles functioning as a selectively variable tensioning means. In each of spindles **366** and **368** the cord engaging roller corresponding to member **348** in Figs. 4, 5, and 6, is designated **421'**. Such roller **421'** is under the control of the small axial shaft **396**, to the bottom of which is affixed the inductor disc **394** which cooperates, with a small air gap between them, with the wound field of the inductor **392**. Means **392** is fed through the first current source L_6 on one side thereof and, on the other side, through the wire **390** in which is placed the manually adjustable rheostat **388**. Beyond such rheostat the wire continues at **386** to a terminal of the carbon granule resistor **384**, the other terminal of

such resistor being connected to the wire L_5 of the current source.

The diameter of balloon 377 is maintained within narrow limits as to diameter by means of balloon measuring apparatus similar to that shown at spindle 370. At spindle 366, and also at spindle 368, there is provided an outer guard member 376 which has at a point opposite the greatest girth of the balloon a manifold 378. Such manifold communicates with the air column stirred up by the balloon through the horizontal slot. The manifold feeds into the expansible chamber 380 which controls the positioning of lever 382 and thus the effective resistance of resistor 384 in the same manner that lever 408 of spindle 370 controls resistor 410. The two retarding forces operative upon the yarn as it is withdrawn from the package of the singles spindles are contributed by the magnetic ball tension device, shown at the top of the spindle, and the cord engaging device, including member 421′, at the center of the flyer 400. The magnetic ball tension device will be initially adjusted and during operation of the spindle its tensioning effect upon the yarn will remain constant. The secondary tensioning device, including member 421′, will, however, be under the control of the resistor member 384. As the diameter of balloon 377 increases, the resistance through resistor 384 will decrease, thereby additionally energizing means 392. As a result, disc 394 will be additionally retarded from rotation by means 392. Thus the sum of the tensions opposing the expansion of the balloon 377 is under the control of the singles balloon measuring device and, therefore, the balloon may be maintained of substantially constant diameter. Accordingly, when the same balloon control means is employed at spindle 368, the sum of the tensions in threads 427 and 429 may be held substantially constant.

In the last shown embodiment, depicted in Figs. 8, 9, and 10, the cabling and twisting spindle 434 is essentially the same in construction as spindle 370 in Fig. 7, with the exception that no balloon diameter measuring device is employed therewith. The same reference characters are employed to denote the parts of spindle 434 as are used in describing spindle 370. In this embodiment of the invention, the diameter of balloon 435 is maintained substantially constant by feeding the doubles strands 448 thereinto at a substantially constant speed by reason of their substantial non-slipping engagement with the driven gathering pulley 444, by withdrawing the material from the doubles balloons at a selectively variable rate, and by governing such rate of withdrawal by a tension sensitive means engaging the doubled strands at a point prior to their entry into the doubles balloon.

The singles balloons, diagrammatically depicted at 436 and 440, feed their threads, 438 and 442, respectively, to the driven gathering pulley 444. From such driven gathering pulley the gathered strands 448 enter the balloon 435, being drawn into the flyer 423 by the driven cord engaging roller 421. The speed of driving of roller 421, in this instance, is under the control of the tension-sensitive means 446, shown in Fig. 8 as engaging the run of doubled strands 448 above the eye of the spindle 434.

The character of means 446 will be more readily apparent from a consideration of Figs. 9 and 10. As shown in Fig. 9, the doubled strands 448 proceed downwardly and 90° around the first fixed guide pulley 450, thence around the movable tension detecting pulley 454, back into engagement with the second fixed guide pulley 452, and then resume their travel into the balloon. The runs of material 448 approaching and leaving pulley 454 are designated 464. The movable, tension detecting, pulley 454 is mounted, as shown in Fig. 10, on the outer end of the first-class lever 456. Such lever is journalled for oscillation in a horizontal plane (Fig. 8) between the ears of the U-shaped bracket 460 mounted on the frame part 458. Deflection of roller 454 in such direction as to shorten runs 464 is opposed by the spring 462, the bottom end of which is attached to the forward end of the lever and the upper end, not shown, is attached to a fixed machine frame part.

It will be apparent that increased tension in run 448 of the doubled strands will result in travel of roller 454 in a direction to the left in Fig. 9 and downward in Fig. 10. It has been found that, within the desirable range of balloon size, tension in the material 148 above the eye 435 for such balloon decreases as the balloon diameter in the material above the eye for the balloon increases and that the tension increases as the balloon diameter decreases. Accordingly, the tension-sensitive means 446 is so connected as to cause the means for controlling the speed of roller 421 to withdraw material from the balloon at a greater rate when the tension measured by means 446 decreases, and to withdraw material from the balloon at a less rate when the tension as measured by means 446 increases. The means for controlling the speed of roller 421 therefore operates to vary the speed of withdrawal of the material from the balloon in inverse proportion to the response of the tension-sensitive means.

The means for accomplishing this result take the form of a brush 466 mounted in an insulating holder on the rear end of lever 456, such brush holder being provided with a flexible lead wire 468. Brush 466 slidingly cooperates with a curved linear resistor member 470 mounted, as shown, on the machine frame part 472 through the medium of the insulating brackets 474. A lead wire 476 is attached to the bottom of resistor 470, as the device is shown in Fig. 10. As a result of such construction, upon a decrease in diameter of balloon 435 roller 454 is increasingly deflected and the effective resistance between wires 468 and 470 increases, thereby resulting in decreased energization of means 418, since the effective length of the resistance 470 is in series with means 418, being positioned in line L_7. Thus, there then results a lesser speed of driving of roller 421 and a smaller rate of feeding of the material out of the balloon. Accordingly, the balloon is then restored to its medial diameter. Should, however, the balloon increase unduly in diameter, there will be less tension in the balloon and thus the roller 454 will move to lengthen runs 464. Accordingly, less resistance will be inserted in the circuit feeding means 418 by resistance 470, the speed of feeding of roller 421 will be increased, and the material will be withdrawn from the balloon at a greater rate, thereby restoring the balloon to its medial diameter. For the purpose of allowing initial adjustments of the device to attain such medial diameter of the balloon, there is inserted in the lead wire 468 between the source L_7 and resistance 470 the manually adjustable rheostat 478.

Whereas for purposes of illustration I have shown and described various embodiments of the method of and apparatus for controlling balloons of twisting spindles and of multiple spindle combinations of apparatus incorporating such control of balloons, it is to be understood that apparatus and method of the invention are capable of considerable variation, the described embodiments are illustrative only, and that the invention is to be defined by the scope of the claims appended hereto.

I claim as new the following:

1. Apparatus for controlling the balloon of an elongated flexible material twisting spindle, said spindle having a balloon creating flyer, means for continuously feeding material into the balloon at an essentially constant rate, variable speed means for continuously withdrawing material from the balloon, and means for controlling the speed of the last named means, whereby the relation of the speeds of feeding the material into the balloon and of withdrawing it from the balloon may be varied to control the size of the balloon during operation of the spindle.

2. Apparatus for controlling the balloon of an elongated flexible material twisting spindle of the downtwister type which creates and receives material from a balloon in free

flight through the air comprising a flyer, means for continuously feeding material into the balloon at an essentially constant rate, means for continuously withdrawing material from the balloon and thence in through the flyer, means for detecting changes in the diameter of the balloon, and means responsive to the last named means operative upon the means for withdrawing material from the balloon to vary the speed at which the material is withdrawn from the balloon.

3. A spindle for twisting elongated flexible material, said spindle being of the type which creates and maintains a balloon of such material, and which effects one of the twists of the material in such balloon, said spindle having a driven balloon creating flyer, means for driving the flyer, a material engaging speed controlling roll journalled on said spindle, means for driving said roll, and means for varying the relationship between the speed of rotation of the roll and the speed of rotation of the flyer.

4. A twisting spindle for elongated flexible material, said spindle being of the type which creates and maintains thereat a balloon of the material in free flight through the air, said spindle having a driven balloon creating flyer, a material engaging roll journalled on the spindle for governing the speed of the material through the flyer, common drive means for the flyer and for the roll for causing the latter to revolve about its axis, and means for varying the speed of rotation of the roll with respect to the speed of rotation of the flyer.

5. A twisting spindle of the downtwister type for twisting elongated flexible material, which comprises a shaft, means mounting such shaft for rotation about its axis, a flyer mounted on the shaft for rotation therewith, the shaft having an axial passage therein and said flyer having a substantially radial passage connecting with the shaft passage, a bobbin support and a cord guide support mounted on said shaft, the cord guide support being floatingly mounted on the shaft, a cord feeding device carried by said guide support disposed adjacent the shaft and engaging the cord leaving the shaft to pull the cord through said passages in the flyer and shaft in that order, said cord feeding device having a drive connection from said spindle shaft, said drive connection being operable upon relative rotation between the spindle shaft and said guide support, and means for varying the speed ratio between the spindle shaft and the cord feeding device.

6. A twisting spindle for elongated flexible material, said spindle being of the type which creates and maintains thereat a balloon of the material in free flight through the air, said spindle having a driven balloon creating flyer, a roll journalled in the flyer for engaging substantially without slip material passing through the flyer and for governing the speed of travel of such material, common drive means for the flyer and the roll for causing the latter to revolve about its axis, and means for varying the speed of rotation of the roll with respect to the speed of rotation of the flyer.

7. A twisting spindle for elongated flexible material, said spindle being of the type which creates and maintains thereat a balloon of the material in free flight through the air, said spindle having a driven balloon creating flyer, a spindle shaft mounting said flyer, the flyer having a radial passage therein, the spindle shaft having an axial passage in one end thereof, such axial passage communicating with the radial passage in the flyer, a roll journalled in the flyer at the juncture of the passages in the spindle shaft and the flyer, such roll engaging substantially without slip material passing through the flyer and governing the speed of travel of such material, common drive means for the flyer and the roll to cause the latter to revolve about its own axis as well as about the axis of the spindle shaft as the flyer rotates, and means for varying the speed of rotation of the roll with respect to the speed of rotation of the flyer.

8. A system for doubling a plurality of strands into a cord comprising a plurality of strand supplies, a multiple-twist type of take-up balloon creating twister for doubling the strands and collecting the cord, means mounted on the take-up twister for drawing the cord through the balloon of the take-up twister, means for driving the last named means at a selectively variable speed, strand speed regulating means acting upon the strands as they pass between the supplies and the take-up twister, said last named means being driven in synchronism with the take-up twister and engaging the strands substantially without slippage, and means for controlling the speed of driving of the means for drawing the cord through the balloon of the take-up twister.

9. A system for doubling a plurality of strands into a cord comprising a plurality of strand supplies, a multiple-twist type of balloon creating take-up twister for doubling the strands and collecting the cord, means mounted on the take-up twister for drawing the cord through the balloon of the take-up twister, means for driving the last named means at a selectively variable speed, strand speed regulating means acting upon the strands as they pass between the supplies and the take-up twister, said last named means being driven in synchronism with the take-up twister and engaging the strands substantially without slippage, means for detecting changes in the diameter of the balloon at the take-up twister, and means connected with the last named means for controlling the speed of driving of the means for drawing the cord through the balloon of the take-up twister.

10. A system for doubling a plurality of strands into a cord comprising a plurality of twisting supply spindles, each of said supply spindles being of the type which creates and maintains a balloon thereat, a take-up balloon creating twister for doubling and twisting the strands and collecting the resulting cord, means mounted on the take-up twister for drawing the cord through the balloon of the take-up twister, means for driving the last named means, means at each of the supply spindles for detecting changes in the diameter of the respective balloon thereat, means responsive to the last named means for maintaining the respective balloon of substantially constant diameter, means for detecting changes in the diameter of the balloon at the take-up twister, and means responsive to the last named means for maintaining the balloon at the take-up twister of substantially constant diameter.

11. A twisting spindle for elongated flexible material, said spindle being of the type which creates and maintains thereat a balloon of the material in free flight through the air, said spindle having a balloon creating flyer, a material forwarding means mounted in the flyer for engaging material passing through the flyer and for governing the speed of travel of such material, means for driving the flyer, means for driving the material forwarding means, and means for varying the speed of driving of the material forwarding means with respect to the speed of rotation of the flyer.

12. A twisting spindle for elongated flexible material, said spindle being of the type which creates and maintains thereat a balloon of the material in free flight through the air, said spindle having a balloon creating flyer, a material forwarding means mounted in the flyer for engaging material passing through the flyer and for governing the speed of travel of such material, means for driving the flyer, a shaft coaxial of the flyer, a drive connection between the shaft and the material forwarding means, and means to vary the speed of rotation of the shaft relative to the flyer, whereby to vary the speed of driving of the material forwarding means.

13. A twisting spindle for elongated flexible material, said spindle being of the type which creates and maintains thereat a balloon of the material in free flight through the air, said spindle having a balloon creating flyer, a material forwarding means mounted in the flyer for engaging material passing through the flyer and for governing the speed of travel of such material, means for driving the flyer, a shaft coaxial of the flyer, a worm on the shaft,

a worm gear drivingly connected to the material forwarding means and meshing with the worm, and means to vary the speed of rotation of the shaft relative to the flyer, whereby to vary the speed of driving of the material forwarding means.

14. A spindle for processing elongated flexible material, said spindle being of the type which creates and maintains thereat a balloon of the material in free flight through the air, said spindle having a balloon creating flyer, a material forwarding means mounted on the flyer for engaging material passing through the flyer and for governing the speed of travel of such material, means for driving the flyer, and means for driving the material forwarding means.

15. A spindle for processing elongated flexible material, said spindle being of the type which creates and maintains thereat a balloon of the material in free flight through the air, said spindle having a balloon creating flyer, a material forwarding means mounted on the flyer for engaging material passing through the flyer and for governing the speed of travel of such material, means for driving the flyer, and means for driving the material forwarding means from the flyer.

16. Apparatus for handling elongated flexible material comprising a first shaft, a loop rotating second shaft mounted coaxial of the first shaft for independent rotation with respect thereto, means for rotating the second shaft, a driven material feeding means mounted on the second shaft for rotation therewith about the axis of the second shaft, and means drivingly connecting the first shaft to the feeding means whereby the material feeding means is driven by the rotation of the second shaft relative to the first shaft.

17. Apparatus for handling elongated flexible material comprising a first shaft, a loop rotating second shaft mounted coaxial of the first shaft for independent rotation with respect thereto, means for rotating the second shaft, a driven material feeding means mounted on the second shaft for rotation therewith about the axis of the second shaft, and gear means drivingly connecting the first shaft to the feeding means whereby the material feeding means is driven by the rotation of the second shaft relative to the first shaft.

18. Apparatus for handling elongated flexible material comprising a first shaft, a balloon creating second shaft mounted coaxial of the first shaft for independent rotation with respect thereto, means for rotating the second shaft, a driven material feeding means mounted on the second shaft for rotation therewith about the axis of the second shaft, and gear means drivingly connecting the first shaft to the feeding means whereby the material feeding means is driven by the rotation of the second shaft relative to the first shaft, said last named means comprising a worm on the first shaft and a worm gear on the second shaft meshing therewith, said worm gear being in the train of drive to the feeding means.

19. A twisting spindle comprising a first shaft, a balloon creating second shaft mounted coaxial of the first shaft for independent rotation with respect thereto, means for rotating the second shaft; a driven material feeding means mounted on the second shaft for rotation therewith about the axis of the second shaft, a worm on the end of the first shaft, a worm gear on the second shaft meshing therewith, said worm gear being in the train of the drive to the feeding means, a generally radial material conducting passage in the second shaft outwardly of the material feeding means, the first shaft and the worm on the first shaft being so positioned relative to the second shaft as to leave unimpeded a zone of the second shaft at the axis thereof and beyond the first shaft and worm, whereby material may be fed from the feeding means on the second shaft to the axis of the second shaft.

20. A spindle for processing elongated flexible material, said spindle being of the type which creates and maintains thereat a balloon of the material in free flight through the air, said spindle having a balloon creating flyer, a material forwarding means mounted on the flyer for engaging material passing through the flyer and for governing the speed of travel of such material, the last named means being mounted on the flyer eccentric of the axis of the latter, means for driving the flyer, and means for driving the material forwarding means, said last named means comprising a shaft mounted on the axis of the flyer, means controlling the speed of rotation of the shaft to cause its speed to differ markedly at least momentarily from the speed of rotation of the flyer, and means drivingly connecting the shaft and the material feeding means so that rotation of the flyer with respect to the shaft causes the driving of the material feeding means.

References Cited in the file of this patent

UNITED STATES PATENTS

Re. 23,509	Whlig	May 27, 1952
2,487,838	Whlig	Nov. 15, 1949
2,550,136	Clarkson	Apr. 24, 1951
2,586,037	Heffelfinger	Feb. 19, 1952
2,586,038	Heffelfinger	Feb. 19, 1952
2,586,123	Truitt	Feb. 19, 1952
2,635,413	Truitt	Feb. 21, 1953