United States Patent

[11] **3,632,924**

[72] Inventor **Stephen James Harper**
Coventry, England

[21] Appl. No. **45,197**
[22] Filed **June 10, 1970**
[45] Patented **Jan. 4, 1972**
[73] Assignee **Rootes Motors Limited**
London, England
[32] Priority **June 17, 1969**
[33] **Great Britain**
[31] **30,679/69**

[54] **PRESSURE DIFFERENCE RESPONSIVE ELECTRIC SWITCHES WITH RELEASABLE DETENTS AND DIRECTION OF RESPONSE INDICATORS**
9 Claims, 5 Drawing Figs.

[52] **U.S. Cl.** ..... **200/82 D,** 116/124 L, 200/153 LA, 340/52 C
[51] **Int. Cl.** **H01h 35/38**
[50] **Field of Search** ..... 340/52 C, 60; 200/153 LA, 82 D, 169 PB, 83 A, 166 SD; 116/124 L, 124 D, 114 AE

[56] **References Cited**
UNITED STATES PATENTS

3,228,194	1/1966	Blair	200/82 D UX
3,382,333	5/1968	Ihnaick, Jr.	200/82 D
3,475,573	10/1969	Maltais et al.	200/82 D
3,371,172	2/1968	McClure	200/169 PB X
1,942,096	1/1934	Hallerberg	200/82 D UX

Primary Examiner—Robert K. Schaefer
Assistant Examiner—Robert A. Vanderhye
Attorney—Mawhinney & Mawhinney

ABSTRACT: A pressure difference responsive device is drivably connected to a movable contact on an electric switch to close the switch when a pressure difference occurs. The switch is connected in an electric circuit including a warning device and the switch is held closed by releasable detents when the pressure difference has been removed.

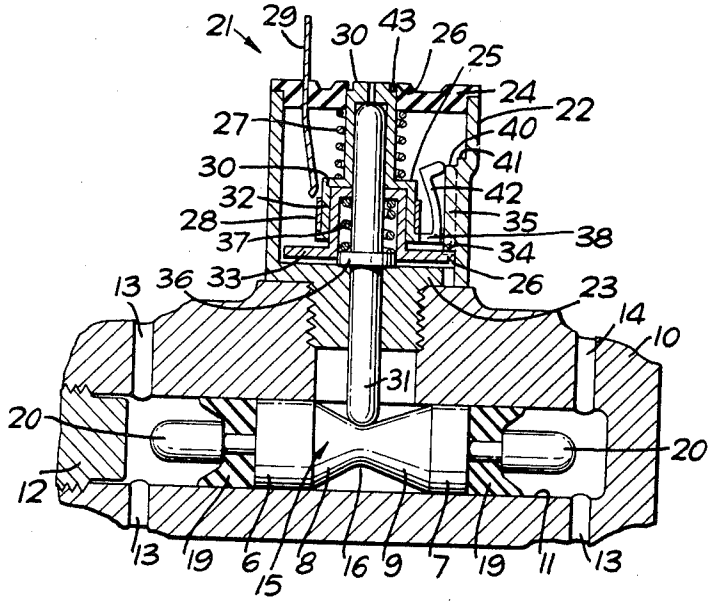

Fig. 1.

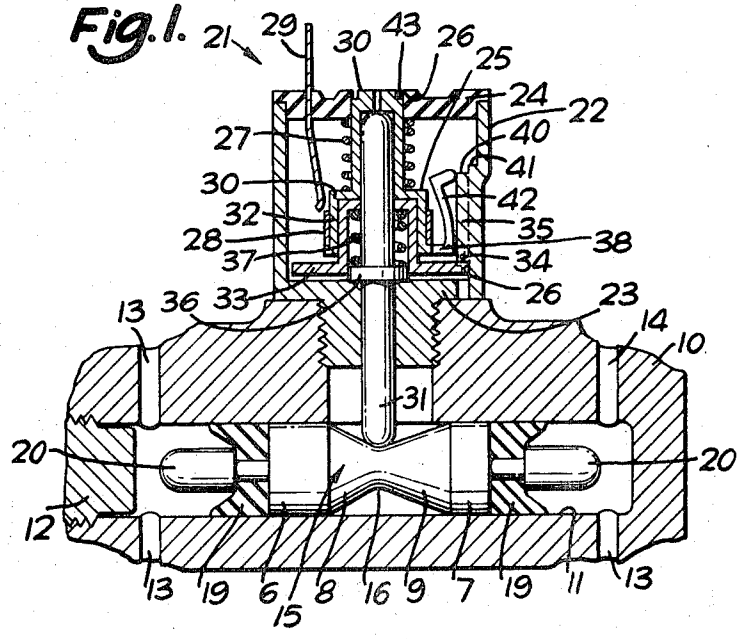

Fig. 2.

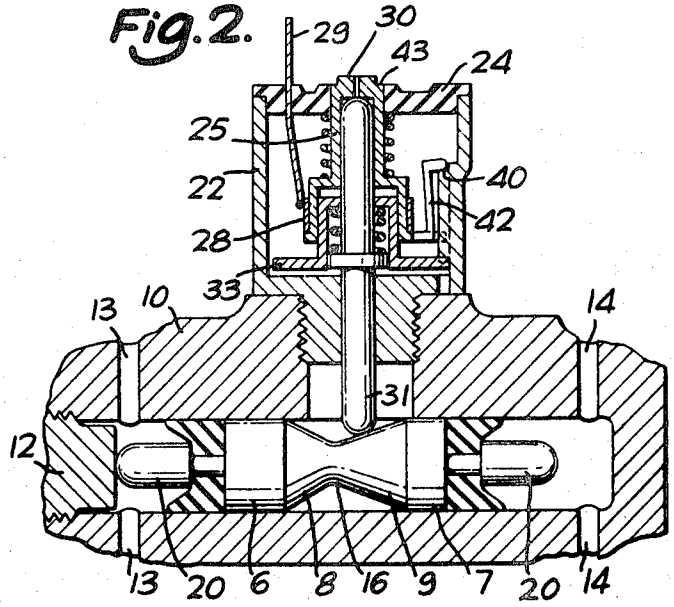

INVENTOR
STEPHEN JAMES HARPER
BY mawhinney & mawhinney
ATTYS.

Fig. 3.

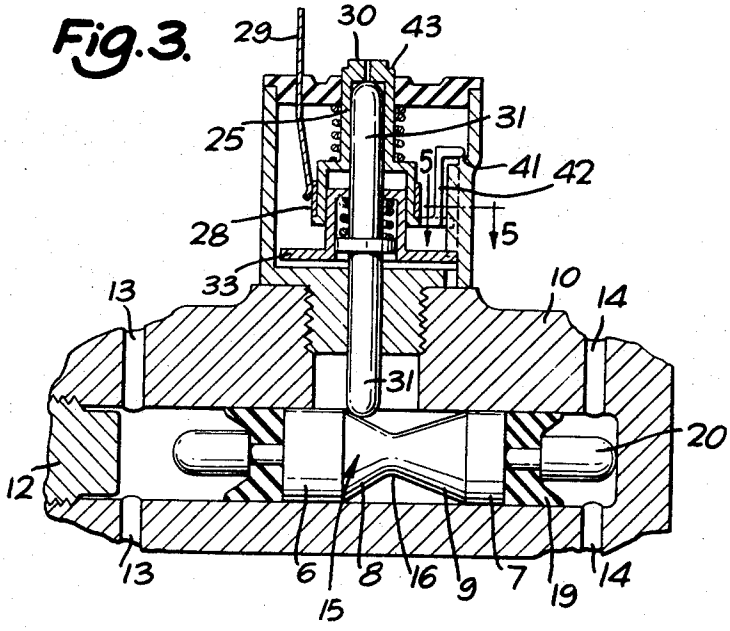

Fig. 4.

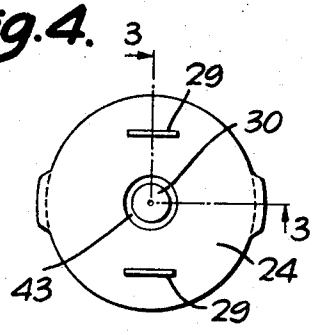

Fig. 5.

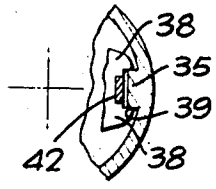

INVENTOR
STEPHEN JAMES HARPER
BY Mawhinney & Mawhinney
ATTYS.

PRESSURE DIFFERENCE RESPONSIVE ELECTRIC SWITCHES WITH RELEASABLE DETENTS AND DIRECTION OF RESPONSE INDICATORS

This invention relates to pressure difference responsive electric switches.

The invention provides a pressure difference responsive electric switch comprising an electric switch, a device responsive to a difference in fluid pressure between two fluid pressure sources to close the switch and releasable means for holding the switch closed after the fluid pressure difference has been removed.

The electric switch may comprise a housing having fixed and movable contacts, the movable contact being mounted on a carrier and the releasable holding means being arranged between the carrier and the housing for holding the carrier in the switch closed position.

The releasable holding means may comprise at least one detent mounted on the carrier and an abutment on the housing for engagement by the detent in the switch closed position to hold the carrier in the closed position.

The housing of the electric switch may have an aperture and an indicator member movable with the carrier projects through the aperture so as to be visible externally of the switch and the pressure difference responsive device is arranged to move the carrier by different amounts according to which of the sources is at the lower pressure.

The indicator member may be moved through the aperture outwardly of the housing by movement of the carrier towards the switch closed position.

The end of the part of the indicator member which projects through aperture may be flush with the outer surface of the housing when there is no difference in pressure between the two sources and the member may have a shoulder adjacent said end which is flush with the outer surface of the housing when one source of pressure is lower than the other and which shoulder is displaced outwardly of the outer surface of the housing when said one source of pressure is higher than the other.

The pressure difference responsive device may comprise a cylinder having openings at the opposite ends thereof for connection to the two sources of fluid pressure, a double-acting piston assembly in the cylinder, which assembly has two pistons connected together by a cam member which is engaged by a plunger extending radially into the cylinder, the plunger being in driving engagement with the carrier of the electric switch and the cam member being shaped to displace the plunger by differing amounts for equivalent movements of the piston assembly according to which end of the piston assembly is subjected to the lower pressure.

The cam member of the piston assembly may comprise two truncated cones arranged end to end with their minor bases together, one of which cones is shorter and is more steeply tapered than the other, and the plunger is spring-urged towards the cam member so that after the pressures at the ends of the cylinder have been equalized the plunger displaces the piston assembly until it engages in the waist formed by the smaller ends of the two cones and means are provided for limiting movement of the piston assembly to equal movements on either side of the intermediate position so that the plunger is displaced by differing amounts when a pressure difference between the cylinder ends occurs according to which end is at the lower pressure.

The invention also provides a vehicle-braking system comprising two fluid pressure-producing devices, a number of fluid pressure operated braking devices, two fluid lines connecting the pressure-producing devices to the braking devices, a pressure difference responsive electric switch according to any of the arrangements referred to above in which the pressure difference responsive device is connected to the two fluid lines and the electric switch of which is connected in an electric circuit including a warning device.

The warning device may be an electric light.

A specific example of an electric switch operated by a pressure difference responsive device according to the invention will now be described with reference to the accompanying drawings in which:

FIG. 1 is a section through pressure difference responsive device and the switch in the open position, the switch being sectioned on the line 1—1 of FIG. 4;

FIG. 2 shows part of the section shown in FIG. 1 with the switch in a first closed position;

FIG. 3 shows part of the section shown in FIG. 1 with the switch in a second closed position;

FIG. 4 is a plan view of the switch; and

FIG. 5 is a section on the line 5—5 of FIG. 3.

The pressure responsive electric switch comprises a generally cylindrical body **10** having a bore **11** which is closed at one end of the body by a wall integral with the body and is closed at the other end by a plug **12**. Ports **13** are provided in the cylindrical body **10** adjacent said one end for connection to a fluid line from one master cylinder of a fluid pressure operated vehicle-braking system and similar ports **14** are provided in the body adjacent the other end for connection in a fluid line from another master cylinder. A double-acting piston assembly **15** has two pistons **6, 7** secured together by a cam member comprising two end-to-end truncated cones **8, 9** arranged with their minor bases together to form a waist indicated at **16**. The cone **8** is shorter and tapers more steeply than the cone **9** for a purpose described later. Liquid seals **19** are provided at the remote ends of the piston assembly **15** and stop members **20** project from the remote ends of the piston assembly to limit movement of the assembly in the bore.

An electric switch indicated generally by the reference numeral **21** has a housing comprising a sidewall **22**, a base **23** and a top **24**. The switch is secured to the cylindrical body **10** by a screw-threaded spigot **25** on the base which engages in a radial bore formed midway along the cylindrical body.

The housing of the switch contains a stepped sleeve **25** the smaller diameter end of which engages in a bore **26** in the top **24** of the housing. A compression spring **27** acts between the top **24** and the step of the sleeve to urge the sleeve downwardly towards the base of the switch. A contact ring **28** is fitted around the larger diameter part of the sleeve and is engageable with two contacts **29** which extend into the switch housing through the cap **24** at diametrically spaced locations. The contact ring **28** engages the contacts **29** when the sleeve is raised to either of two upper positions as described later. The two contacts are connected in an electric circuit which includes a facia mounted warning light in the vehicle so that when the circuit is completed by engagement of the contact ring with the two contacts the warning light is illuminated.

The smaller diameter end of the sleeve is closed by an end wall **30** and is engaged by an end of a plunger **31** for raising the sleeve. The plunger extends through a bore in the spigot **25** and the other end of the plunger engages the cam member of the double-acting piston assembly in the cylindrical body **10**.

When fluid pressure on the opposite ends of the piston assembly **15** is equal the assembly is located in a central position in the bore **11** and the plunger **31** engages the neck **16** of the cam member. When a difference in fluid pressure acting on the opposite ends of the assembly occurs the piston assembly is moved along the bore until one of the steps **20** engages an end of the cylindrical body and engagement of the plunger by one or other of the cones **8, 9** causes the plunger to be driven upwardly thereby raising the sleeve **25**. Since the truncated cone **8** tapers at a steeper angle than the cone **9** the plunger **31** will raise the sleeve **25** to a higher position when the piston assembly moves from left to right from its central position than when the piston assembly moves from right to left.

A cap **32** is fitted in the larger diameter part of the stepped sleeve and encircles the plunger **31**. The cap has an outwardly extending flange **33** at its lower end which engages under two downwardly facing abutment faces **34** (only one of which can be seen) formed at the lower ends of two diametrically spaced vertical ridges **35** on the sidewall of the housing to hold the cap against upward movement.

The plunger 31 has an integral flange 36 at an intermediate position in its length which is engageable with the upper face of the base 23 of the switch housing to limit downward movement of the plunger. A compression spring 37 acts between the flange and the underside of the top of the cap 32 to urge the plunger downwardly until the flange 36 engages the base 23 of the housing as shown in FIG. 1. When a difference in fluid pressure acting on the ends of the piston assembly 15 has caused the piston assembly to be displaced to one or the other side of its central position so that the plunger engages either the truncated cone 8 or the cone 9 and the difference in fluid pressure has been removed, the plunger 31 is moved downwardly under the action of the spring 37 to return the piston assembly to its central position when the plunger engages the waist 16.

The stepped sleeve has an outwardly extending flange 38 at its lower end which has two diametrically spaced slots 39 cut in its periphery (one of which can be seen in FIG. 5) to receive the vertical ridges 35 on the housing. Two vertically spaced upwardly facing abutment faces 40, 41 are formed at the upper ends of each of the two ridges. Two resilient detents 42 (only one of which is shown) are mounted on the flange 38 adjacent the two slots 39 respectively for engaging the abutment faces 40 to hold the sleeve in the first upper position and for engaging the abutment faces 41 to hold the sleeve in the second upper position.

The upper end of the sleeve is flush with the upper surface of the top 24 of the housing when the sleeve is in its lower position. An upwardly facing shoulder 43 is formed adjacent the upper end of the sleeve and is flush with the upper surface of the top when the sleeve is in its first upper position as shown in FIG. 2. The shoulder on the end of the sleeve is displaced outwardly of the upper surface of the top of the housing when the sleeve is in its second upper position as shown in FIG. 3.

Thus when fluid pressure on the left hand of the piston assembly 15 falls due to a failure in the part of the braking system connected to the ports 13 the piston assembly is moved to the left due to the position shown in FIG. 2 under the influence of the pressure difference between the ends of the piston assembly. The plunger 31 is driven outwardly by the truncated cone 9 and the plunger lifts the sleeve 31 to engage the contact ring 28 with the two contacts 29 and thereby illuminate the warning light. The upper end of the sleeve is then displaced outwardly of the top of the switch housing giving a further visual indication that a fault has occurred and the shoulder at the upper end of the sleeve is flush with the upper surface of the cab indicating that the loss of pressure has occurred in the part of the braking system connected to the left-hand end of the cylinder body 10. The detents 42 engage the lower faces 40 to hold the sleeve 25 in its upper position so that when the vehicle brakes are released and the piston assembly 15 returns to its central position under the action of the spring-urged plunger 31 the sleeve 25 remains in its upper position continuing to indicate that a fault in part of the braking system has occurred. When the fault has been repaired the projecting upper end of the sleeve is pushed down manually until it is flush with the upper end of the sleeve thereby releasing the detents 42 from the abutment faces 40 and disengaging the contact ring 28 from the two contacts 29.

If the fall in fluid pressure occurs in the part of the braking system connected to the right-hand end of the cylinder 10 the piston assembly 15 moves from left to right to the position shown in FIG. 3 and the plunger 31 is displaced outwardly by a greater amount so that the shoulder adjacent the upper end of the sleeve 25 is raised above the upper surface of the top of the switch housing. It will thus be appreciated that a fault has occurred in the part of the braking system connected to the right-hand end of the cylinder. The contact ring 28 engages the two contacts 29 so that the facia light is illuminated and the detents 42 engage the upper faces 41 on the sidewall of the housing to hold the sleeve in the displaced position until the fault has been rectified.

It will be appreciated that many modifications may be made to the above-described embodiment without departing from the scope of the invention. For example the shoulder adjacent the end of the sleeve 25 may be covered differently from the rest of the end of the sleeve so that visual indication of which of the upper positions the sleeve has reached is easier.

I claim:

1. A pressure difference responsive electric switch comprising; an electric switch having a housing containing an insulated movable carrier, a first contact fixed in the housing, a second contact mounted on the carrier, a releasable detent on the carrier to hold the carrier in a position in which the contacts are engaged, and a plunger engaging the carrier and projecting from the housing for displacing the carrier into said position in which the contacts are engaged by movement of the housing, spring means for biasing the plunger outwardly of the housing, a cam engaging the projecting part of the plunger for displacing the plunger inwardly of the housing, a device responsive to a fluid pressure difference for moving the cam to displace the plunger inwardly of the housing and means to limit movement of said device to maintain the cam in engagement with the plunger so that when the difference in fluid pressure is removed the plunger under the action of the spring means returns the pressure responsive device to its original position.

2. A pressure difference responsive electric switch comprising a housing having fixed and movable contacts, the movable contact being mounted on a carrier, a releasable holding means for holding the carrier when the contacts are engaged, a device responsive to a fluid pressure difference between two fluid pressure sources for moving the carrier by differing amounts to close the contacts according to which of the sources is at the lower pressure, an indicator member mounted on the carrier and projecting through an aperture in the housing so as to be visible externally of the housing to indicate, when the device responds to a pressure difference between the sources, which source is at the lower pressure.

3. A pressure difference responsive electric switch as claimed in claim 2 wherein the releasable holding means comprise at least one detent mounted on the carrier and an abutment on the housing for engagement by the detent in the switch closed position to hold the carrier in the closed position.

4. A pressure difference responsive electric switch as claimed in claim 2 wherein the indicator member is moved through the aperture outwardly of the housing by movement of the carrier towards the switch closed position.

5. A pressure difference responsive electric switch as claimed in claim 4 wherein the end of the part of the indicator member which projects through aperture is flush with the outer surface of the housing when there is no difference in pressure between the two sources and the member has a shoulder adjacent said end which is flush with the outer surface of the housing when one source of pressure is lower than the other and which shoulder is displaced outwardly of the outer surface of the housing when said one source of pressure is higher than the other.

6. A pressure difference responsive electric switch as claimed in claim 2 wherein the pressure difference responsive device comprises a cylinder having openings at the opposite ends thereof for connection to the two sources of fluid pressure a double-acting piston assembly in the cylinder, which assembly has two pistons connected together by a cam member which is engaged by a plunger extending radially into the cylinder, the plunger being in driving engagement with the carrier of the electric switch and the cam member being shaped to displace the plunger by differing amounts for equivalent movements of the piston assembly according to which end of the piston assembly is subjected to the lower pressure.

7. A pressure difference responsive electric switch as claimed in claim 6 wherein the cam member of the piston assembly comprises two truncated cones arranged end to end

with their minor bases together, one of which cones is shorter and is more steeply tapered than the other and the plunger is spring-urged towards the cam member so that after the pressures at the ends of the cylinder have been equalized the plunger displaces the piston assembly until it engages in the waist formed by the smaller ends of the two cones and means are provided for limiting movement of the piston assembly to equal movements on either side of the intermediate position so that the plunger is displaced by differing amounts when a pressure difference between the cylinder ends occurs according to which end is at the lower pressure.

8. A vehicle-braking system comprising two fluid pressure-producing devices, a number of fluid pressure operated braking devices, two fluid lines connecting the pressure-producing devices to the braking devices, a pressure difference responsive electric switch as claimed in claim 2 the pressure difference responsive device of which is connected to the two fluid lines and the electric switch, of which is connected in an electric circuit including a warning device.

9. A vehicle-braking system as claimed in claim 8 wherein the warning device is an electric light.

* * * * *