Aug. 5, 1930. D. S. BAKER ET AL 1,772,024

APPARATUS FOR HANDLING MATERIALS

Filed March 24, 1927 7 Sheets-Sheet 1

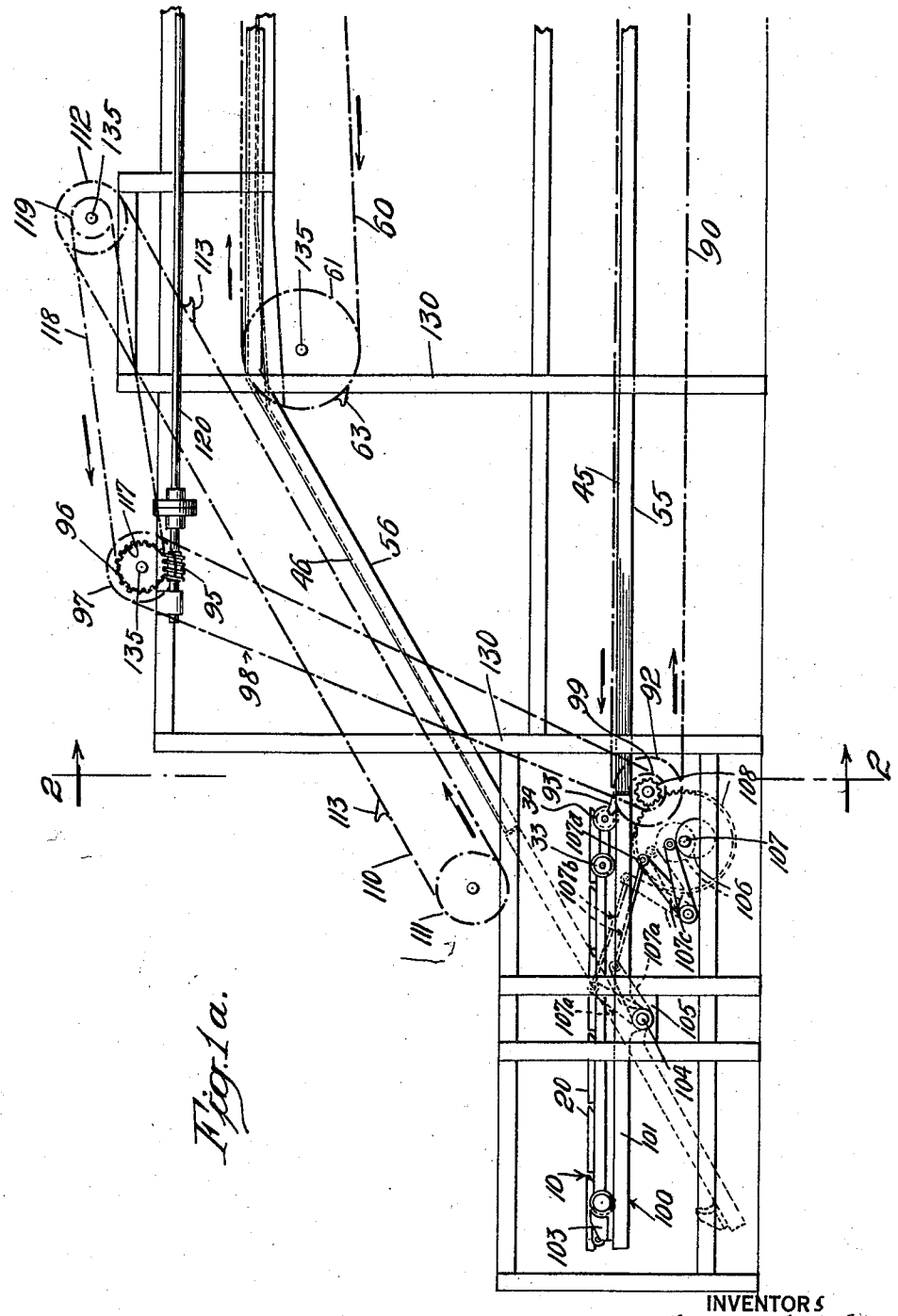

Fig. 1a.

INVENTORS
David S. Baker and
Bjornulf Johnsen
by Robert W. Byerly
their ATTORNEY

Aug. 5, 1930. D. S. BAKER ET AL 1,772,024

APPARATUS FOR HANDLING MATERIALS

Filed March 24, 1927 7 Sheets-Sheet 2

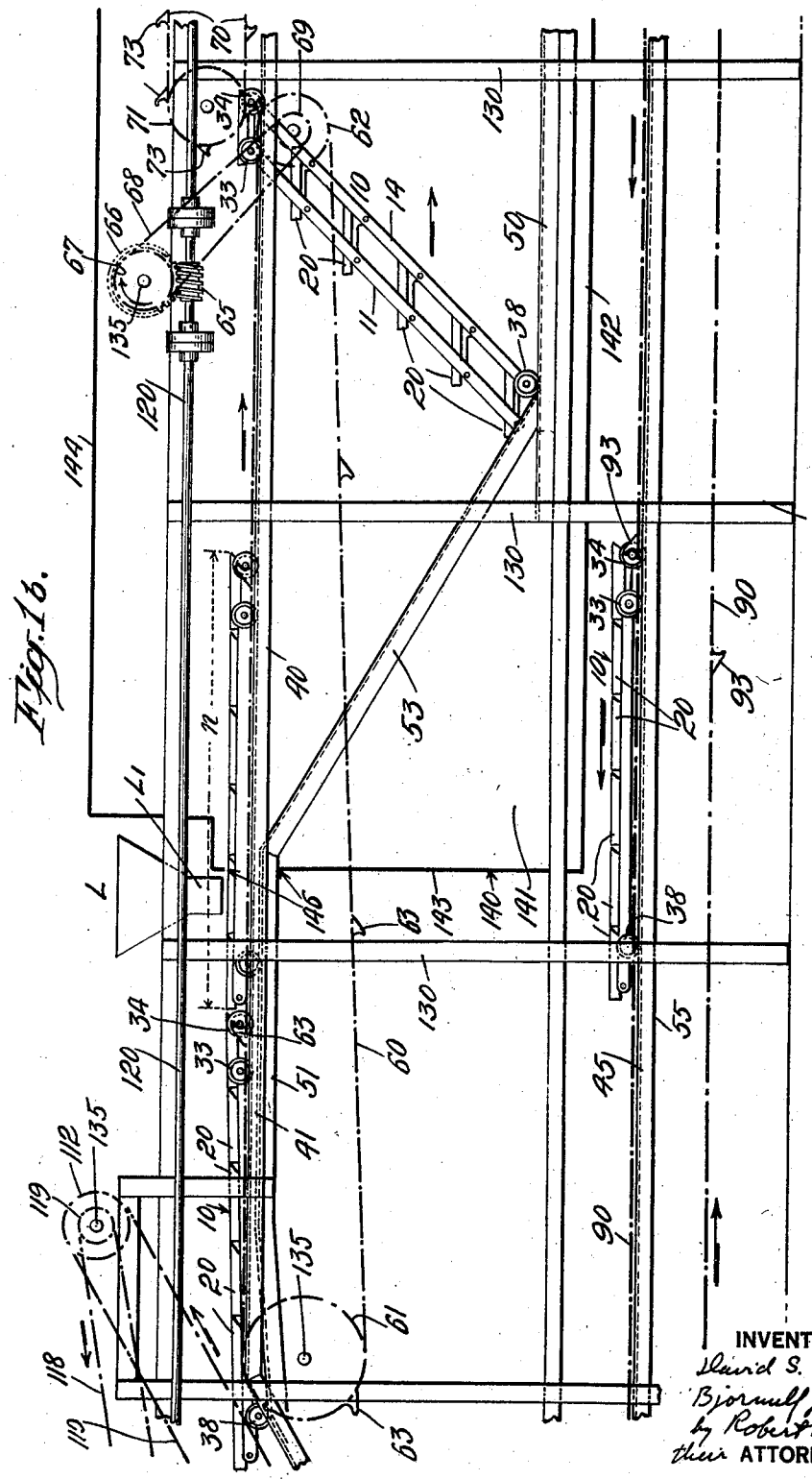

Fig. 16.

INVENTORS
David S. Baker and
Bjornulf Johnsen
by Robert W Byerly
their ATTORNEY

Aug. 5, 1930. D. S. BAKER ET AL 1,772,024

APPARATUS FOR HANDLING MATERIALS

Filed March 24, 1927 7 Sheets-Sheet 3

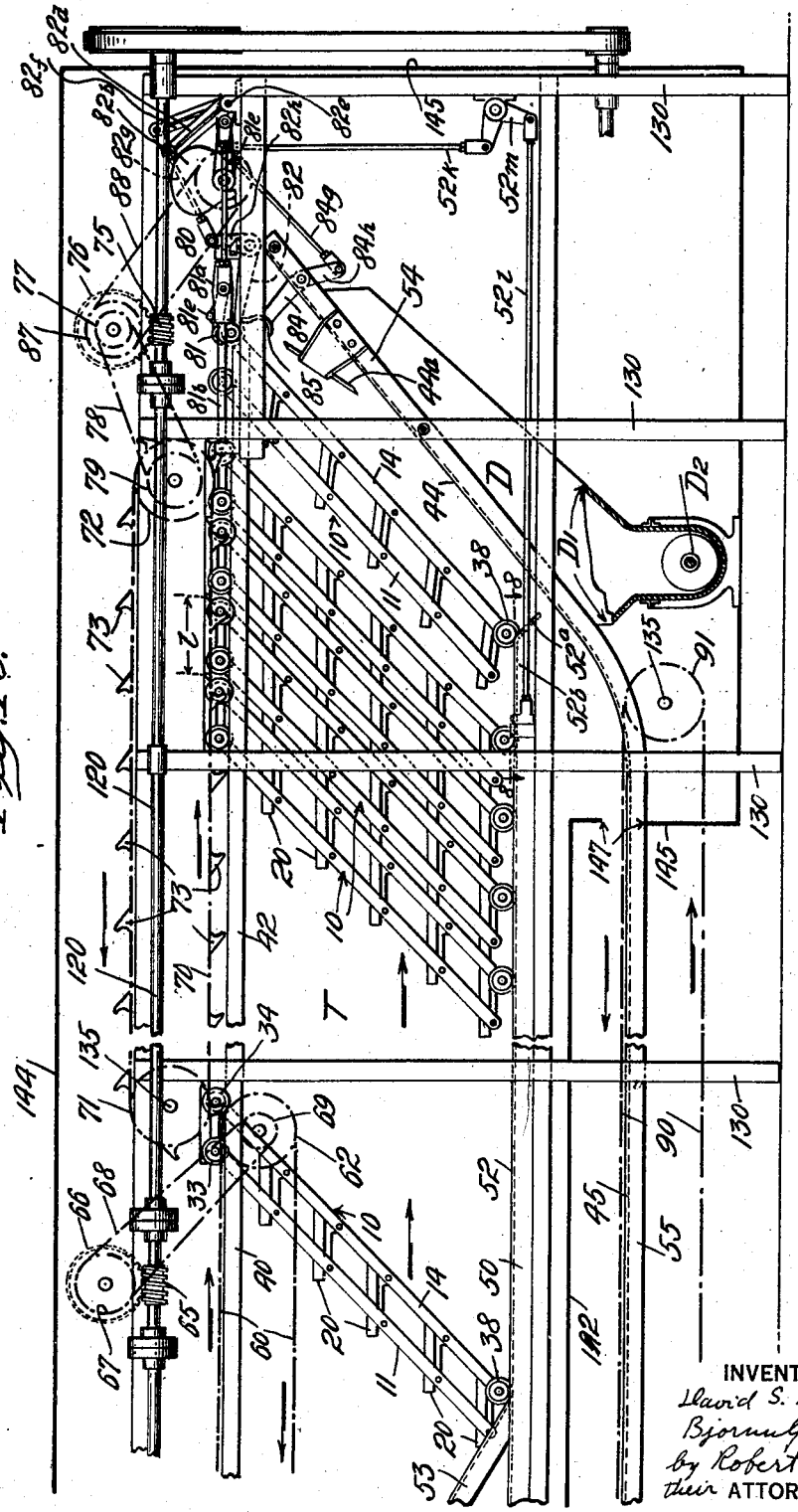

Fig. 1c.

INVENTORS
David S. Baker and
Bjornulf Johnsen
by Robert W Byerly
their ATTORNEY

Aug. 5, 1930. D. S. BAKER ET AL 1,772,024

APPARATUS FOR HANDLING MATERIALS

Filed March 24, 1927 7 Sheets-Sheet 4

Fig. 2.

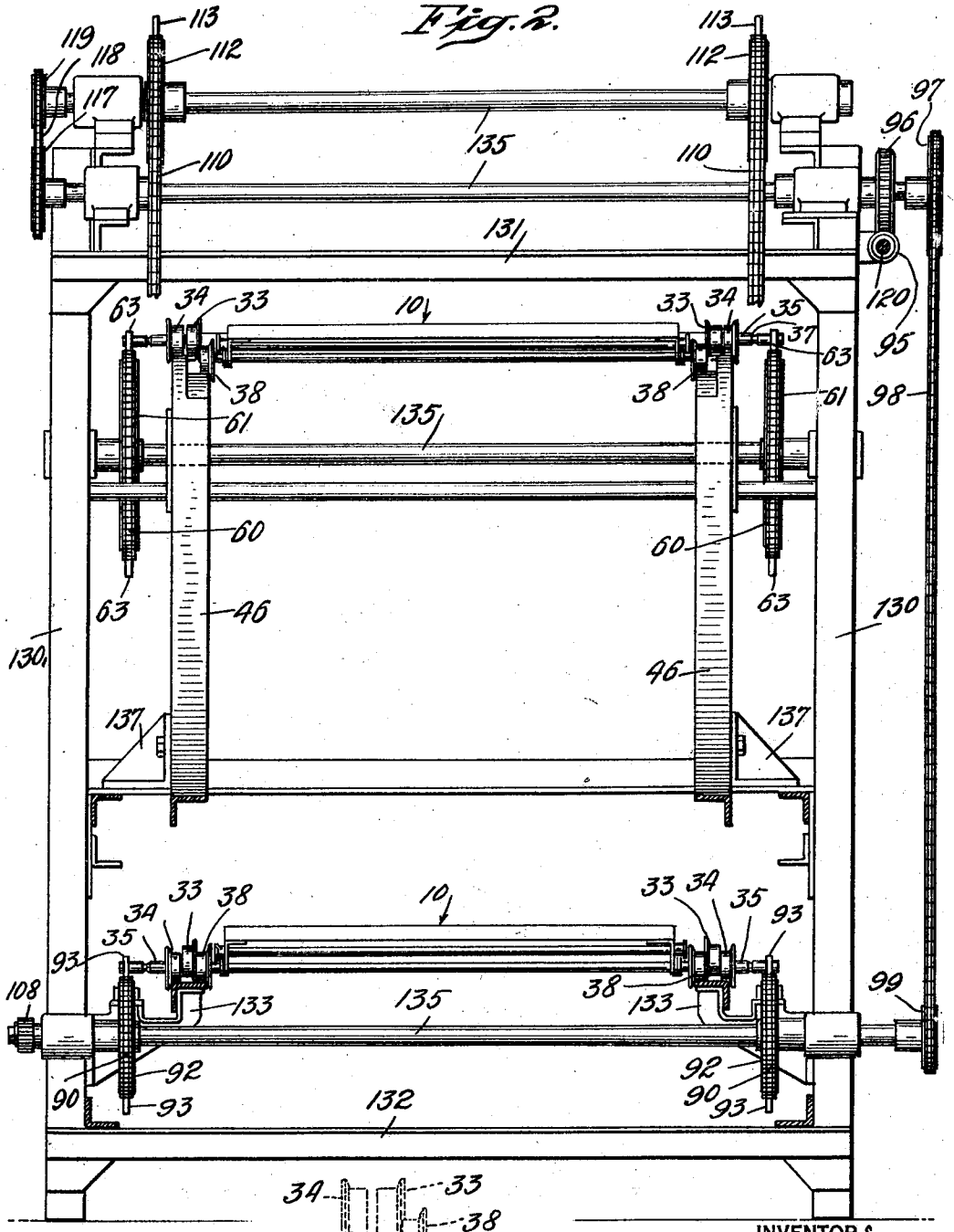

Fig. 9.

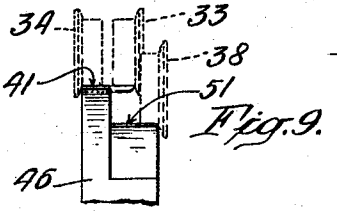

INVENTORS
David S. Baker and
Bjornulf Johnsen
by Robert W. Byerly
their ATTORNEY

Aug. 5, 1930. D. S. BAKER ET AL 1,772,024

APPARATUS FOR HANDLING MATERIALS

Filed March 24, 1927 7 Sheets-Sheet 5

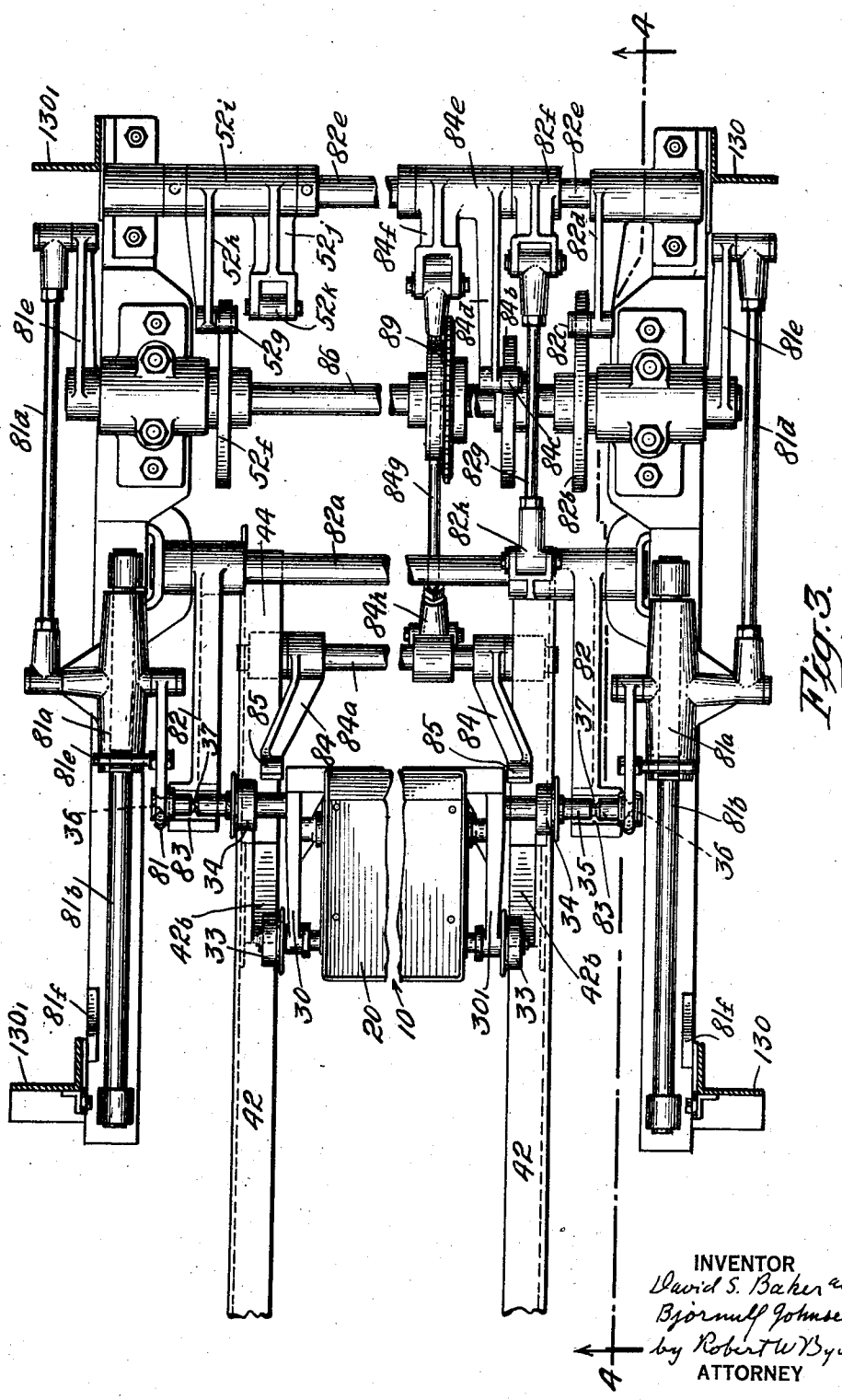

Fig. 3.

Aug. 5, 1930. D. S. BAKER ET AL 1,772,024

APPARATUS FOR HANDLING MATERIALS

Filed March 24, 1927 7 Sheets-Sheet 6

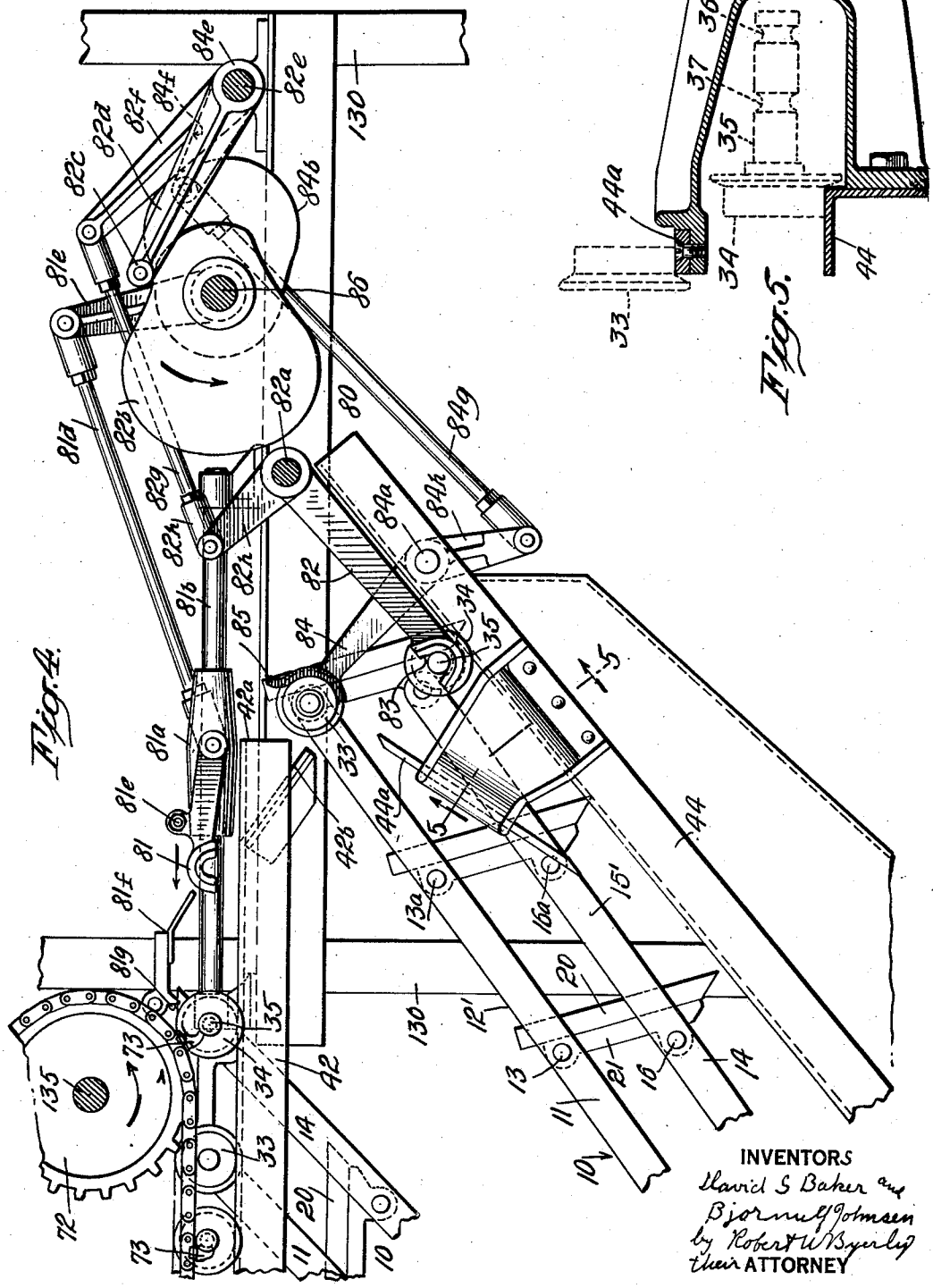

Fig. 4.

Fig. 5.

INVENTORS
David S. Baker and
Bjornulf Johnsen
by Robert W. Byerly
their ATTORNEY

Aug. 5, 1930. D. S. BAKER ET AL 1,772,024

APPARATUS FOR HANDLING MATERIALS

Filed March 24, 1927 7 Sheets-Sheet 7

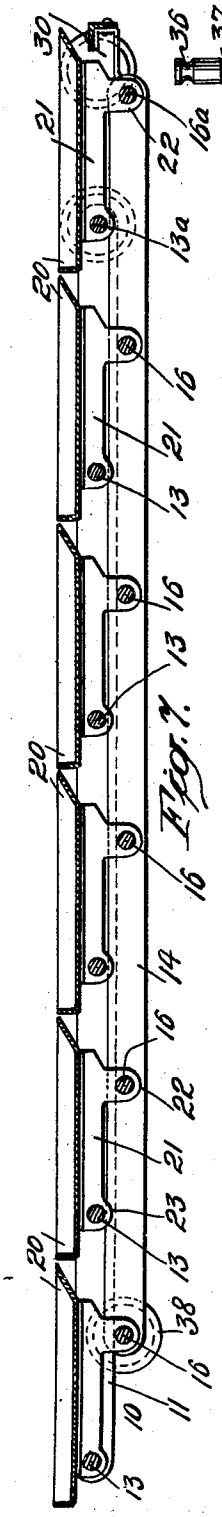

Fig. 7.

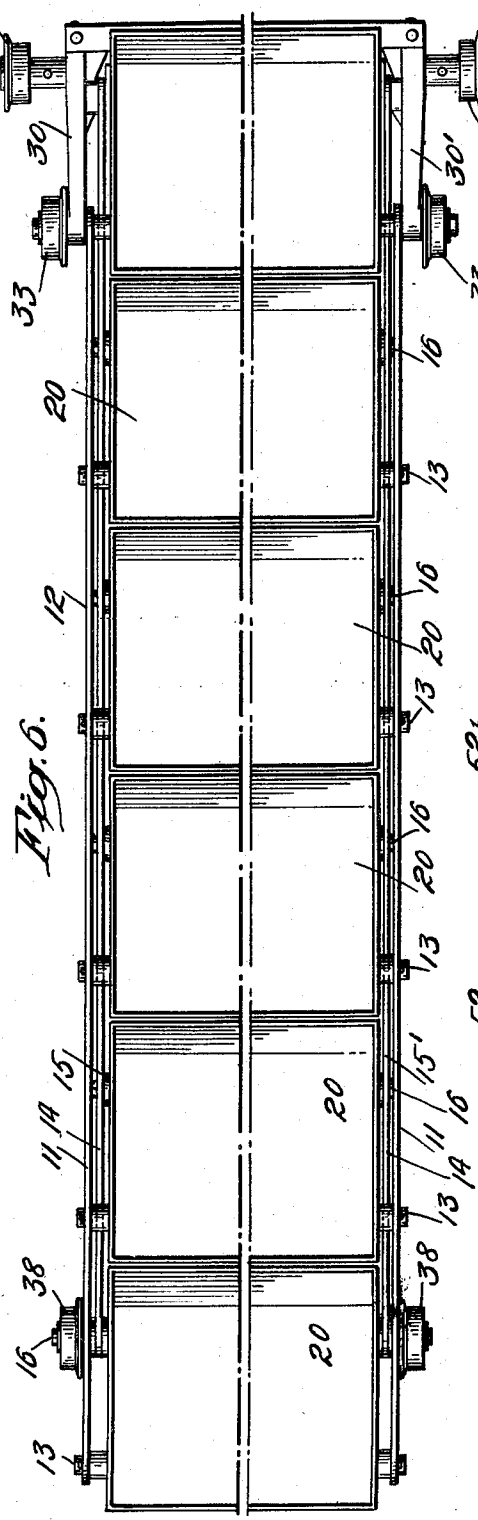

Fig. 6.

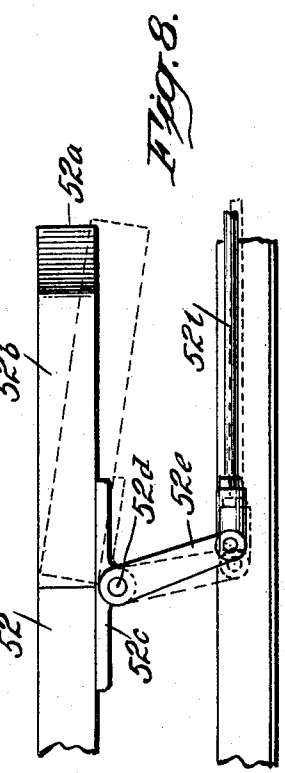

Fig. 8.

INVENTORS
David S. Baker and
Bjornulf Johnsen
by Robert W Byerly
their ATTORNEY

Patented Aug. 5, 1930 1,772,024

UNITED STATES PATENT OFFICE

DAVID S. BAKER, OF GREENWICH, CONNECTICUT, AND BJORNULF JOHNSEN, OF BROOKLYN, NEW YORK; SAID JOHNSEN ASSIGNOR TO SAID BAKER

APPARATUS FOR HANDLING MATERIALS

Application filed March 24, 1927. Serial No. 177,867.

This invention relates to apparatus for handling materials, and aims to facilitate the movement, and more particularly the treatment, of materials.

The present invention relates to improvements in the apparatus described and claimed in the patent of David S. Baker, Patent No. 1,672,404, patented June 5, 1928. In the apparatus described in that application, a considerable number of individual carrying elements or trays are moved one behind another in single file past a loading station, in order that they may be loaded conveniently, and then closely spaced in multiple file through a treatment space to facilitate treatment of the material on the carrying elements or trays. The carrying elements are mounted in sets on collapsible carriers so arranged that those of each set may be placed in edge-to-edge relation in a common plane when passing the loading station and in superimposed relation in parallel planes while traveling through the treatment space.

In the particular apparatus described in that application, the carriers are suspended from a horizontal track with the carrying elements of each carrier one directly above another during the movement of the carriers through the treatment space, and consequently the distance between the planes of the superimposed carrying elements is necessarily as great as the length of a carrying element.

The present invention economizes the space occupied by the apparatus as well as the quantity of drying medium or other gas used in the treatment of the material by providing means for placing the carrying elements of each carrier in stepped relation in the treatment space, so that the superimposed carrying elements are located in planes separated by distances materially less than the length of a carrying element. The invention includes also an improved form of collapsible carrier and improved means for supporting the same.

A further feature of the present invention, which has the effect of economizing the floor space occupied by the apparatus, consists in providing two tracks, or two sets of tracks, located one above the other for supporting the carriers and means for transferring the carriers from one set of tracks to the other at each end of the tracks, so that the carriers may be returned to the loading station in a path directly above or below that in which they move outwardly from the loading station.

A further feature of the present invention, which has the effect of making the apparatus still more compact, consists in providing means for placing the carrying elements of each carrier substantially in a common plane during the return movement of the carrier.

Other objects and advantages of the invention are hereinafter described in connection with a detailed description of a specific apparatus embodying the invention, which is shown in the accompanying drawings, in which:—

Figs. 1ª, 1ᵇ, and 1ᶜ are the front, middle and rear parts of a partly diagrammatic side elevation of the entire apparatus;

Fig. 2 is a transverse section of the apparatus taken on the line 2—2 of Fig. 1ª;

Fig. 3 is a plan view of the part of the apparatus shown at the right hand side of Fig. 1ᶜ, on a larger scale;

Fig. 4 is a side elevation of this part of the apparatus sectioned on the line 4—4 of Fig. 3;

Fig. 5 is an enlarged fragmentary section on the line 5—5 of Fig. 4;

Fig. 6 is a plan view, and Fig. 7 a central vertical section, of one of the carriers collapsed so as to place its trays in a common horizontal plane;

Fig. 8 is an enlarged fragmentary section on the line 8—8 of Fig. 1ᶜ, showing a switch in the lower tracks; and

Fig. 9 is a detail view showing the tray wheel and trackway arrangement.

The apparatus illustrated includes a large number of collapsible carriers 10 each provided with a plurality of trays 20, and means for moving these carriers in a closed circuit which takes each tray past a loading station L, through a treatment space T, past a dumping station D, and back to the loading station.

The construction of a carrier 10 is best shown in Figs. 4, 6 and 7. The carrier has a

rear connecting member 11 consisting of rigid side bars 12, 12′ joined by tie rods 13 and a front connecting member 14 which is similar except that its side bars 15, 15′ are slightly closer together than those of the rear connecting member. A number of trays 20 are hinged to the connecting members 11, 14. Each tray has on its bottom two spaced cross bars 21 having depending tabs 22 near their front ends. The tabs 22 are pivoted on the tie rods 16 of the front connecting member 14 while the rear ends 23 of the cross bars 21 are pivoted on the tie rods 13 of the rear connecting member 11. The distance between the adjacent tie rods of each connecting member is equal to the length l of one of the trays 20 so that the trays may be brought into edge-to-edge relation in a common plane by bringing the front and rear connecting members together as shown in Figs. 7 and 8. In this position one edge of the side bars 15, 15′ of the front connecting member comes in contact with the tie rods 13 of the rear connecting member as shown in Fig. 8. By spreading the connecting members apart the trays 20 may be brought into superimposed relation. The connecting members serve to keep the trays parallel in all positions thereof. Supporting members 30, 30′ are hinged to the upper tie rods 13^a, 16^a of the rear and front connecting members outside the side bars of the connecting members. The supporting members, like the cross bars 21, have depending tabs 32 which are pivoted on the upper tie rod 16^a so that the supporting members are always parallel to all the cross-pieces 21 and to the trays. The supporting members are provided with two pairs of flanged wheels 33, 34. The rearmost pair of wheels 33 face outwardly and serve to support the rear connecting member 11. The front pair of wheels 34, which support the front connecting member 14, face inwardly and are further apart than the rear pair. Projecting along the axis of the front wheels 34, are fingers 35, each provided with two grooves 36, 37. At the ends of the lowest tie rod 16^a of the front connecting member 14 are a pair of outwardly facing flanged wheels 38 which are closer together than either pair of the upper wheels 33, 34.

It should be noted that whenever the two upper pairs of wheels 33, 34, are supported on the same horizontal track, each tray of the carrier will be horizontal, and that when the lower wheels 38 are supported on a track slightly below that supporting the upper wheels, the trays will be in edge-to-edge relation in a common horizontal plane, while when the lower wheels are supported on a track substantially below that which supports the upper wheels, the trays will be in superimposed relation.

Tracks are provided for supporting and guiding the carriers by engagement with their wheels. There is an upper track 40 for the upper wheels 33, 34, and a lower track 50 of a slightly narrower gauge for the lower wheels 38.

The arrangement of the tracks, 40, 50 may best be seen in Figs. 1^a, 1^b, 1^c. The tracks have horizontal portions 41, 51 extending under the loading station L in substantially the same horizontal plane, the portion 51 lying slightly below the portion 41 to position the trays of each carrier in a common horizontal plane at this point. In the treatment space T, the tracks have horizontal portions 42, 52 which are spaced apart in a vertical direction by a distance less than the length of the connecting members 11, 14 of the carriers, to position the trays of each carrier in superimposed stepped relation at this point. The loading portion 51 and the treatment portion 52 of the track 50 are connected by a downwardly inclined portion 53. The two rails forming the portion 42 of the track 40, are split near the outer end of this portion of the track to provide a horizontal outer track section 42^a for supporting the front wheels 34 of the carrier, and a downwardly inclined inner portion 42^b for supporting the rear upper wheels 33 of the carrier. At the dumping station D, the tracks have inwardly inclined portions 44 in a common plane. The return portions 45, 55 of the tracks extend under the treatment space in a common horizontal plane. Inclined portions 46, 56, also lying in a common plane, extend from near the inner end of the return portions 45, 55 to the inner end of the loading portions 41, 51 of the tracks. The rails of the two tracks 40, 50 may be made, each of a single piece, at the co-planar portions 44 and 54, 45 and 55, and 46 and 56 of the tracks, as shown. Breaks in the tracks occur between the portions 42, 52 and the portions 44, 54, and between the portions 45, 55 and the portions 46, 56. The means for supporting the wheels of the carriers at these breaks in the tracks are described in connection with the moving means.

Automatic movement of the carriers 10 along the tracks is secured by conveyers positively connected to a common driving means, so that they operate in timed relation to each other. Each conveyer consists of two chains having reaches lying close to a portion of one of the tracks, and provided with flights which engage the fingers of each carrier. In addition to the conveyers, the moving means include a transfer mechanism for transferring each carrier from the treatment portions 42, 52 of the tracks to the portions 44, 54 of the tracks in such manner as to dump the material from the trays of the carrier, and a tip table for transferring the carriers from the horizontal portions 45, 55 of the tracks to the inclined portions 46, 56.

The moving means will be described in the order in which they operate upon a carrier on its circuit in the apparatus. A loading

conveyer 60, consisting of a pair of chains passing over sprockets 61, 62 and provided with flights 63, which engage the outer grooves 36 of the fingers 35 of each carrier, draws each carrier past the loading station L and into the treatment space T. A treatment conveyer 70, consisting of a pair of chains passing over sprockets 71, 72 and provided with flights 73, which engage the inner grooves 37 of the fingers 35 of each carrier, draws the carriers through the treatment space. A transfer mechanism 80 moves each carrier forward from the position in which it is left by the treatment conveyer 70, and transfers it to the inclined portions 44, 54 of the tracks, at the same time tipping up its trays 20, so as to discharge the material therefrom. The transfer mechanism includes reciprocating grippers 81, which engage the outer grooves 36 of the fingers 35 of each carrier just as it is released by one of the flights 73 of the conveyer 70, and pull the carrier rapidly forward away from the following carriers to the ends of portions 42, 52 of the tracks; an oscillating elevator 82 having a grooved end 83 which receives the fingers 35 as the wheels 38 pass over the outer end 42^a of portion 42 of the track 40, and lowers the front connecting member 14 of the carrier until its wheels 34 engage the inclined portion 44 of the track 40; an oscillating pusher 84 having a curved support 85 which receives the rear upper wheels 33 of the carrier as these wheels roll off the end of an inner inclined portion 42^b of the track 40 and transfers them to a short inclined track section 44^a from the lower end of which they drop upon the inclined portion 44 of the track 40; and a switch 52^b near the end of the portion 52 of the track 50, which is swung outward just as each carrier rolls down the inclined portions 44, 54 of the tracks. A return conveyer 90, consisting of a pair of chains passing over sprockets 91, 92 and provided with flights 93 positioned to engage the outer grooves 36 of the fingers 35 of the carriers, draws each carrier along the horizontal return tracks 45, 55, and moves it upon a tip table 100 provided with tracks 101, 102 corresponding with the tracks 40, 50, and with a bumper 103 for stopping the movement of each carrier placed upon it. The tip table 100 is mounted on a shaft 104 journalled in bearings 105, and is oscillated between a horizontal position, in which it is in line with the portions 45, 55 of the tracks, to an inclined position (shown in dotted lines in Fig. 1^a) in which it is in line with the inclined portions 46, 56 of the tracks. A conveyer 110, consisting of chains passing over sprockets 111, 112 and provided with flights 113 for engaging the inner grooves 37 of the fingers 35, draws each carrier from the tip table 100, and upwardly along the inclined portions 46, 56 of the tracks into position to be re-engaged by the load conveyer 60.

The speed of the conveyers and other moving means is so related that the trays of the carriers move past the loading station closely spaced in single file, and through the treatment space closely spaced in multiple file, while the carriers are spaced apart at the dumping station to facilitate the dumping and spaced apart during the return movement to minimize a number of carriers not in active operation. In order to control the movements of each carrier, the flights of the different conveyers are spaced apart by distances proportional to the rates of movement of the conveyers, and the transfer mechanism and tip table are timed to operate between the movements of each carrier caused by the flights of a conveyer. Thus, taking the length l of a tray as the linear unit, and a number of trays in each carrier as n, the rate of movement of the load conveyer 60 is n linear units per unit of time, and its flights 63 are n linear units apart; the rate of movement of the treatment conveyer 70 is one linear unit per unit of time and the flights of this conveyer are spaced one linear unit apart; while the rate of the return conveyers 90 and 110 is greater than n linear units per unit of time. In the form shown, there are six trays in each carrier, and the rate of movement of the return conveyers is twelve linear units per unit of time, and the flights of these conveyers are twelve linear units apart. In other words, the load conveyer moves six times as fast as the treatment conveyer, and the return conveyer is twice as fast as the load conveyer. Each part of the transfer mechanism, and the tip table completes one cycle of movement in one unit of time, as to say, during the time required for the treatment conveyer to move the length of one tray.

Various forms of known mechanism may be used to move the conveyers of the proper relative rates above specified. Mechanism suitable for this purpose is shown in the drawings, and consists of well-known mechanical elements connecting a main drive shaft 120 to each of the conveyers. Special mechanism for operating the other moving parts from this driving shaft is hereinafter described.

The mechanism for driving the conveyers is clearly shown diagrammatically in Figs. 1^a, 1^b, 1^c, and as the parts of this mechanism are well-known mechanical elements, it will be sufficient to list the parts driving each conveyer. The load conveyer 60 is driven from the shaft 120 through the following parts:— Worm 65, gear 66, sprocket 67, chain 68, sprocket 69, sprocket 62. The drive of the treatment conveyer 70 includes the following parts:—Shaft 120, worm 75, gear 76, sprocket 77, chain 78, sprocket 79, sprocket

72. The drive of the return conveyer 90 includes the following parts:—Shaft 120, worm 95, gear 96, sprocket 97, chain 98, sprocket 99, sprocket 92. The drive of the conveyer 110 includes the following parts:—Shaft 120, worm 95, gear 96, sprocket 117, chain 118, sprocket 119, sprocket 112.

All parts of the transfer mechanism 80 are driven from a cam shaft 86, which is connected with the main driving shaft 120, through worm 75, gear 76, sprocket 87, chain 88, sprocket 89. The sprockets 77, 79, and 72, are so proportioned to the sprockets 87, 89 that the cam shaft 86 makes one revolution, while the conveyer 70 is moving through a distance equal to the length of one tray. Each gripper 81 is pivoted on a slide 81^a mounted on a horizontal rod 81^b and reciprocated by a crank 81^c, fixed on the cam shaft 86, and connected to the slide by a connecting rod 81^d. The gripper carries a pin 81^e, which engages a pivoted cam 81^f resting against a pin 81^g, when the slide 81^a is moved toward the conveyer 70, so as to raise the gripper and permit it to drop over a finger 35 of the carrier which has just been released by a flight 73 of the conveyer 70. The elevators 82 are fixed on a shaft 82^a, which is oscillated by means of a cam 82^b, fixed on the cam shaft 86. The connection between this cam and the shaft 82^a includes a cam follower 82^c carried by an arm 82^d, fixed on a shaft 82^e, an arm 82^f also fixed on the shaft 82^e, and connected by a connecting rod 82^g to an arm 82^h, fixed on the shaft 82^a. The pushers 84 are fixed on a shaft 82^a, which is oscillated by a cam 84^b, fixed on the cam shaft 86. The connection between this cam and the shaft 84^a includes a cam follower 84^c, carried by an arm 84^d, fixed on a sleeve 84^e loosely mounted on the shaft 82^e, an arm 84^f, fixed on the sleeve 84^e, and connected by a connecting rod 84^g with an arm 84^h, fixed on the shaft 84^a.

The switch 52^b in each rail of the track 50 is secured to the fixed portion 52 of one rail of this track by hinge 52^c. The switch is fixed to the pivot 52^d of this hinge, and an arm 52^e is also fixed to this pivot. The arm is periodically oscillated to open the switch by means of a cam 52^f on the cam shaft 86. A connection between the cam 52^f and the switch arm 52^e includes a cam follower 52^g connected by an arm 52^h, fixed on a sleeve 52^i loosely mounted on the shaft 82^e, an arm 52^j also fixed on the sleeve 52^i, and connected by means of two connecting rods 52^k, 52^l, and a bell crank lever 52^m with the arm 52^e. The timing of the parts during each cycle of operation of the transfer mechanism is hereinafter described in connection with the operation of the complete apparatus.

The tip table 100 is oscillated by means of a cam 106, fixed on a shaft 107 which is driven from the shaft of the sprockets 99 and 92, by means of gears 108. The tip table is connected with this cam by means of an arm 107^a fixed to the table shaft 104, a connecting rod 107^b and a pair of rigidly connected arms 107^c, one of which carries a cam follower 107^d riding on the cam 107.

Various means for supporting the tracks and working parts which have been described can readily be arranged by any competent builder, and the particular form of such supporting means is not a vital feature of the present invention. A practical means of supporting the tracks and the working parts is, however, indicated in the drawings and particularly in Fig. 2. The supporting frame shown consists of two vertical side frames 130, 130′ which may be stiffened by cross-pieces 131, 132, positioned so as not to interfere with the movement of the carriers. The tracks 40, 50 may be supported on brackets 133 extending outwardly from the side frames. The various sprockets for the driving chains, conveyer chains and other moving parts may be mounted on shafts 135, extending between the side frames and journalled therein. The various shafts forming part of the transfer mechanism and a tip table shaft may be similarly mounted.

The apparatus for loading the trays at the loading station L may consist merely of a chute L^1, from which the material is discharged continuously upon the trays passing below it. The apparatus for receiving the material at the dumping station D may consist of a hopper D^1 at the bottom of which is a screw conveyer D^2.

For certain treatment of the materials, such as drying, it is desirable to have the treatment space T enclosed. This may be done by a sheathing 140, having sides 141 covering the side frames 130, a bottom 142 extending below the portion 52 of the lower track and above the return tracks 45, 55, and end wall 143 just beyond the loading station, and a top wall 144 lying above the portion 42 of the track 40. The rear end of the casing may be enclosed by a wall 145, which encloses the transfer mechanism and dumping station, and is connected with the rear end of the bottom 142 by a vertical wall 145 positioned a short distance beyond the bottom of the inclined portion 45 of the track 40. The entrance opening 146 and the outlet opening 147 are formed respectively in the vertical walls 143 and 145, and consequently at points where the tracks 40 and 50 lie in the same horizontal plane. In consequence, both of these openings may be made low, only slightly greater than the height of one tray. The only other openings required in the sheathing are the small openings for the passage of the various shafts and the conveyer chains, and an opening for the screw conveyer D^2. Thus notwithstanding the continuous operation of the apparatus, the treat-

ment space may be so completely enclosed that the atmospheric condition desired for the treatment of material may easily be maintained therein.

The operation of the device described is as follows:—The main driving shaft is driven continuously from any convenient source of power. Material to be treated is supplied continuously through the chute L^1, and the screw conveyer D^2 is operated continuously. The carriers are drawn successively under the hopper D^1 at the loading station with their wheels supported on the substantially co-planer portions 41, 42 of the tracks 40, 50, so that their trays lie in a common horizontal plane. The flights of the conveyer 60 are so spaced that the front edge of the front tray of each conveyer follows closely behind the rear edge of the rear tray of the preceding carrier. As the carriers pass under the loading device, their trays form a continuous traveling support upon which material is continuously discharged from the chute L^1. Each carrier enters the treatment space T through the opening 146, with its trays in edge-to-edge relation in a common plane; but as soon as the lower wheels 38 reach the inclined portion 53 of the track 50, its connecting members 11, 14 separate, placing its trays in stepped superimposed relation. By the time each carrier has reached this condition, its fingers 35 are released by the conveyer 60 and picked up by the conveyer 70, which moves the carrier slowly forward with the front edge of each of its trays close with the rear edge of the corresponding tray of the preceding carrier. Thus in the treatment space T, the trays form a set of superimposed continuous traveling supports which are closely spaced, but separated by a distance sufficient to permit the circulation of air or other gas between them for the treatment of material. As each carrier approaches the end of the portions 42, 52 of the tracks, it is released by the conveyer 70, and moved rapidly forward by the grippers 81, so as to space it apart from the following carriers. Just as the front upper wheels 34 move off the end 42^a of the track 40, the fingers 35 of the carrier fall into the grooves 83 of the elevator 82, which is in raised position as shown in Fig. 1^c. The elevator then moves downward carrying down the front connecting member 14 of the carrier, while its upper rear wheels 33 roll down the inclined track sections 42^b, and its lower wheels 38 roll down the inclined track sections 52^a. When the elevator has moved down far enough to free the rear upper wheels 33 from the inclined section 42, these wheels fall into the curved ends 85 of the pushers 84, which then occupy the positions shown in Figs. 1^c and 4. This holds up the rear connecting member 11, while the front connecting member 14 is lowered, thus tipping up the trays of the carrier and dumping the material thereon into the hopper D^1. While the fingers of the carrier are held stationary in the position shown in Fig. 4 by a dwell in the movement of the elevator 82, the rear upper wheels 33 are moved downwardly by the pusher 84, and placed upon short inclined track sections 44^a. At the same time, the switch 52^b is opened, permitting the lower wheels 38 of the carrier to drop upon the inclined track sections 54. The downward movement of the rear connecting member 11 caused by the pusher 84, brings the trays to a more nearly horizontal position. Then while the rear upper wheels 33 are resting on the track sections 44^a, and the lower wheels are resting on the inclined track sections 54, the elevator 82 makes an additional downward movement, passing below the inclined track 44, allowing the front upper wheels 34 of the conveyer to rest upon this track and releasing the fingers of the carrier. The carrier then slides down the inclined portions 44, 54 of the tracks, and as it does so, its rear upper wheels 33 fall from the track sections 44^a to the track 44, allowing the frame of the carrier to collapse, and bringing its trays substantially into a common plane. As the carrier slides upon the horizontal portions 45, 55 of the tracks, it is engaged and moved rapidly forward by the conveyer 90. When the carrier has completely passed beyond the switch 52^b, the switch closes. In the meantime, the gripper 81 has moved forward to engage the next carrier, and the elevator and the pusher have return to their raised positions. The transfer mechanism thus operates to dump each carrier, and transfer it to the horizontal return tracks before the next carrier is released by the conveyer 70. The carriers are moved rapidly and in spaced relation along the portions 45, 55 of the tracks by the conveyer 90. Just as each carrier has been placed on the tip table 100 by this conveyer, the table tips up and the carrier is brought into engagement with the conveyer 110, which moves it rapidly up the inclined portions 46, 56 of the tracks. As the front end of each carrier reaches the upper end of the inclined track sections, it is released by the conveyer 110 and engaged by the conveyer 60. Its movement then becomes slower. The movement is such as to bring the rear end of the carrier to the upper end of the inclined portions 46, 56 of the tracks, just as the front end of the next carrier is brought to this point by the conveyer 110. The conveyers are thus replaced in closely spaced relation just before they reach the loading station again.

What is claimed is:—

1. Apparatus for handling materials, comprising a plurality of carrying elements connected together in sets, automatic means for moving the carrying elements of each set one

close behind the other in a common plane, and then in parallel planes separated by distances less than the length of a carrying element and in close proximity with the carrying elements of the preceding set.

2. In apparatus for handling materials, the combination with a plurality of carriers each having a connecting member, carrying elements hinged thereto at points separated by distances substantially equal to the length of a carrying element, and means for keeping all the carrying elements horizontal, of means for moving the carriers closely spaced one behind the other, and means operative during such movement to incline the connecting members of the carriers at the same angle so as to place their carrying elements in common horizontal planes separated by distances less than the length of a carrying element.

3. In apparatus for handling materials, the combination with a carrier having a connecting member, and carrying elements hinged thereto at points spaced by distances equal to the length of a carrying element, of two vertically spaced parallel supports for the connecting member of the carrier positioned to hold the connecting member in inclined position, means for moving the carrier along said supports, and means for retaining the carrying elements parallel to said supports during such movement.

4. In apparatus for handling materials, the combination with a carrier having two connecting members and carrying elements hinged thereto in parallelogram arrangement, a rail supporting one end of each connecting member of the carrier, means for moving the carrier along said rail, and a second rail which supports the other end of one of the connecting members and which extends adjacent to the first rail, diverges therefrom and then extends parallel thereto at such distance therefrom as to hold the connecting members of the carrier at an acute angle to the rails.

5. In apparatus for handling materials, the combination with a carrier having parallel connecting members, and a plurality of parallel carrying elements hinged at their front and rear edges to the connecting members respectively, of means for placing the connecting members together to place the carrying elements in edge-to-edge relation, means for moving the carrier, means operative on such movement to permit a separation of the connecting members, and means limiting such separation to a distance less than the length of a carrying element.

6. Apparatus for handling materials, comprising the combination with a treatment space and a loading station, of a continuous rapidly traveling support for receiving the material at the loading station, a plurality of continuous superimposed slowly traveling supports for the material in the treatment space having their ends in stepped relation, means for repeatedly removing from the advancing end of the support at the loading station a plurality of sections each greater in length than the distance between the superimposed supports and applying such sections individually to the receding ends of the superimposed supports, and means for repeatedly removing a section of the same length from the advancing end of each of the superimposed supports and applying such sections collectively to the receding end of the support at the loading station.

7. In apparatus for handling materials, the combination with two parallel rails, of carriers each having a rigid connecting member supported on said rails at two points separated by a distance greater than the distance between the rails so that the connecting member is inclined to the rails, and carrying elements secured to the connecting member and parallel to the rails.

8. In apparatus for handling materials, the combination with two parallel rails, of a carrier comprising a rigid connecting member, two engaging means secured directly to the connecting member and separated by a distance greater than the distance between the rails and each engaging one of the rails, carrying elements hinged to the connecting member, and means for maintaining said carrying elements parallel to the rails.

9. In apparatus for handling materials, the combination with two parallel rails, of a carrier comprising a rigid supporting member having two spaced wheels running on one of the rails to maintain it parallel to said rail, two rigid connecting members hinged to said supporting member, a wheel on one of the connecting members engaging the other rail and separated from the first-mentioned wheels by a distance greater than the distance between the rails so that said connecting member is inclined to the rails, and carrying elements hinged to said connecting members in parallelogram arrangement.

10. In apparatus for handling materials, the combination of two tracks of different gauges which extend in substantially the same horizontal plane and then diverge and extend in spaced horizontal planes, of a carrier comprising a four-wheeled truck running on the track of the wider gauge, two rigid connecting members hinged to the truck, carrying elements hinged to the said connecting members in parallelogram arrangement, and a pair of wheels on one of the connecting members running on the track of the narrower gauge and separated from the wheels of the truck by a distance greater than the distance between the spaced portions of the tracks.

11. In apparatus for handling materials, the combination with a rail, of a carrier comprising a rigid connecting member, means se-

cured directly to the connecting member and engaging the rail, carrying elements hinged to the connecting member, means to keep the carrying elements parallel to the rail, and means for tripping the connecting member about said engaging means.

12. In apparatus for handling materials, the combination with a track, of a carrier comprising a rigid connecting member, a pair of wheels mounted on the outer sides of the connecting member and engaging the track, carrying elements hinged to the connecting member, means for keeping the carrying elements parallel to the track, and means for tipping the connecting member about the axis of said wheels.

13. In apparatus for handling materials, the combination with a rail, of a carrier comprising a rigid supporting member having two spaced wheels running on said rail to maintain it parallel to the rail, two rigid connecting members hinged to said supporting member, and carrying elements hinged to said connecting members in parallelogram arrangement so as to maintain the connecting members parallel to each other and the carrying elements parallel to the supporting member and the rail.

14. In apparatus for handling materials, the combination with two tracks of different gauges, of a carrier comprising a four-wheeled truck running on the track of the wider gauge, two rigid connecting members hinged to the truck, carrying elements hinged to the two connecting members in parallelogram arrangement, and a pair of wheels mounted on one of the connecting members at a distance from the truck and running on the track of the narrower gauge.

15. In apparatus for handling materials, the combination of two tracks of different gauges which extend in substantially the same horizontal plane and then diverge and extend in spaced horizontal planes, of a carrier comprising a four-wheel truck running on the track of the wider gauge, two rigid connecting members hinged to the truck, carrying elements hinged to the two connecting members in parallelogram arrangement, and a pair of wheels on one of the connecting members running on the track of the narrower gauge.

16. Apparatus for handling materials, comprising a plurality of carriers each provided with wheels, upper and lower tracks for supporting the wheels of the carriers, a conveyer adapted to engage the carriers on the upper track and move them in one direction, a conveyer adapted to engage the carriers on the lower track and move them in the opposite direction, means located at one end of the tracks and synchronized with the conveyers for hoisting the carriers one at a time from the lower track to the upper track, and means located at the other end of the tracks and synchronized with the conveyers for lowering the carriers one at a time from the upper track to the lower track.

17. Apparatus for handling materials, comprising a plurality of carriers having carrying elements which may be placed either in edge-to-edge or in superimposed relation, upper and lower tracks, means for moving the carriers in one direction on the upper track and in the opposite direction on the lower track, and for transferring the carriers from the upper track to the lower track at one end of the tracks and from the lower track to the upper track at the other end of the tracks, so that the carriers are moved in a closed circuit, means operative on such movement of the carriers to place their carrying elements in edge-to-edge relation in one part of the circuit and in superimposed relation in another part of the circuit.

18. Apparatus for handling materials, comprising a plurality of carrying elements, means for moving said carrying elements outwardly in sets in parallel paths one above another at relatively slow speed and interconnected means for returning them one behind another in a single path located directly above or below their outward paths at relatively high speed.

19. Apparatus for handling materials, comprising a plurality of carriers each having carrying elements which may be placed in edge-to-edge and in superimposed relation, means for moving the carriers outwardly with their carrying elements in superimposed relation, and means for returning each carrier with its carrying elements in edge-to-edge relation in a path directly above or below the outwardly moving carriers.

20. Apparatus for handling materials, comprising a plurality of carriers each having carrying elements which may be placed in edge-to-edge and in superimposed relation, means for slowly moving the carriers outwardly closely spaced and with their carrying elements in superimposed relation, and means for rapidly returning the carriers spaced apart and with their carrying elements in edge-to-edge relation.

21. Apparatus for handling materials, comprising a plurality of carriers each having carrying elements which may be placed in edge-to-edge and in superimposed relation, two tracks located one above the other, means for moving the carriers outwardly along one track, transferring them to the other track, moving them inwardly along said other track, and transferring them back to the first track so that they move in a closed circuit, means for tipping up the carrying elements of each carrier as it is transferred from one track to the other to dump material from the carrying elements, means for placing the carrying elements of each carrier in a common horizontal plane as they reach each track, and

means for changing the carrying elements of each carrier from edge-to-edge relation in a common plane to superimposed relation in spaced horizontal planes as the carrier is moved along one of the tracks.

22. Apparatus for handling materials, comprising a plurality of carriers and upper and lower tracks, means for moving the carriers along the lower track in spaced relation, means for raising the carriers, one at a time, from the lower track to the upper track, means for moving the carriers along the upper track, adapted to move each carrier through a distance equal to its length during one operation of the raising means, so that the carriers are closely spaced on the upper track.

23. In apparatus for handling materials, the combination with two relatively inclined tracks and a plurality of carriers, of a pivotally mounted table adapted to tip from alignment with one track into alignment with the other, means for operating the table at regular intervals, a conveyer adapted to move carriers along one track in spaced relation and to move each conveyer onto the tip table when it is in alignment with that track, a second conveyer adapted to move each carrier from the tip table to the other track when the table is in alignment with that track, with a third conveyer adapted to engage each carrier when it is released by the second conveyer and to move it through a distance equal to its length during each cycle of movement of the tip table.

24. In apparatus for handling materials, the combination with a horizontal track and an inclined track, of a pivotally mounted table adapted to tip from alignment with the horizontal track to alignment with the inclined track, means for moving a carrier from the horizontal track to the table, means operative thereafter to tip the table into alignment with the inclined track, and a conveyer positioned to engage the carrier when the table is tipped, and to move it from the table and up the inclined track.

25. In apparatus for handling materials, the combination with a horizontal track and an inclined track, of a pivotally mounted table adapted to tip from alignment with the horizontal track to alignment with the inclined track, a conveyer adapted to engage the rear end of a carrier on the horizontal track and to move it along said track and onto the table while the table is in horizontal position, means operative thereafter to tip the table into alignment with the inclined track, and a conveyer positioned to engage the front end of a carrier when the table is tipped and to move it from the table and along the inclined track.

26. In apparatus for handling materials, the combination of upper and lower tracks, a plurality of carriers each having two rigid connecting members and carrying elements hinged between them in parallelogram arrangement, means for moving the carriers along the upper track with both their connecting members supported by said track so as to retain the carrying elements horizontal, means for transferring each carrier from the upper track to the lower track arranged to lower one connecting member of each carrier in advance of the other, so as to place the carrying elements of the carrier in substantially vertical position in separate planes during such transfer.

27. In apparatus for handling materials, the combination with a plurality of carriers having wheels at their upper and lower ends, of upper and lower horizontal tracks for supporting the upper and lower wheels of the carriers, an inclined track extending across the ends of said horizontal tracks to receive the upper and lower wheels of each carrier therefrom, a switch at the end of the lower horizontal track, and means for opening said switch to permit the passage of each carrier along the inclined track.

28. In apparatus for handling materials, the combination with a plurality of carriers each having two connecting members and carrying elements hinged in parallelogram arrangement, and wheels at the upper ends of each connecting member and at the lower end of one connecting member, of upper and lower horizontal tracks for supporting the upper and lower wheels of each carrier, an inclined track extending across the ends of said tracks to receive the upper and lower wheels of each carrier therefrom, means for moving the wheels of each carrier off the ends of the horizontal tracks, means for transferring the front upper wheels of each carrier to the inclined tracks and for retaining them against movement therealong, means for transferring the rear upper wheels of each carrier to the inclined track operative after the front wheels have been transferred so that the carrying elements of the carrier are tipped up during the transfer, means operative thereafter to release the carrier to permit it to slide down the inclined track.

29. In apparatus for handling materials, a plurality of carriers having carrying elements, means for moving the carriers closely spaced one behind another through a treatment space, moving means for engaging each carrier as it reaches the end of the treatment space and moving it rapidly forward away from the following carriers to a dumping station, and means for tipping up the carrying elements of each carrier at the dumping station to dump the material therefrom.

30. In apparatus for handling materials, a plurality of carriers having carrying elements, a conveyer adapted to move the carriers slowly in closely spaced relation through

a treatment space, rapidly moving means adapted to engage each carrier as it reaches the end of the treatment space to move it forward away from the following conveyers and to release it, and a conveyer adapted to engage each carrier as it is released by said rapidly moving means and to move it forward at such a rate that its rear end is just in front of the front end of the next carrier released by said rapidly moving means.

31. Apparatus for handling materials, comprising a plurality of carriers each having a plurality of trays which may be placed in edge-to-edge and in superimposed relation, means for moving the carriers into a treatment chamber with their trays in edge-to-edge relation, means for moving the carriers through the treatment chamber with their trays in superimposed relation, means for moving the carriers out of the chamber with their trays in edge-to-edge relation, whereby the entrance and outlet openings of the treatment chamber may have the height of only one tray.

32. Apparatus for treating materials, comprising a combination with a loading station and a treatment chamber, of a plurality of carriers each having a plurality of trays which may be placed in edge-to-edge and in superimposed relation, means for moving the carriers successively past the loading station and into the treatment space with their trays in edge-to-edge relation, means for moving the carriers through the treatment space, and means operative on such movement to place the trays of each carrier in superimposed relation after said carrier enters the treatment space.

33. Apparatus for handling materials, comprising the combination of a plurality of individual carrying elements, means for guiding said elements to move in paths which coincide at a loading station and then diverge and extend in parallel relation through a treatment space, means for moving the carrying elements continuously at a relatively high speed where their paths are coincident, and interconnected means for moving them continuously at a relatively low speed where their paths are parallel.

34. Apparatus for handling materials, comprising the combination of a plurality of individual carrying elements, means for guiding said elements to move in paths which coincide at a loading station and then diverge and extend in parallel relation through a treatment space, and two continuously moving conveyers adapted respectively to move the elements where their paths are coincident and to move the elements where their paths are parallel, the rate of movement of the latter conveyer being equal to the rate of movement of the former conveyer divided by the number of parallel paths.

35. Apparatus for handling materials, comprising the combination with a loading station and a treatment space, of a plurality of carriers each provided with a plurality of carrying elements, means for guiding each carrier to move past the loading station with its carrying elements following one after another in a common path, and then through the treatment space with its carrying elements in parallel paths, a continuously moving conveyer adapted to engage each carrier and move it past the loading station, and a second continuously moving conveyer adapted to engage each carrier and move it through the treatment space, the rate of movement of the second conveyer being less than that of the former conveyer.

36. Apparatus for handling materials, comprising the combination with a loading station and a treatment space, of a plurality of carriers each having a plurality of carrying elements and a mounting for said elements permitting them to be placed either in superimposed or in edge-to-edge relation, means for guiding said carriers past the loading station and through the treatment space, two interconnected continuously moving conveyers for moving the carriers past the loading station and through the treatment space respectively, the rate of movement of the second conveyer being equal to that of the first conveyer divided by the number of carrying elements of each carrier, and means operative on the movement of the carriers by said conveyers to position the carrying elements of each carrier in edge-to-edge relation when the carrier is at the loading station, and in superimposed relation while the carrier is in the treatment space.

In testimony whereof we have hereunto set our hands.

DAVID S. BAKER.
BJORNULF JOHNSEN.

CERTIFICATE OF CORRECTION.

Patent No. 1,772,024. Granted August 5, 1930, to

DAVID S. BAKER ET AL.

It is hereby certified that error appears in the printed specification of the above numbered patent requiring correction as follows: Page 5, line 102, for the word "return" read returned; page 7, line 5, claim 11, for "tripping" read tipping; and that the said Letters Patent should be read with these corrections therein that the same may conform to the record of the case in the Patent Office.

Signed and sealed this 21st day of October, A. D. 1930.

M. J. Moore,
Acting Commissioner of Patents.

(Seal)