P. A. Quinan. Sheet 1. 2 Sheets.

Vessel for Storing & Transp't'g Oil.

No. 97442. Patented Nov. 30. 1869.

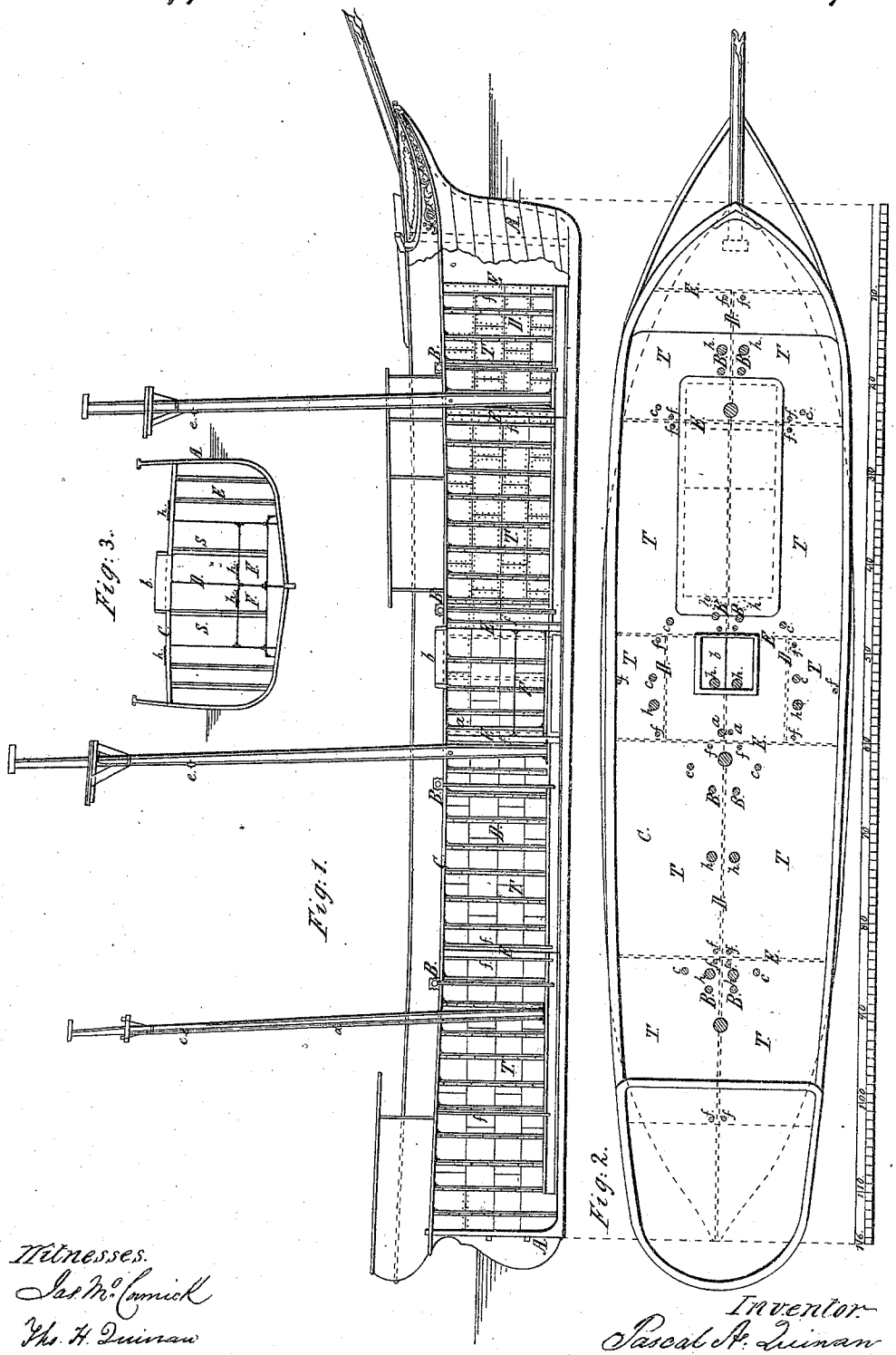

Witnesses.
Jas. McCormick
Thos. H. Quinan

Inventor.
Pascal A. Quinan

P. A. Quinan. Sheets. 2 Sheets.

Vessel for Storing & Transp'tg Oil.

No. 97442. Patented Nov. 30. 1869.

Fig. 10.

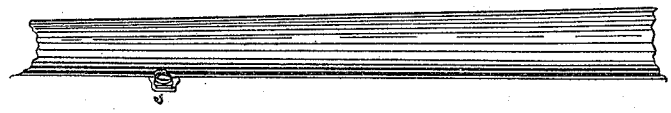

Fig. 9.

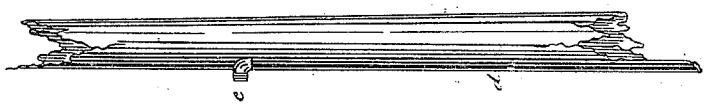

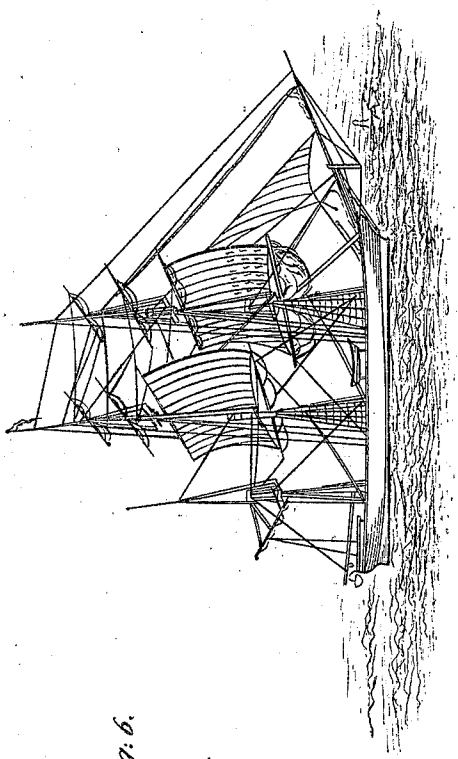

Fig. 8.

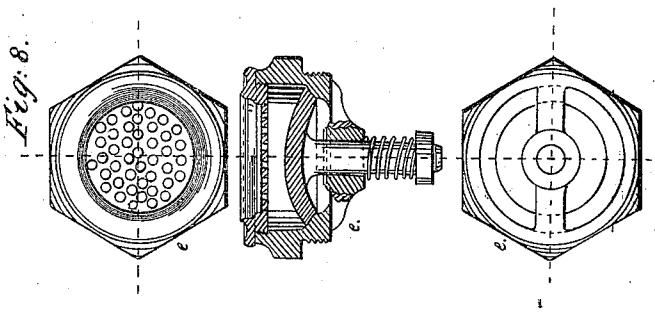

Fig. 7.

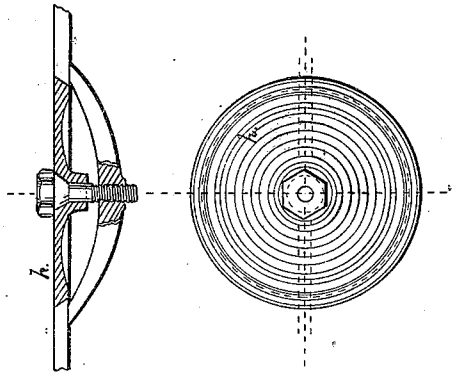

Fig. 6.

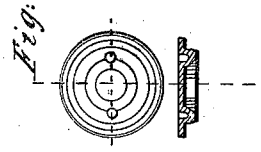

Fig. 5.



Fig. 4.

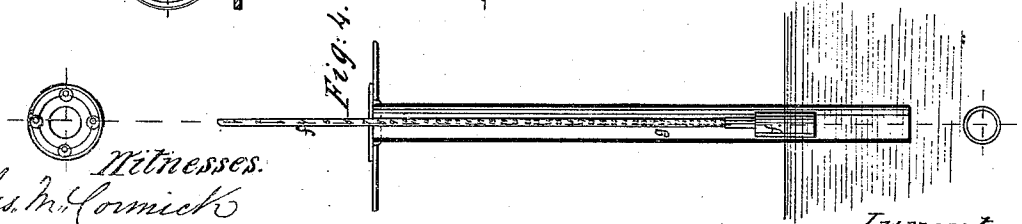

Witnesses.

Jas. M. Cormick

Thos. H. Quinan

Inventor.

Pascal A. Quinan

United States Patent Office.

PASCAL A. QUINAN, OF BALTIMORE, MARYLAND.

Letters Patent No. 97,442, *dated November* 30, 1869.

IMPROVED SAILING-VESSEL FOR STORING AND TRANSPORTING PETROLEUM AND OTHER OILS.

The Schedule referred to in these Letters Patent and making part of the same.

I, PASCAL A. QUINAN, of the city of Baltimore, in the State of Maryland, have invented certain Improvements in a Sailing-Vessel for Stowing and Transporting Petroleum and other Oils, of which the following is a specification.

The objects of my invention are to construct a vessel of iron, to be propelled by the ordinary method, with masts, rigging, and sails, for carrying oil in bulk, thus avoiding the necessity for barrels, separate tanks, or other vessels for holding the oil, and, at the same time, securing the cargo from the danger of combustion, leakage, and other damage incident to the ordinary means of transportation; also, to enable a vessel to carry a much larger amount of oil than could possibly otherwise be the case by the usual mode, and also to economize in the expense of loading and discharging cargo, cooperage, carting, housing, and storing, which is accomplished by my plan of pouring the oil, by means of hose, or other simple device, directly into the ship.

Figure 1 is a longitudinal sectional view.

Figure 2 is a plan view of the deck.

Figure 3 is a transverse section from *a–b*.

Figure 4 is a view of the oil-register.

Figure 5 is the float for the same.

Figure 6 is the screw-cap for deck.

Figure 7 is a man-hole plate.

Figure 8 is the escape-valve.

Figure 9, section of wooden tank, having escape-pipe.

Figure 10, section of iron mast, with escape-valve.

A is the hull, constructed of iron plate riveted to iron ribs, without inside skin, but divided into a convenient number of oil-reservoirs T, see figs. 1 and 2

B are the bilge-pumps, which pass through the deck C, for the purpose of keeping the run or bilge free of water. These pumps have no well, and pass to within a short distance of the floor of the vessel.

The interior of the vessel is divided longitudinally, fore and aft, throughout its entire length, by a partition or bulkhead, D, constructed, preferably, of boiler-plate fastened to angle-iron. By this means the oil is prevented from surging, or shifting from side to side, when the vessel or ship lies over on its side or careens, and the vessel is also greatly strengthened and stiffened by said bulkhead.

A sufficient number of transverse bulkheads, E E E, are also inserted, to divide the interior into separate compartments, for carrying different kinds of oil and better stowage. All of the said compartments are intended to be perfectly tight, so that one should not be affected by a leak in another.

F is a fresh-water tank or compartment, just above the kelson amidships, with a roof or tight cover of iron, and contains the water for the vessel's use, and communicates with the deck above by a pipe, *a*, intended for a pump.

Above said water-tank, in the space marked S, provisions are stored, with a hatchway, *b*, for access to the same.

The deck of this iron vessel is perfectly tight, having no communication with the oil save by circular holes *c*, each about three inches in diameter, and leading into the oil-compartments below, and each filled with a screw-cap, fig. 6, which will be removed, when necessary to pump oil in or out.

To allow for the escape of gas, each oil-compartment is fitted with an escape-pipe, or, preferably, each mast, if of wood, is furnished with such escape-pipe *d*, or each mast, if of iron, may be tubular, and serve as such escape-pipe.

To prevent waste and deterioration, each escape-pipe or iron mast has a valve, *e*, fitted in, from twenty to thirty feet, or other convenient distance above the deck.

Each compartment is fitted with a floating register, *f*, see figs. 4 and 5, passing through a suitable pipe, *g*, fig. 4, and having a graduated scale showing the exact height of the oil in each reservoir.

For the purposes of repairs and cleaning the different reservoirs, there are fitted man-hole plates *h*, perfectly water and oil-tight.

It is well known that the coal-oil of commerce, of 110° Fahrenheit standard fire-test, cannot ignite except by the actual presence of flame, when heated to that degree; hence there cannot be danger of combustion, save from such contact, and such contact cannot occur in this sailing oil-vessel, as no communication is allowed with said oil, nor can the inflammable oil or gas come into contact with the flame, as is sometimes the case in ordinary wooden and other vessels, by the permeation of the escaping gas, or by the incautious use of candles, lamps, or other lighted matter, in the hold, cabin, or other places into which the gas has flowed.

Should the vessel not be full of oil, if desired, water can be admitted, upon which the oil, from its less specific gravity, will float, and the oil can be pumped out at pleasure.

Should the vessel leak, no harm can ensue to the oil, an admixture of it with water being impossible, and the water can be pumped out, as indicated. The register showing the actual height of the oil in the ship, and its capacity, and that of each compartment being accurately known, the real amount of oil can, by simple calculation, easily be ascertained.

The advantages of my improvements are as follows:

First. The cost of constructing my safety iron transport, or sailing oil-vessel, is less than for constructing

one on the ordinary plan, owing to the absence of interior decks and ceilings, while my oil-vessel can easily be adapted to the ordinary purposes of transportation;

Second. The entire cost of the barrels is saved by my plan. As each barrel costs from two to three dollars, in a small vessel of fifteen hundred barrels (or sixty thousand gallons) stowage, at least four thousand dollars would be saved in this single item alone, besides allowing about thirty per cent. more carrying capacity, thus obviating objections that may well be urged against any plan of separate tanks in the hold of a ship, which latter plan necessitates great additional expense, besides loss of room; and

Third. The danger of accidental fire is rendered nearly, if not quite impossible, thus lessening rates of insurance, great loss, &c.

I claim, as my invention—

1. The combination of the hull A, deck C, fore and aft vertical bulkhead D, transverse bulkheads E E E, with the water-reservoir F, provision-hold S, hatchway *b*, fresh-water pump *a*, all constructed and arranged, and for the purpose described.

2. The combination of the oil-reservoirs T with the bilge-pumps B, floating register *f*, register-pipe *g*, the circular holes *c*, with the screw-caps *c*, with the hull A and deck C, all constructed and arranged, and for the purpose described.

3. The escape-pipe *d* and valve *e*, as fitted to mast, with valve *e* as screwed into tubular iron mast, all constructed and arranged, and for the purpose described.

4. The safety iron transport, or sailing oil-vessel, with the parts A B C D E F S T *a b c d e f g h*, all combined, arranged, and constructed substantially as and for the purpose described.

PASCAL A. QUINAN.

Witnesses:

JAS. MCCORMICK,

FRANCIS B. CAPRON.