Sept. 19, 1967 A. M. LEWIS 3,342,164

ELECTROSTATIC TONER HEAD AND SYSTEM

Filed Nov. 4, 1964 2 Sheets-Sheet 1

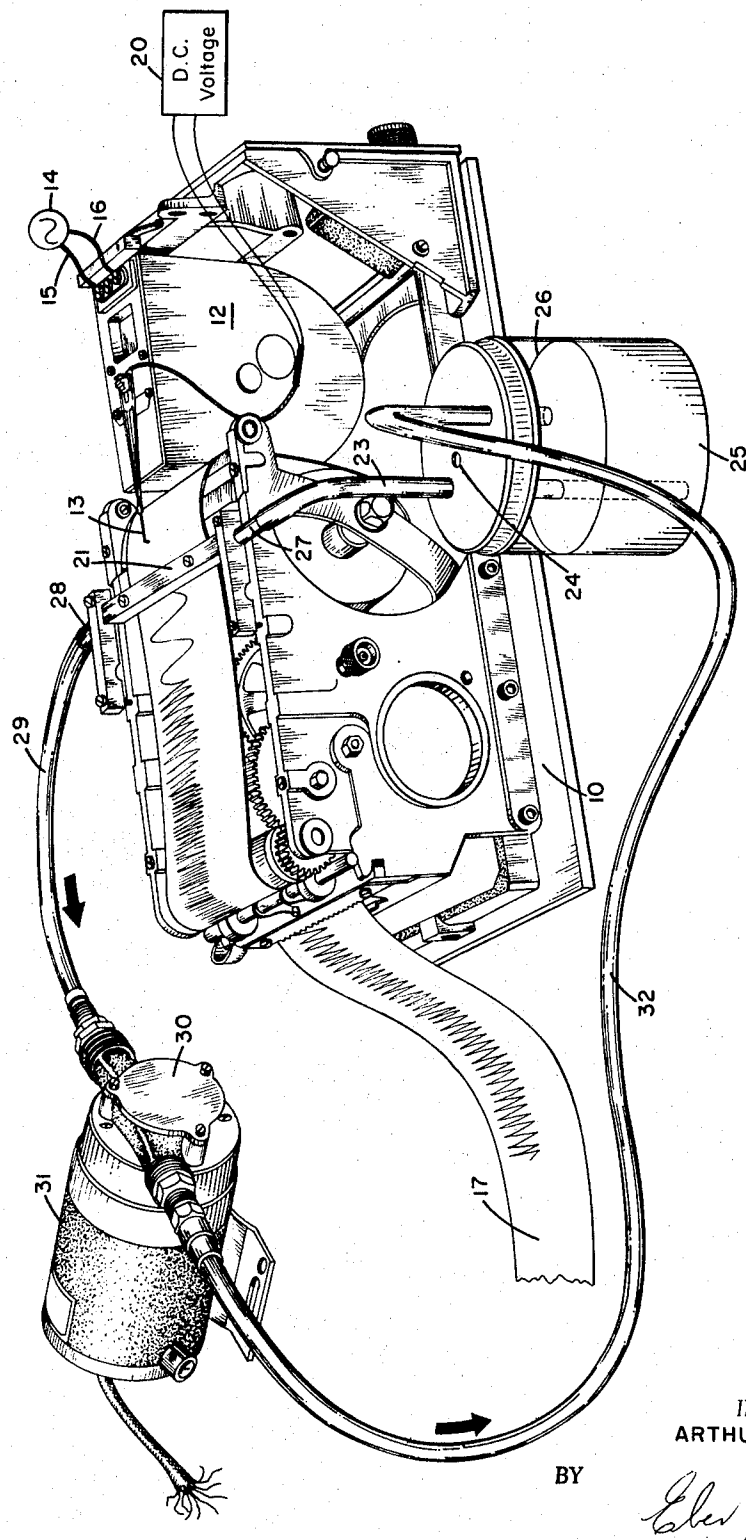

FIG. 1

INVENTOR.
ARTHUR M. LEWIS

BY

Edwin J. Hyde

ATTORNEY

Sept. 19, 1967 A. M. LEWIS 3,342,164

ELECTROSTATIC TONER HEAD AND SYSTEM

Filed Nov. 4, 1964 2 Sheets-Sheet 2

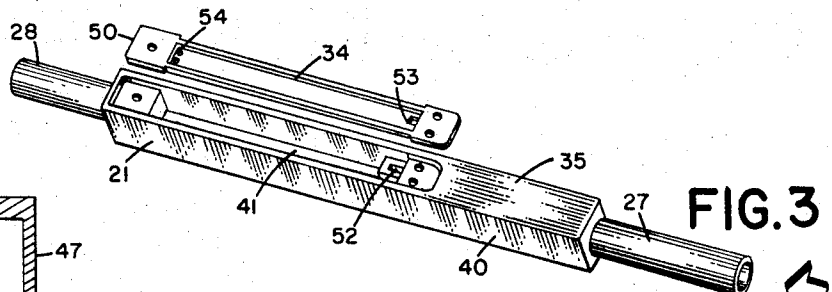

FIG.3

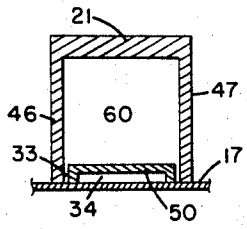

FIG.5

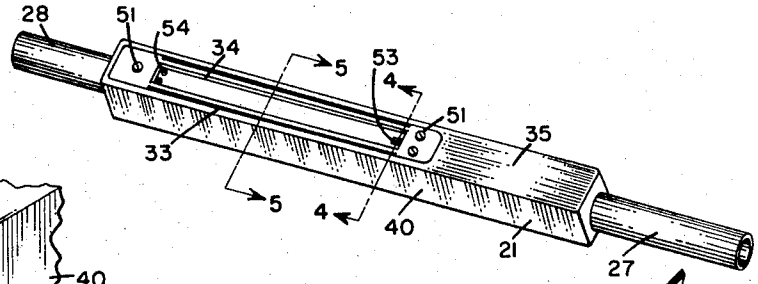

FIG.2

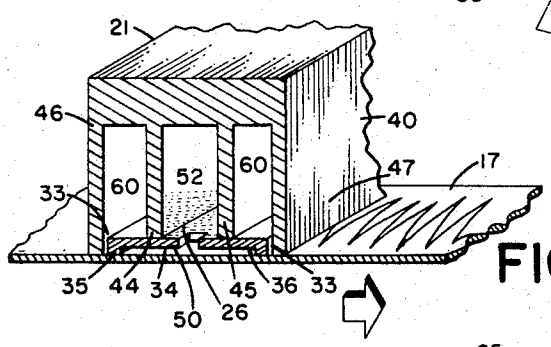

FIG.4

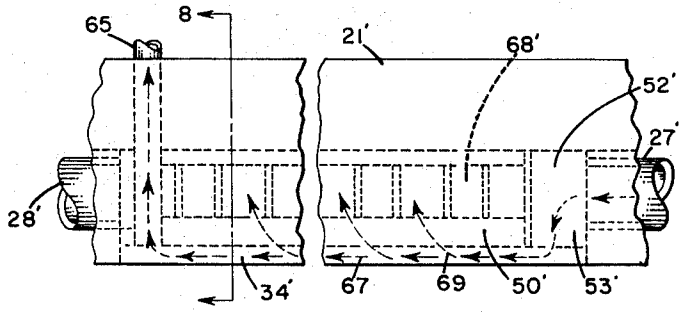

FIG.7

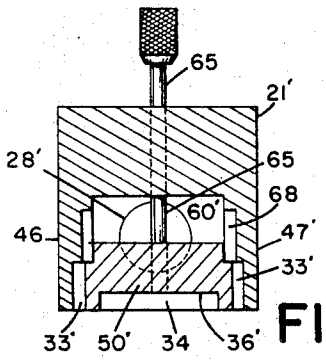

FIG.8

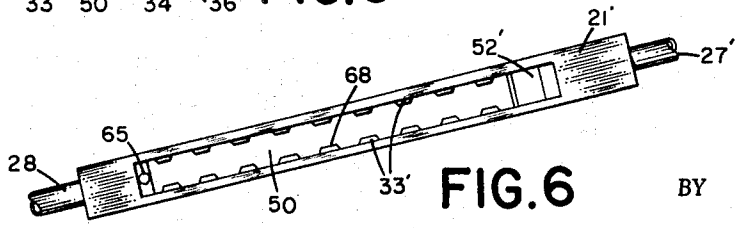

FIG.6

INVENTOR.
ARTHUR M. LEWIS

BY

Eber J. Hyde

ATTORNEY

United States Patent Office 3,342,164
Patented Sept. 19, 1967

3,342,164

ELECTROSTATIC TONER HEAD AND SYSTEM

Arthur M. Lewis, Shaker Heights, Ohio, assignor to Clevite Corporation, a corporation of Ohio

Filed Nov. 4, 1964, Ser. No. 408,894
7 Claims. (Cl. 118—637)

This invention pertains to a system and apparatus for applying liquid toner to a record medium to develop the latent electrostatic image thereon.

Liquid toners have been used to develop latent electrostatic images but have not generally been highly acceptable compared to dry powder developers because of the presence of excess liquid toner on the record and because of the time necessary to dry the record.

Liquid toners, if the extended drying time can be reduced, have some advantages over the dry powder toners.

In the past attempts have been made to reduce the time necessary to dry the liquid toners by squeezing excess liquid off the record with rollers, or by spraying a controlled small amount of liquid toner on the record, followed in both instances by final drying in hot air. While these systems have already achieved some commercial success in devices for copying whole sheets of records, neither system is sufficiently rapid to permit its use in direct writing oscillograph devices.

A direct writing oscillograph should be able to drive the record medium past the recording stylus at selected speeds between very low speeds and very high speeds, and it must develop the latent image sufficiently rapidly that the record becomes almost immediately visible.

It is an object of the present invention to provide an applicator system for applying liquid toner to a record member on which a latent electrostatic image has been recorded, wherein relatively large quantities of toner are applied to the record, and wherein all excess toner is quickly removed after the image has been developed to facilitate rapid drying of the record.

Another object of the invention is to provide a liquid toner system for rapidly developing and substantially drying a moving record chart.

Still another object of the invention is to provide a toner head for applying liquid toner to a rapidly moving electrostatic record chart and for removing the excess liquid toner therefrom.

For a better understanding of the present invention, together with other and further objects thereof, reference is had to the following description taken in connection with the accompanying drawings, and its scope will be pointed out in the appended claims.

The broad term electrostatic recording may embrace xerography, electrographic recording and other systems. The present invention deals with those electrostatic systems wherein a latent or invisible record is made on a record member, which latent image is thereafter developed by the application of toner.

An example of the xerographic process is described in Carlson Patent 2,297,691, issued in 1942. Liquid toner development of a stationary record is described in Patent 3,129,115 issued to Clark et al. in 1964.

An aspect of the present invention lies in the provision of an applicator system and a toner head therefor, for applying liquid toner to a record medium on which a latent electrostatic record has been recorded. A housing forms with the record medium a developer compartment through which quantities of liquid toner are circulated in contact with the surface of the record medium. One or more cleaning nozzles are adjacent the surface of the record medium, and preferably the cleaning nozzles are adjacent the developer compartment, for withdrawing

from the surface of the record medium all excess liquid toner.

With respect to the drawings there is shown in:

FIGURE 1 a view of a direct writing oscillograph embodying the present invention.

FIGURE 2 is a view of the toner head.

FIGURE 3 is a view of the toner head with a front plate removed to show the interior thereof.

FIGURE 4 is a sectional view taken along line 4—4 of FIGURE 2.

FIGURE 5 is a sectional view taken along line 5—5 of FIGURE 2.

FIGURE 6 is a view of a modified type of a toner head with its front plate removed.

FIGURE 7 is a side view of the device shown in FIGURE 6, and

FIGURE 8 is a sectional view taken along line 8—8 of FIGURE 7.

With reference to FIGURE 1 there is shown a direct writing oscillograph mounted on a base **10**, the cover therefor being removed. The oscillograph comprises an electromagnetic device **12** which oscillates a recording stylus **13** in accordance with an electric signal applied from a source **14** to terminals **15**, **16**, as is known in the art. The stylus **13** applies an electrostatic latent image to a moving strip of record medium **17** which is driven at any one of a large number of selected speeds by motor means, gears and the like, the details of which form no part of this invention.

The stylus **13** is connected to a source **20** to provide the recording voltage. For example, the source **20** may apply 500–700 volts D.C. of either negative or positive polarity.

After the latent signal image has been applied to the moving record medium **17** the strip passes under a toner head **21** where liquid toner is applied to the surface of the record medium to make the latent image visible. Liquid toners per se are well known to the art.

The toner head **21** preferably is mounted in a closed liquid circulating system which comprises a reservoir **25** containing the liquid toner **26**. An outlet pipe **23** from the reservoir **25** is connected to the inlet **27** of the toner head **21**, and the outlet **28** of the toner head **21** is connected by hose **29** to the inlet of pump **30** which is driven by motor **31**. The outlet of pump **30** is connected by hose **32** to the reservoir **25** for returning the excess liquid toner and any air picked up by head **21** thereto. A vent **24** is provided in reservoir **25** to vent the excess air which may be pumped into the reservoir along with excess liquid toner.

It is important that the pump **30** be connected to the outlet side **28** of the toner head **21** so that it applies a partial vacuum to the toner head **21**. The record medium **17** is directly under the toner head **21**, and, as shown best by FIGURE 4, the record medium effectively seals several openings **33** and a developer compartment **34** in one face **35** of the toner head **21**. The partial vacuum established by pump **30** pulling the liquid toner **26** through the toner head **21** holds the record member **17** up against the underneath face **35** of the toner head. This effectively seals the openings **33** and **34** therein, and it prevents the liquid toner which is within the toner head from escaping from the toner head.

The toner head is show in detail in FIGURES 2 to 8. In FIGURES 2 and 3 it is upside down compared to its position in the instrument shown in FIGURE 1, and in FIGURE 3 a plate has been removed to show the interior. An advantage of the present system and head is that it will operate in any position.

The toner head **21** is comprised of a housing **40** which is hollow and which has an opening **41** at its face **35**.

Within the housing **40** there is a small chamber **52** formed by walls **44**, **45** spaced from the side walls **46**, **47** of the housing. As shown in FIGURE 4 the walls **44**, **45** do not extend as far down as do the side walls **46**, **47**. A face plate **50** having an opening **53** is secured by screws **51** in the opening **41** so that it encloses the chamber **52** and provides communication with the developer compartment **34**. The face plate **50** has two small openings **54** at its end opposite to the opening **53**. Inlet pipe **27** communicates with chamber **52** so that liquid toner flows through chamber **52**. Opening **53** in plate **50** permits toner fluid in chamber **52** to flow into the developer compartment **34** located between the record medium **17** and the face plate **50**, and the liquid toner flows through the two small openings **54** back into a passageway **60**, and from there it flows out the outlet pipe **28** to the pump **30**. Thus only a very small volume of toner is actually against the surface of the record medium at any given time so that if the supply of paper is exhausted virtually no toner is spilled if the liquid surface in the reservoir is at a level below the head. This avoids a siphon action which otherwise might take place. Because of the cross-sectional area of the compartment **34** and because of the flow of toner through it, the surface of the record medium **17** under the head **21** is in intimate contact with a sufficient volume of continually replaced toner.

Face plate **50** preferably is made of metal and compartment **34** is very shallow so that its side **36** is close to the surface of the record medium **17** while developing the latent image. This closely spaced conducting surface **36** acts as a developing electrode to speed up development.

The face plate **50** almost, but not completely, closes the opening **41** in the face **35** of the toner head **21**, thereby forming with the side walls of the housing one or more long narrow openings or nozzles **33**. Preferably a long narrow opening **33** is located at each side of the developer compartment **34** where toner is applied to the record medium, though it is possible to satisfactorily operate the toner head with only one such slot **33** if it is located to the side of the head toward which the record medium is moving; i.e. to the right hand side in FIGURE 4. Compartment **60** is in communication with these slots **33**, and compartment **60** is connected to the outlet pipe **28** so that pump **30** establishes a negative pressure therein. Excess liquid toner that escapes from the developer compartment **34** is "vaccumed" up into the compartment **60** and is then returned to the reservoir **25** together with any air which leaks in between the walls **46**, **47** and the record medium **17**. This negative pressure or partial vacuum at the slots **33** to either side of the head **21** assures that the record medium will engage the face **35** of the head to minimize liquid leakage from the developer compartment **34**. Thus the partial vacuum in compartment **60** and in the slots **33** serve a dual purpose—to hold the record medium against the face **35** of the head **21** and to "vacuum" up any excess liquid toner.

Holes **54** are deliberately made restrictive to toner flow thereby to establish a pressure differential between compartments **34** and **60**. This pressure differential prevents air from leaking into the developer compartment **34**, and assures that during normal operation the developer compartment **34** will at all times be full of toner liquid.

The developed record is in an essentially dry state as it leaves the head since the liquid toner contacts only one face of the record for an extremely short interval of time and since excess liquid toner is immediately "vacuumed" up from the surface of the record medium. The record is made visible almost immediately, and the oscillograph does not have to provide a long loop in which the record is heated to facilitate drying.

An alternative head is shown in FIGURES 6 to 8. In this embodiment the toner head **21** has an inlet pipe **27'** and an outlet pipe **28'**. Liquid toner and air are pulled out of outlet pipe **28'** by a pump **30** thereby establishing

the essential partial vacuum within the head, and liquid toner is pulled into the inlet pipe **27'**. Additionally a pipe **65** is connected to the pump **30** to circulate the spent liquid toner and return it to the reservoir. The pipe **65** extends through the head **21'** and through the face plate **50'** into the compartment **34'** where the developing process takes place. The compartment **60'** which is formed in the head **21'**, and grooves **68** in the side walls of the head communicate at a number of locations with the slots **33'**. Any excess liquid on the record is "vacuumed" up by slots **33'** and passes through grooves **68** into the compartment **60'** and is then returned through pipe **28'** to the reservoir.

Pipe **65** is connected to the pump **30** through restrictive means which establish the pressure differential between compartments **34'** and **60'**. The restrictive means may merely be a long, small pipe or it may include a throttle valve.

The flow path of the liquid toner, as best shown in FIGURE 7, is from inlet pipe **27'** into compartment **52'**, thence through orifice **53'** into the developer compartment **34'**, and then out through pipe **65** to the pump **30**, as shown by the arrows **67**. Any liquid toner which escapes from the developer compartment **34'** is "vacuumed" up by nozzles **33'** and passes through grooves **68** into compartment **60'**, together with any air which flows into the head between the record **17** and the side walls **46'**, **47'** (as shown by arrows **69**), and the mixture is exhausted out through pipe **28'** by pump **30** and is returned to the reservoir.

While there have been described what are at present considered to be the preferred embodiments of this invention, it will be obvious to those skilled in the art that various changes and modifications may be made therein without departing from the invention, and it is, therefore, aimed in the appended claims to cover all such changes and modifications as fall within the true spirit and scope of the invention.

I claim:

1. An applicator system for applying liquid toner to a record medium on which a latent electrostatic record has been applied, comprising, a housing forming with said record medium a substantially closed developer compartment, circulator means for circulating liquid toner through said compartment and against a surface of said record medium to develop said latent record, said circulator means including a reservoir for said liquid toner, means connecting said reservoir to said housing in a closed liquid circuit, means for circulating said toner through said closed circuit and for applying a partial vacuum to said compartment, air suction means including cleaning nozzle means separated from said developer compartment and within said housing and adjacent the surface of said record medium for withdrawing from the surface of said record medium excess liquid toner, and means connecting said air suction means to said circulator means for returning said air and said excess liquid toner to said reservoir.

2. An applicator system for applying liquid toner to a record medium on which a latent electrostatic record has been applied thereby to develop said record, comprising, in combination, a housing, means for moving said record medium in engagement with said housing to establish a substantially closed developer compartment, a reservoir of liquid toner connected to said compartment, pump means connected to said housing and also connected to said reservoir for withdrawing said liquid toner from said compartment and for returning it to said reservoir and thereby establishing in said compartment a partial vacuum which tends to hold said record medium against said housing, and air suction means including cleaning nozzle means operated below ambient pressure located adjacent the surface of said record medium and within said housing for withdrawing from the surface of said record medium excess liquid toner, said cleaning nozzle means being separated from said developer compart-

ment and being to the side of said compartment toward which said record medium moves after it has been developed.

3. An applicator system for applying liquid toner to a record medium according to claim 2, further characterized by means connecting said air suction means to said liquid pump means whereby said excess toner and air is returned to said reservoir.

4. An applicator system for applying liquid toner to a record medium according to claim 2, further characterized by cleaning nozzle means adjacent the surface of said record medium and adjacent both sides of said compartment.

5. A toner head for applying liquid toner to a record medium on which a latent electrostatic record has been applied, comprising, a housing having an opening adapted to be closed by said record medium to establish a developer compartment, means admitting liquid toner to said developer compartment, means for withdrawing said liquid toner from said developer compartment thereby establishing within said compartment pressure below ambient and air suction means including a nozzle forming part of said housing, said nozzle being separated from said developer compartment and within said housing and adjacent said record medium for withdrawing from said record medium excess liquid toner.

6. A toner head as set forth in claim 5 further characterized by said means for withdrawing said liquid toner and said air suction means for withdrawing said excess liquid toner being connected to the same vacuum pump.

7. A toner system for applying liquid toner to a moving record medium on which a latent electrostatic record has been applied, comprising, a housing forming with said record medium a substantially closed developer compartment, means for moving liquid toner through said housing and in engagement with said record medium to develop the latent image thereon, and cleaning nozzle means separated from said developer compartment and within said housing and adjacent said record medium at a location where said latent image has been developed, said nozzle operating below ambient pressure at the surface of said record medium to remove excess liquid toner therefrom by "vacuuming" up the excess liquid.

References Cited

UNITED STATES PATENTS

2,242,182	5/1941	McCann	118—415 X
3,027,821	4/1962	Wright	118—410 X
3,038,442	6/1962	Jones et al.	118—637
3,081,687	3/1963	Takats	95—89
3,122,453	2/1964	Montgomery	118—637
3,176,653	4/1965	Hansen	118—637
3,196,832	7/1965	Zin	118—637
3,238,921	3/1966	Engelstad et al.	118—637
3,277,493	10/1966	Fyler.	

FOREIGN PATENTS

649,949	10/1962	Canada.

CHARLES A. WILLMUTH, *Primary Examiner.*

PETER FELDMAN, *Assistant Examiner.*