March 2, 1926. 1,575,056

T. G. JOHNSON

CHIMNEY

Filed Jan. 7, 1924 2 Sheets-Sheet 1

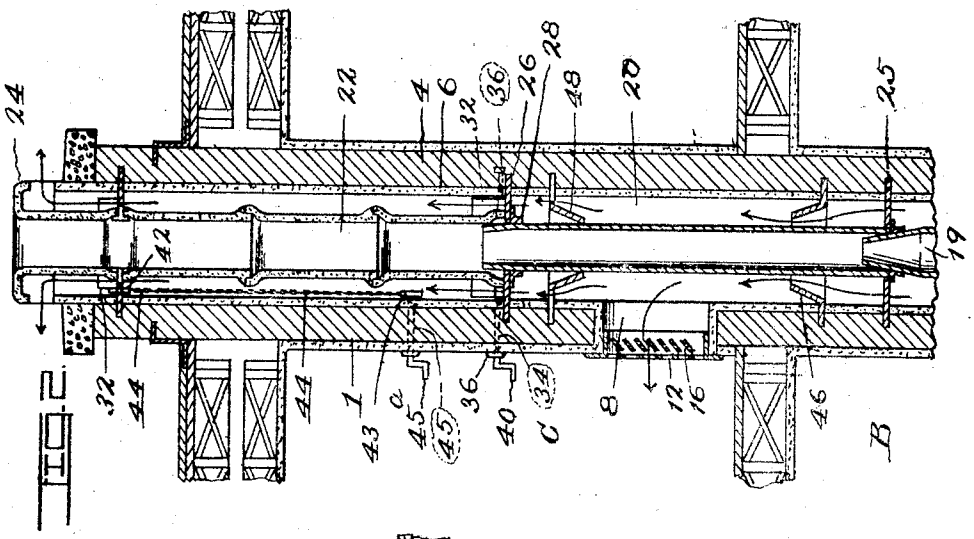

Fig. 2.

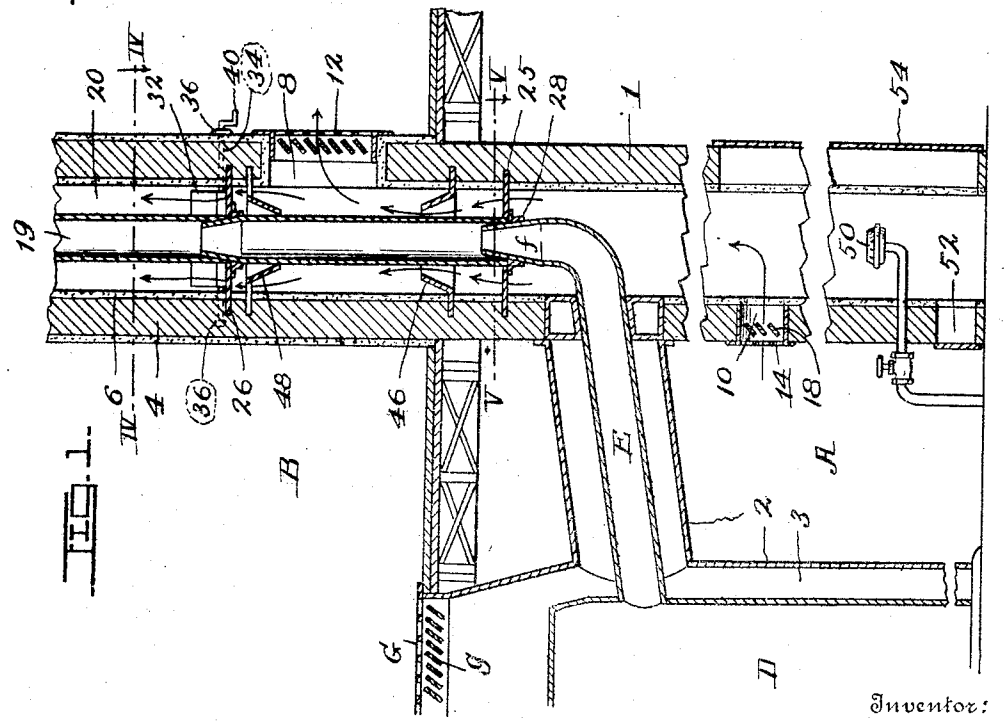

Fig. 1.

Inventor:
Theodore G. Johnson,

Witness:
Fred C. Fischer.

By F. G. Fischer,
Attorney.

March 2, 1926. 1,575,056

T. G. JOHNSON

CHIMNEY

Filed Jan. 7, 1924 2 Sheets-Sheet 2

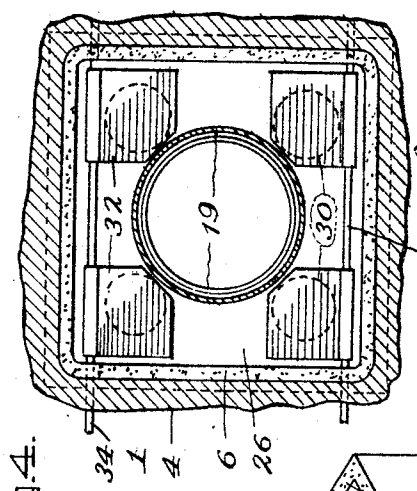

FIG. 4.

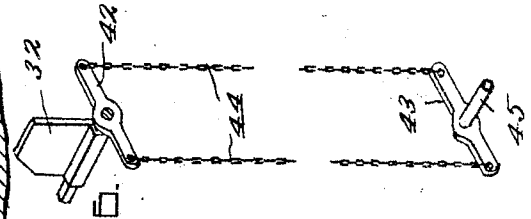

FIG. 6.

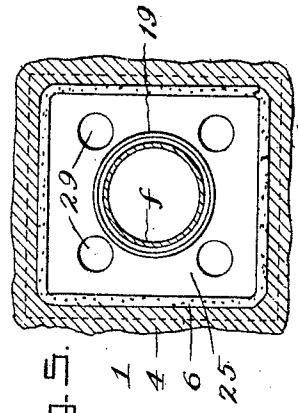

FIG. 5.

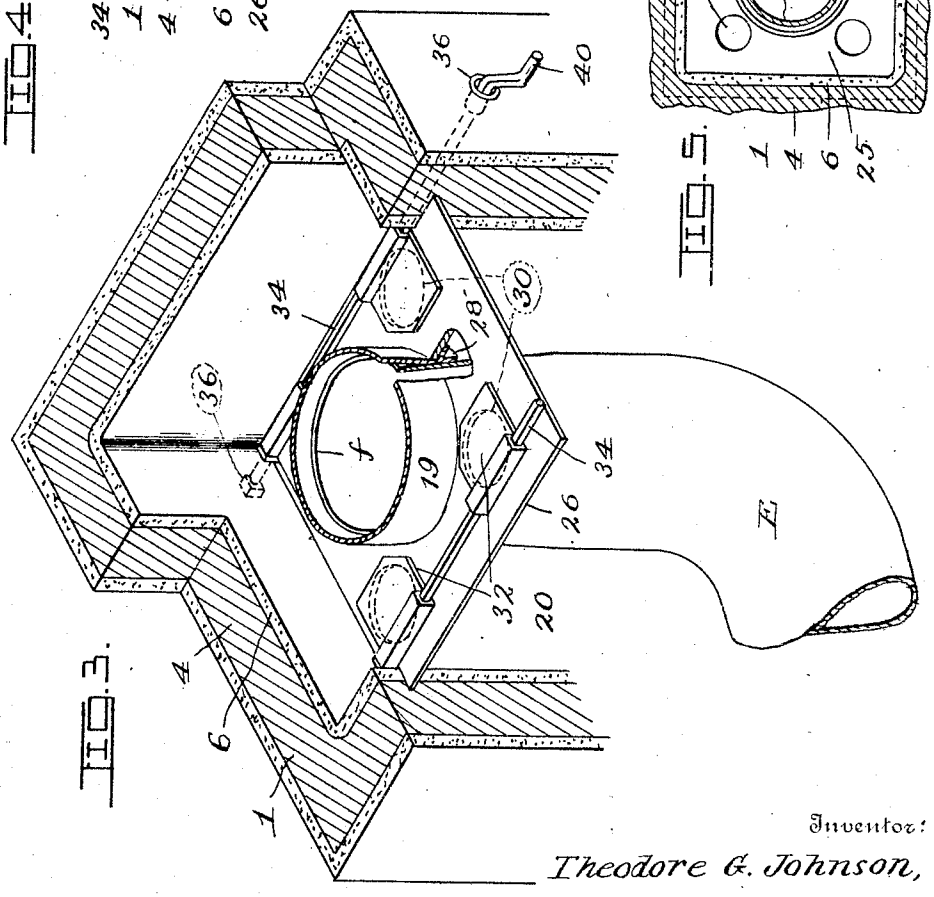

FIG. 3.

Inventor:
Theodore G. Johnson,

Witness:
Fred G. Fischer.

By F. G. Fischer,

Attorney.

Patented Mar. 2, 1926. 1,575,056

UNITED STATES PATENT OFFICE.

THEODORE G. JOHNSON, OF KANSAS CITY, MISSOURI.

CHIMNEY.

Application filed January 7, 1924. Serial No. 684,783.

To all whom it may concern:

Be it known that I, THEODORE G. JOHNSON, a citizen of the United States, residing at Kansas City, in the county of Jackson and State of Missouri, have invented certain new and useful Improvements in Chimneys, of which the following is a specification.

My invention relates to improvements in chimneys and one object is to utilize a large percentage of heat which has heretofore gone to waste by radiation from the sides of and by escape from the top of the chimney, for the purpose of heating the rooms in the building equipped with said chimney.

A further object is to provide controlling means whereby the heat from the chimney may be distributed in substantially a uniform manner to the rooms adjoining the chimney on different floors, or concentrated to a large extent in any one of said rooms.

Another object is to utilize the chimney as a ventilator in the summer season, to the end that warm air may be drawn from the adjoining rooms and a good circulation of air created to reduce the temperature.

Other objects will hereinafter appear, and in order that the invention may be fully understood reference will now be had to the accompanying drawings, in which:

Fig. 1 is a broken vertical sectional view of the chimney and a portion of the basement and first floor of the building.

Fig. 2 is a vertical sectional view of a continuation of the chimney and a portion of the first and second floors of the building.

Fig. 3 is an enlarged fragmentary perspective view of a portion of the chimney.

Fig. 4 is an enlarged broken horizontal section on line IV—IV of Fig. 1.

Fig. 5 is an enlarged broken horizontal section on line V—V of Fig. 1.

Fig. 6 is a detail of the topmost valves and mechanism for actuating the same.

Referring now to the different parts, A designates a portion of the basement, B a portion of the first floor, and C a portion of the second floor of a building equipped with the chimney 1, which is preferably located between two adjoining rooms as shown by Figs. 1 and 2, so that the heat radiated from the four walls of the chimney may be utilized for heating said rooms instead of a portion going to waste as would be the case if the chimney were located outside of the building.

D designates a furnace or other heater having a pipe E connected thereto for carrying off the smoke and other products of combustion of the chimney 1.

2 designates a jacket of suitable material surrounding all but the doors of the furnace D and also a large portion of the pipe E to form a warm air chamber 3 in which the heat radiated from the furnace E and the pipe F is collected and delivered to the first floor B through a suitable register G, provided with the usual adjustable louvers *g* for controlling the passage of air through said register G.

4 designates the brick or other masonry walls of the chimney 1. Said walls 4 are preferably lined with tile 6 and have lateral openings 8 leading to the floors B and C, and a lateral fresh air opening 10 communicating with the basement A. The openings 8 and 10 are provided with registers 12 and 14 having the usual adjustable louvers 16 and 18, respectively, for controlling the passage of air through said registers, which may be of any well-known form.

19 designates a smoke stack arranged centrally within the chimney 1 and communicating with the upturned end of an elbow *f* connected to the pipe E. Said smoke stack 19 is of less diameter than the interior of the chimney 1 in order to leave an intervening air shaft 20 which extends preferably throughout the length of said chimney.

The greater portion of the smoke stack 19 consists, preferably, of sheet metal or other heat radiating sections having slip joint connections; the uppermost sections being surmounted by nonrusting tubular tiles 22, the topmost one of which has a marginal flange 24, projecting over the upper end of the air shaft 20.

The air shaft 20 is divided into a plurality of chambers by horizontal division plates 25 and 26, the margins of which are embedded in the chimney walls 4. Said division plates 25 and 26 reinforce the chimney walls 4 and have collars 28 into which the smoke stack 19 snugly fits and whereby it is held centrally within the chimney 1. The division plates 25 and 26 have ports 29 and 30, respectively through which latter the passage of air is controlled by valves 32 preferably arranged in pairs as shown by Figs. 3 and 4. Each pair of valves 32 is fixedly mounted upon a shaft 34 journaled in bearings 36, embedded in the chimney walls 4. All but the topmost shafts 34 are provided

with cranks 40 whereby they may be rocked to open or close the respective valve 32. The shafts of the topmost valves 32 are provided with levers 42 having depending chains 44 connected to levers 43 mounted on shafts 45 operable from the upper floor C by cranks 45a.

46 designates upwardly extending conical baffles for concentrating the air in the shaft 20 around the smoke stack 19, which extends centrally through said baffles, and 48 designates downwardly extending conical baffles for directing a portion of the heated air towards the registers 12.

50 designates a gas or other suitable burner arranged in the lower portion of the chimney 1 for accelerating the draft therein when desired.

52 designates a clean-out door in the lower portion of the chimney 1, and 54 a large door also at the lower portion of said chimney through which access may be had thereto when installing the smoke stack 19.

In practice it is apparent that when a fire is built in the furnace D the smoke and other products of combustion in ascending through the pipe E and smoke stack 19, will through radiation, heat the warm air chamber 3 and the air shaft 20, which latter is supplied with fresh air from the basement A through the register 14. As the warm air ascends in the shaft 20 it is heated by being directed against the smoke stack 19 by the baffles 46 and a portion of the heated air is directed towards the registers 12 by the baffles 48. By proper manipulation of the registers 12 and the valves 32, the heated air within the air shaft 20 may be either concentrated in any one room adjoining the chimney 1 or discharged in substantially a uniform manner throughout all of said rooms as preferred. As the warm air escapes from the top of the air shaft 20 it is deflected by the flange 24 away from the vent at the upper end of the smoke stack 19, and hence will not interfere with the draft thereof by causing conflicting air currents.

From the foregoing description it is apparent that I have produced a chimney embodying the advantages above pointed out, and while I have shown and described the preferred construction, combination and arrangement of parts, I reserve the right to make such changes as properly fall within the spirit and scope of the invention as claimed.

Having thus described my invention, what I claim and desire to secure by Letters Patent, is:

In combination a chimney having openings in its side for the passage of air, a smoke stack arranged within said chimney and spaced from the inner surface thereof to leave an intervening air shaft which communicates with said openings in the sides of the chimney and reversely disposed conical baffles extending around the smoke stack in the air shaft for directing the air therein toward and away from the smoke stack.

In testimony whereof I affix my signature.

THEODORE G. JOHNSON.