No. 35,640. PATENTED JUNE 17, 1862.

W. W. VIRDIN.

ROTARY ENGINE.

2 SHEETS—SHEET 1.

Fig. 2

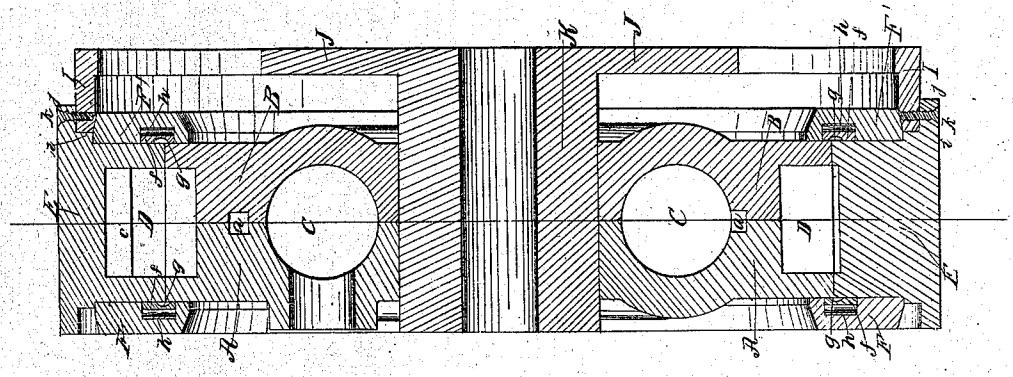

Fig. 1

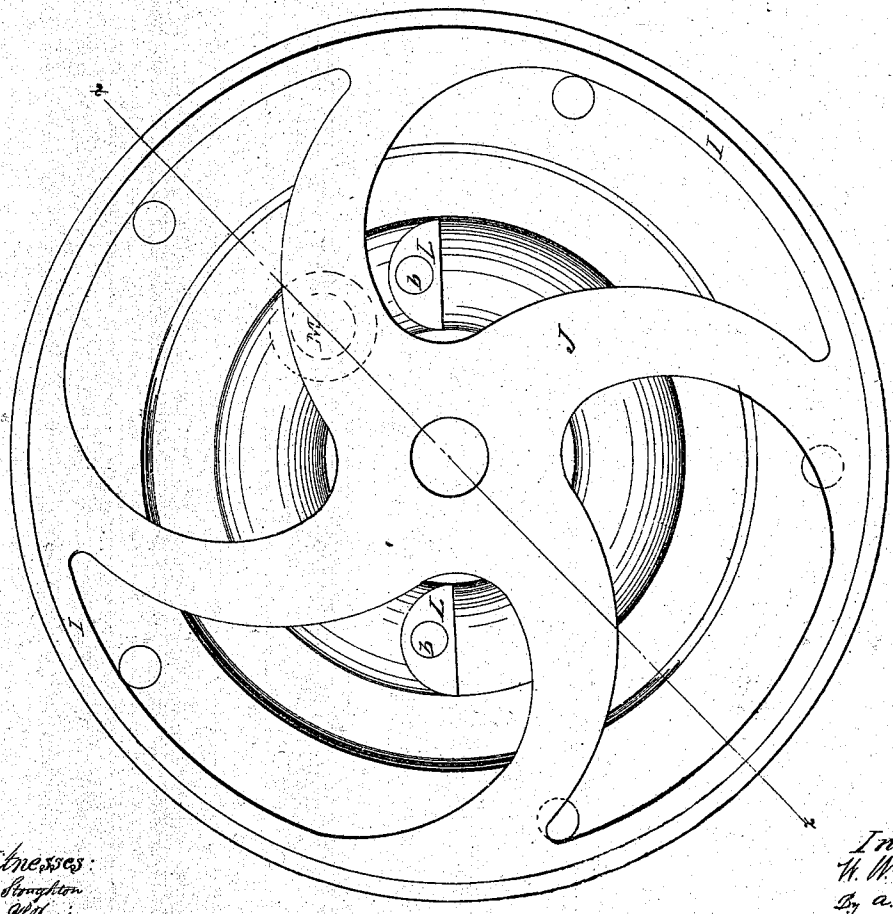

Witnesses:
A. B. Stoughton
Harry W. Frick

Inventor:
W. W. Virdin
By A. B. Little

THE ECKERT LITHOGRAPHING CO., WASHINGTON, D. C.

No. 35,640. PATENTED JUNE 17, 1862.

W. W. VIRDIN.

ROTARY ENGINE.

2 SHEETS—SHEET 2.

Fig. 4

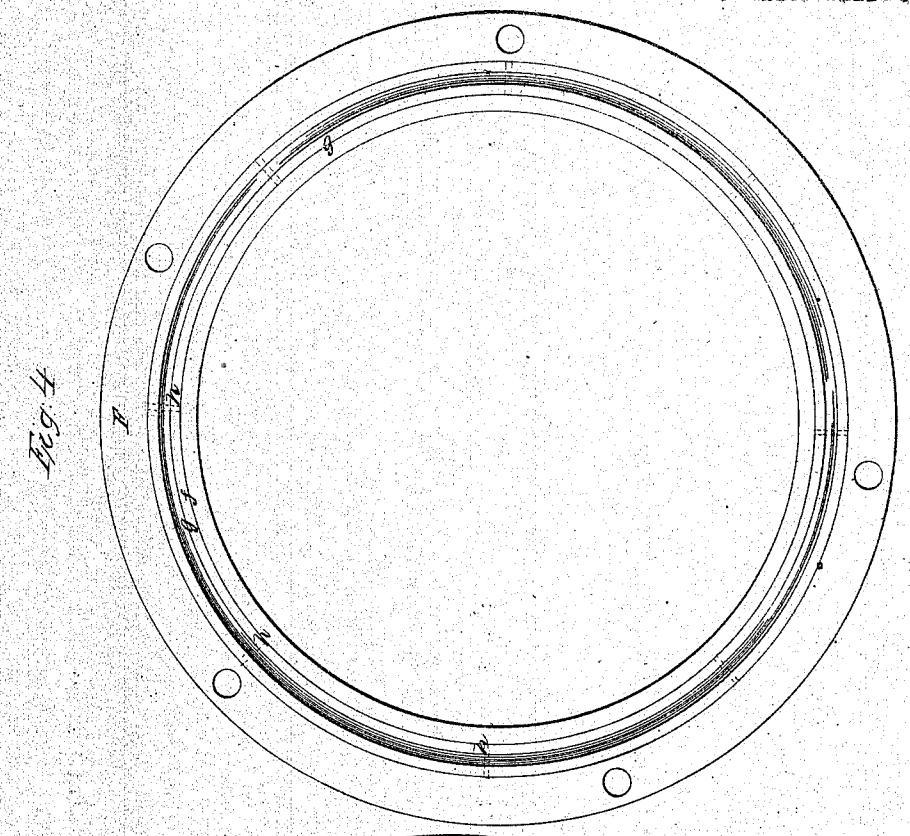

Fig. 3

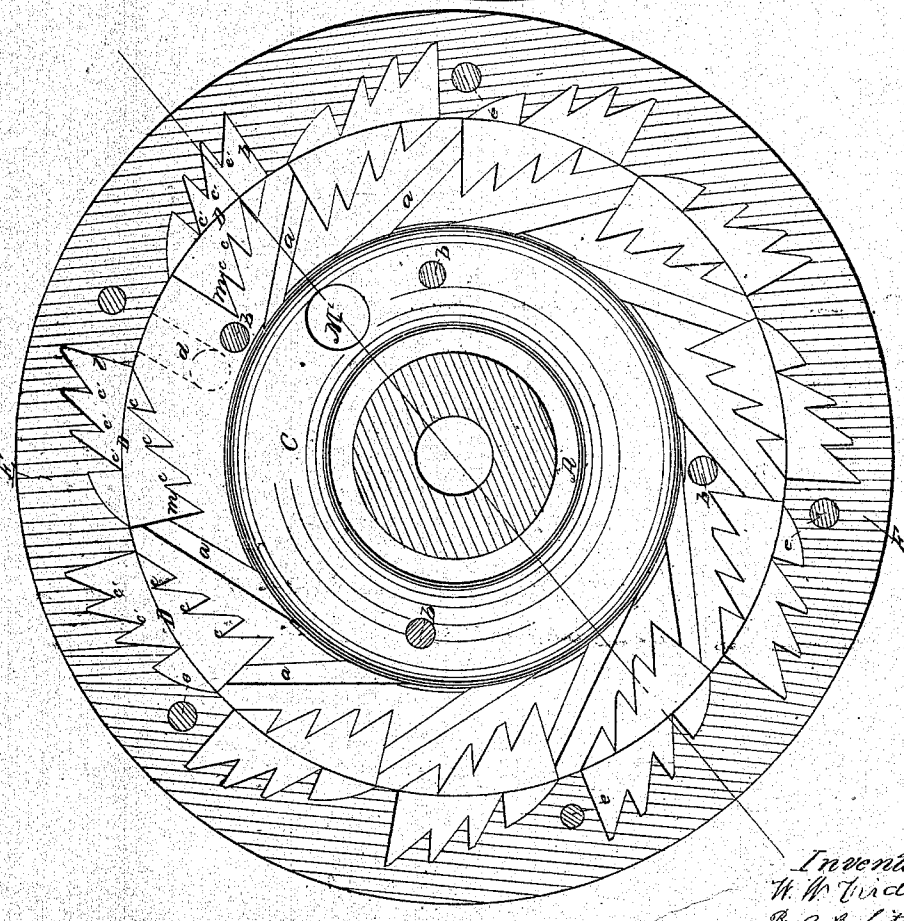

Witnesses:
A. B. Stoughton
Henry W. Frei

Inventor:
W. W. Virdin
By A. B. Little

UNITED STATES PATENT OFFICE.

W. W. VIRDIN, OF BALTIMORE, MARYLAND.

IMPROVED ROTARY ENGINE.

Specification forming part of Letters Patent No. **35,640**, dated June 17, 1862.

To all whom it may concern:

Be it known that I, W. W. VIRDIN, of Baltimore, in the State of Maryland, have invented certain new and useful Improvements in Rotary Engines; and I do hereby declare that the following is a description thereof in terms which now appear to me to be sufficiently full, clear, and exact, reference being had to the annexed drawings, making a part of this specification, in which—

Figure 1 is a front elevation; Fig. 2, a section through the lines *x x* of Fig. 1 and *y y* of Fig. 3; Fig. 3, an inner face view of one of the sections of the drum, and Fig. 4 a view of the packing-ring.

To enable others skilled in the art to make and use my invention, I will proceed to describe its construction and operation.

The drum, which I shall first describe as being stationary, while the cylindrical case inclosing it is rotatory, is cast in two sections, A and B, each of which contains one half of the annular steam-chest C and one half of the steam-passages *a*, except as will be hereinafter stated. Each section is also cast with one-fourth of the chambers D and one-fourth of the pistons *c* and *m*, so that when they are bolted together by the bolts *b b* the drum embraces one half of the said chambers and pistons. The cylindrical case E contains the other half of chambers D and the pistons *c'* and *l*. The annular or ring steam-chest C lies near to and surrounds the eye of the machine, and the outer walls of the steam-passages *a* are as nearly tangential to the outer wall of the steam-chest as is practicable.

In the section A of the drum is cast the exhaust-pipe *d*, (shown in dotted lines,) which is perpendicular to the axis of the engine for a short distance, when it turns off and out of the side parallel with the said axis. To accommodate this pipe the periphery of the drum at that point is cast with a more extended surface or segment, but still not sufficiently large to accommodate a part of one of the steam-passages *a*. This, however, is provided for by casting the section B with a corresponding surface and locating therein the whole of one of the steam-passages *a*, which is of greater depth than the others, so as to give it the same capacity. The drum and the cylindrical case E are placed the one within the other, and there confined by means of the annular rings F and F' and bolts *e*. These rings are grooved on their inner surfaces to receive the annular packing-rings *f*, which are also grooved on their inner surfaces, as seen at *g*, at the point directly over the joint made by the drum and cylindrical case, and they are pressed against the surfaces of the drum and case by means of the springs *h*, the ends of which are seen in dotted lines in Fig. 4.

In the groove *i*, formed between the annular ring F' and the flange *j* of the cylindrical case E, is secured by means of bolts or screws *k* the rim I of the wheel J, whose hub K passes through the eye of the machine.

The operation of the engine is as follows: It having been attached to its foundation by means of the lugs L, projecting from both sides of the drum, steam is admitted to the steam-chest C through the steam-passage or induction-port M, from whence it enters the chamber D through the steam-passages *a*, arranged at equal distances around the whole periphery of the drum, except at that point where the exhaust-pipe *d* is located. These steam passages *a*, being nearly or quite tangential to the outer wall of the steam-chest C, steam is introduced into chambers D, so as to act against the pistons *l* in the most direct line practicable in a rotary engine, and consequently in the most efficient manner. The passage *a* in the section B of the drum corresponding with or over the exhaust-pipe is designed to be closed when the exhaust is open; otherwise, whenever the exhaust takes place the steam passing through this passage *a* would blow directly off. I contemplate, however, the use of compressed air or other non-condensing fluid as a motive power, and when this is the agent employed the exhaust-pipe may be partly or wholly closed, and the passage *a* over it left open, when the fluid will operate equally all around the periphery of the drum. In other words, when steam or any other condensing-fluid is worked, the channel *a* opposite the exhaust-port is to be closed. When working air or any other non-condensing fluid, the exhaust-pipe may be partly o wholly closed, and the opposite passage *a* b left open.

The arrangement of the chambers D enables me to use steam expansively to great advantage, since my engine in this respect acts upon the principle of the cylinder-engine, all of the abrupt walls or abutments *l* of the chambers D corresponding to the piston-head, while the walls or abutments *m* act in the capacity of the cylinder-head.

The packing-rings *f* are placed loosely in their channels in the annular ring F, and they are grooved, as at *g*, so as to admit of the springs *h* pressing their inner edge upon the face of the drum, and thus compensating for any wear that may arise from friction. If preferred, the plane surfaces of these rings may be made convex, fitting into grooves in the drum and cylindrical case; and they may be made in sections, if this mode affords a better packing.

The wheel J being secured to the revolving cylindrical case and the hub K forming the axis of the engine, it will be perceived that when the shaft bearing the pulley for communicating power is secured within the said hub we have the force expended by the steam applied in the most economical manner.

The belt may, however, pass over the cylindrical case; or buckets may be attached to the periphery of the cylindrical case, when my rotary engine may be used as a ship's propeller, revolving either in a line parallel to the line of progress, like an ordinary paddle-wheel, or transverse to that line when the cylindrical case and drum form the amid-ship part of such a vessel, as is shown in my application for a patent filed in the Patent Office November 9, 1849, and the buckets are arranged spirally. When my engine is so used, the wheel J and hub K are dispensed with, that a passage may be provided from fore to aft.

Of course the drum of my engine may be made to rotate instead of the cylindrical case, by fixing the latter to the bed or frame and introducing the steam into the annular chamber C through a hollow shaft.

Having thus described my invention and indicated the manner in which it operates, what I claim therein as new, and desire to secure by Letters Patent of the United States, is—

1. The chambers D, when formed partly in the cylindrical case and partly in the drum and when operating in the manner substantially as described.

2. The peculiar arrangement of the steam-passages *a* with respect to the annular or ring steam-chest C and abutments or pistons *l* and *m*, substantially as specified.

3. The grooved annular packing-ring *f*, as and for the purpose set forth.

4. The wheel J, when constructed and operating substantially as specified.

W. W. VIRDIN.

Witnesses:
N. ROBINSON
J. S. BROWN.