Oct. 21, 1941. M. J. BURKE 2,259,551

EXERCISING HORSE

Filed April 15, 1941 3 Sheets-Sheet 1

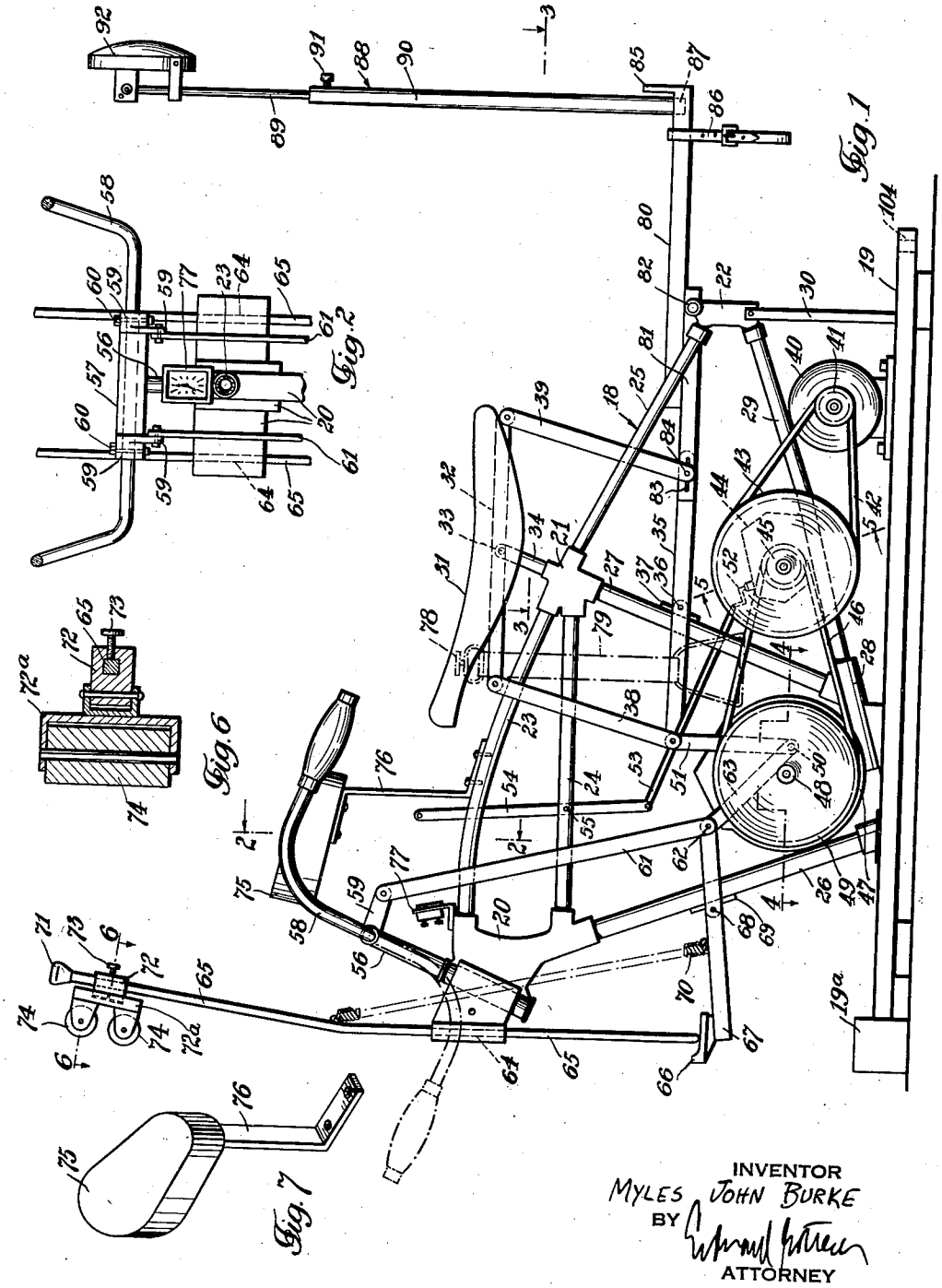

Fig. 1

Fig. 2

Fig. 6

Fig. 7

INVENTOR
MYLES JOHN BURKE
BY
ATTORNEY

Oct. 21, 1941. M. J. BURKE 2,259,551

EXERCISING HORSE

Filed April 15, 1941 3 Sheets-Sheet 2

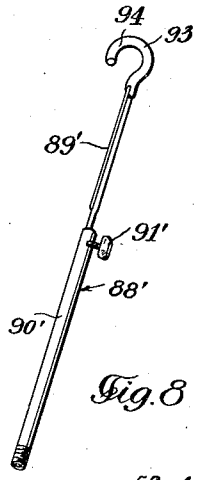

Fig. 8

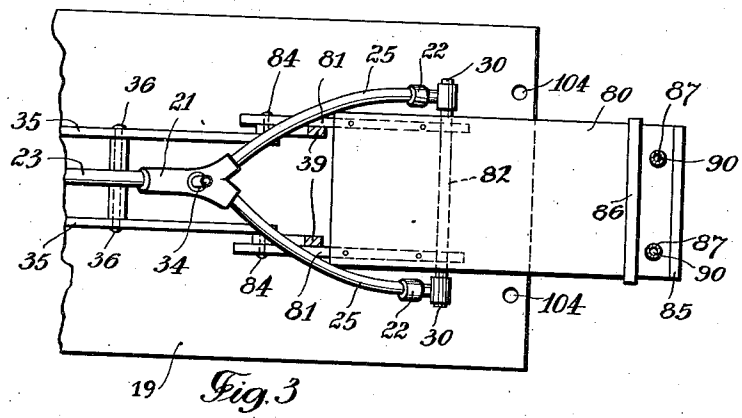

Fig. 3

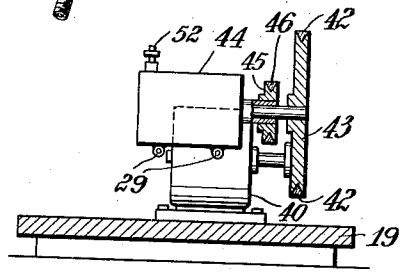

Fig. 5

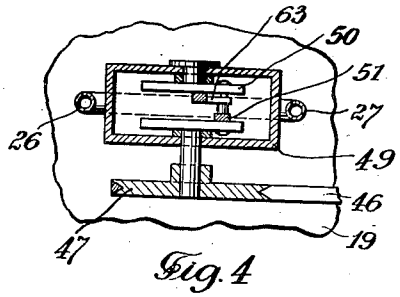

Fig. 4

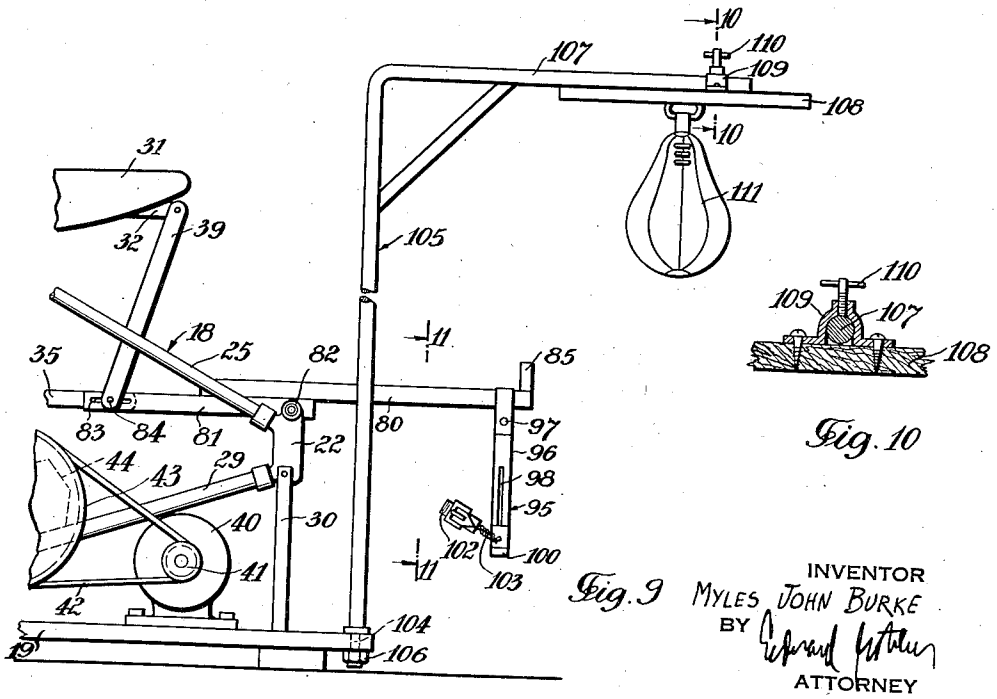

Fig. 9

Fig. 10

INVENTOR
MYLES JOHN BURKE
BY
ATTORNEY

Oct. 21, 1941. M. J. BURKE 2,259,551

EXERCISING HORSE

Filed April. 15, 1941 3 Sheets-Sheet 3

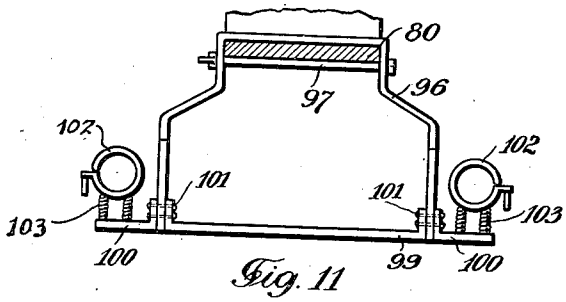

Fig. 11

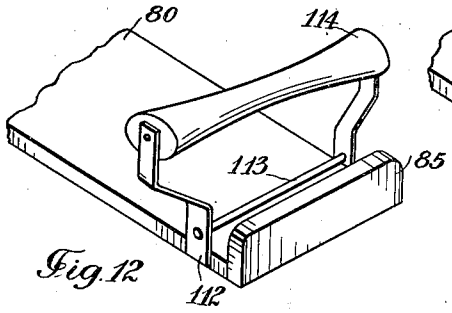

Fig. 12

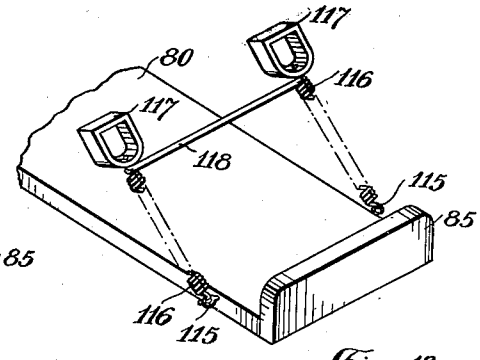

Fig. 13

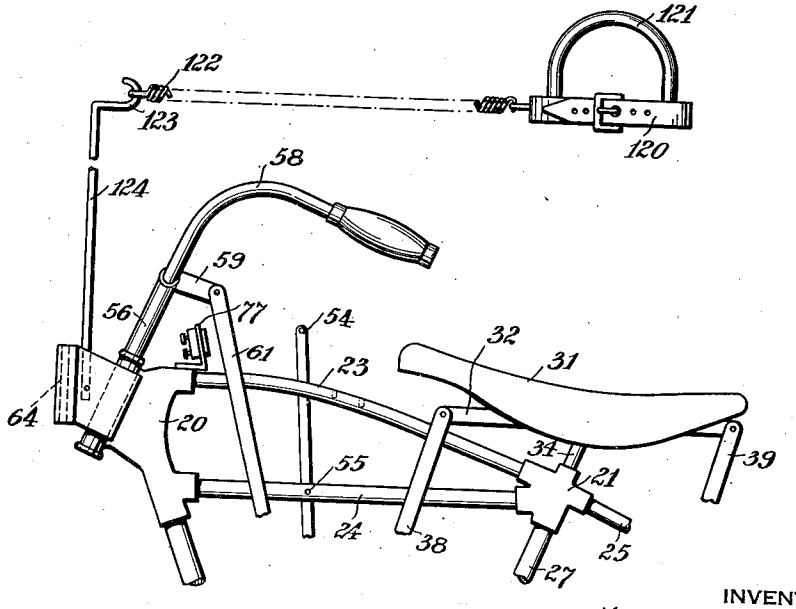

Fig. 14

INVENTOR
MYLES JOHN BURKE
BY
ATTORNEY

Patented Oct. 21, 1941 2,259,551

UNITED STATES PATENT OFFICE

2,259,551

EXERCISING HORSE

Myles John Burke, Jersey City, N. J.

Application April 15, 1941, Serial No. 388,569

10 Claims. (Cl. 128—25)

This invention relates to new and useful improvements in an exercising horse, and specifically, to improvements over my copending application Serial No. 340,001, filed June 12, 1940.

The invention proposes an exercising horse with which one may take a large number of different exercises.

Still further the invention proposes in an exercising horse having a frame supporting a pivotal seat and a pivotal horizontal arm below said seat and having means for oscillating said seat and arm, a certain arrangement of platform pivotally mounted on the frame to the rear and below the seat and supported on bars connected with said horizontal arm in such a manner that the platform will oscillate simultaneously with the seat, but in a different phase. Specifically, the arrangement is such that when the front of the seat goes up, the front of the platform will go down, and therefore when the back of the seat goes down the back of the platform will come up. It is proposed that certain mechanism be mounted on the platform; and with this construction the exercising horse may be used to perform a large variety of exercises.

It is proposed that a strap be mounted on the rear of the platform by which one may strap the feet to the platform so that it is possible to lay longitudinally across the seat and operate the exercising horse for exercising one's back and legs in a certain way. It is also proposed to mount a chest beater on the platform capable of beating the chest for exercising the same. Furthermore, it is contemplated to mount a head rest on the frame to support one's head during certain exercises.

The invention also contemplates mounting arm stretchers, leg stretchers and leg massagers on said platform to perform additional exercises, when desired.

The invention also proposes to provide the exercising horse with bicycle handles and foot pedals connected in a certain manner to perform additional exercises. An arrangement is also proposed to mount certain massaging elements upon the frame of the device, and to connect these elements in a certain way with moving parts of the exercising horse to perform additional exercises.

It is also proposed to mount a clock on the frame of the device so that each exercise may be timed.

The invention further contemplates arranging certain equipment upon the exercising horse to exercise one's neck, the arches of the feet, and other parts of the body.

Still further the invention proposes a certain attachment by which a punching bag may be mounted on the exercising horse, and used when desired.

For further comprehension of the invention, and of the objects and advantages thereof, reference will be had to the following description and accompanying drawings, and to the appended claims in which the various novel features of the invention are more particularly set forth.

In the accompanying drawings forming a material part of this disclosure:

Fig. 1 is a side elevational view of an exercising horse constructed in accordance with this invention.

Fig. 2 is a fragmentary vertical sectional view taken on the line 2—2 of Fig. 1.

Fig. 3 is a fragmentary horizontal sectional view taken on the line 3—3 of Fig. 1.

Fig. 4 is a fragmentary horizontal sectional view taken on the line 4—4 of Fig. 1.

Fig. 5 is a fragmentary vertical sectional view taken on the line 5—5 of Fig. 1.

Fig. 6 is a fragmentary enlarged horizontal sectional view taken on the line 6—6 of Fig. 1.

Fig. 7 is a perspective view of the head rest shown in Fig. 1.

Fig. 8 is a perspective view of a chest beater which may be mounted on the platform of the device in lieu of the chest beater shown in Fig. 1.

Fig. 9 is a fragmentary side elevational view of an exercising horse constructed in accordance with a modified form of this invention.

Fig. 10 is a fragmentary vertical sectional view taken on the line 10—10 of Fig. 9.

Fig. 11 is a vertical sectional view taken on the line 11—11 of Fig. 9.

Fig. 12 is a perspective view of the rear portion of the platform shown in Fig. 1 but provided with an additional attachment.

Fig. 13 is another perspective view of the rear portion of the platform shown in Fig. 1 but provided with another attachment.

Fig. 14 is a fragmentary side elevational view of an exercising horse arranged in accordance with another modified form of the invention.

The exercising horse, in accordance with this invention, includes a frame 18 mounted on a base 19 which is adapted to rest on the floor, or other support. The frame 18 somewhat resembles a bicycle frame consisting of certain pipe connections and pipes. Specifically, there is a front connection 20, a center connection 21, and rear connections 22. Substantially horizontal pipes 23 and 24 are mounted between the front connection

20 and the center connection 21. Pipes 25 (see Figs. 1 and 3) are mounted between the center connection 21 and the rear connections 22. A front downwardly and rearwardly extending pipe 26 is mounted between the front connection 20 and the base 19. A central downwardly and forwardly extending pipe 27 is mounted between the central connection 21 and a base bracket 28 mounted on the base 19. Pipes 29 (see Figs. 1 and 5) connect the base bracket 28 with the rear connections 22. Support rods 30 are mounted between the rear connections 22 and the base 19.

The exercising horse is provided with a seat 31. This seat is fixedly mounted a parallel pair of substantially horizontal arms 32. The arms 32 are pivotally mounted at their centers by a pintle 33, on a short length of pipe 34 mounted on the center connection 21. Horizontal arms 35 are located some distance below the arms 32 and are pivotally mounted at their centers by a pintle 36 mounted on a bracket 37 attached on the pipe 27. Side arms 38 and 39 are pivotally connected between the front and rear ends of the arms 32 and 35. This group of arms forms a double parallelogram as may be readily seen from an examination of Figs. 1 and 3.

Means is provided for oscillating the seat 31. This means includes a motor 40 mounted on the base 19 and having a driven pulley 41 engaged by a belt 42 which engages over the drive wheel 43 of a speed transmission 44 mounted on the pipes 29. This speed transmission 44 has a driven wheel 45 engaged by a belt 46 which engages over a wheel 47 mounted upon a shaft 48 extending into the side of a casing 49 mounted on the base bracket 28. The shaft 48 connects with a crank 50 mounted within the casing 49. A link 51 is pivotally connected with the crank 50 and extends upwards out of the open top of the casing 49 and pivotally connects with the pivotal joint of the arms 35 and 38. The transmission 44 has a control lever 52 which is connected with a rod 53 connecting with a control handle 54. The handle 54 is pivotally mounted by a pintle 55 on the pipe 24. The top of the handle 54 may be moved for moving the control lever 52 of the transmission for shifting the same to different speeds.

The front connection 20 is provided with a central vertical post 56 which supports a horizontal tube 57. A pair of bicycle handle bars 58 are freely mounted through the tube 57. Radial arms 59 are loosely mounted on the bicycle bars 58, to the side of the tube 57. Removable pins 60 engage through the hub portions of the radial arms 59 and the bicycle bars 58 to pin these parts together so that they move in unison. The radial arms 59 pivotally connect with links 61 which are connected together at their bottom ends by a pintle 62. A link 63 pivotally connects with the pintle 62 and with the crank 50. The arrangement is such that when the crank 50 operates, the radial arms 59 will oscillate, and if the pins 60 are in position, the bicycle handle bars 58 will also oscillate.

The front connection 20 is provided with a pair of parallel vertical passages 64 through which a pair of parallel upright rods 65 slidably pass. These rods rest on a platform 66 which is mounted on a bar 67 pivotally supported intermediate of its ends by a pintle 68 on a bracket 69 mounted on the pipe 26. The inner end of the bar 67 is pivotally connected with the pintle 62. Springs 70 are attached to the upright rods 65 and to the bar 67 and normally urge the upright rods 65 downwards upon the platform 66. The top end of each upright rod 65 is provided with a rubber knob 71.

A block 72 is slidably mounted on each upright rod 65. A set screw 73 threadedly engages through the block 72 and abuts the upright rod 65 for adjustably holding the block in position. A bracket 72a is mounted on each block 72. These brackets 72a support rollers 74. These rollers 74 are in the nature of massaging rollers adapted to engage one's back or other portions of the body for massaging purposes. A head rest pad 75 is supported on a bracket 76 which is removably mounted on the pipe 23. A clock 77 is mounted upon the front connection 20. The seat 31 has a pair of rings 78 at its sides, to which a pair of stirrups 79 may be removably attached.

A platform 80 is mounted on a pair of parallel rods 81 which are pivotally mounted by a pintle 82 which is mounted across the rear connections 22. The front ends of the bars 81 have elongated slots 83 which are engaged by pintles 84 connected with the arms 35 and 39. The arrangement is such that oscillations from the arms 35 will be transmitted to oscillate the platform 80. The rear end of the platform 80 has an upwardly projecting flange 85 adapted to receive the arches of one's feet for exercising purposes.

A block 19a is mounted across the front of the base 19 for assisting in exercising the arches of the feet. The arches are rested on the top front corners of the block 19a and the handle bars 58 are held while they oscillate to roll the arches on said corner of the block 19a. A strap 86 is mounted around the platform 80 and is adapted to strap down one's feet while one lies upon the seat 31 with the stomach up and the head resting on the head rest 75. The platform 80 is also provided with a pair of threaded openings 87, see Fig. 3. Chest beaters 88 are removably mounted in these openings 87. Each chest beater 88 comprises a pair of telescopic members 89 and 90 adapted to be fixed in various extended positions by a set screw 91. A pad 92 is mounted upon the top ends of the sections 89. When the platform 80 oscillates, a person may stand to the rear of the platform 80 so that the pads 92 strike the chest for exercising purposes. The sections 89 may be raised or lowered to adjust its height.

In Fig. 8 a modified form of chest beater 88' is illustrated which comprises a pair of telescopic sections 89' and 90' adjustably held in position by a set screw 91'. The outer end of the section 89 is turned into a hook shape 93 which is covered with leather material 94 in the nature of padding. Chest beaters of this type may be substituted for the chest beaters 88, shown in Fig. 1.

In Fig. 9 a modified form of the invention has been disclosed in which a leg stretcher 95 is shown mounted on the rear of the platform 80. This leg stretcher 95 comprises an inverted U-shaped strip of metal 96 which is secured upon the platform 80 by bolts 97. The side arms of the U-shaped strip 96 are provided with slots 98. Braces 99 and 100 are adjustably mounted on the side arms of the strip 96 by bolts and nuts 101 passing through the braces and through the slots 98. Leg engaging straps 102 are connected with springs 103 which are attached to the braces 100. The arrangement is such that the straps 102 may be strapped around one's ankles while seated on the seat 31 and then when the exercising machine is being operated the rear of the seat 31 will move up while the rear of the platform 80 will move down and this will stretch the legs.

The base 19 is formed with a pair of openings 104 adapted to receive a frame 105 which is held in position by nuts 106. This frame 105 has a top horizontal arm 107 upon which a plate 108 is adjustably supported. This plate 108 has a collar 109 sliding on the arm 107. A set screw 110 holds the collar 109 in various fixed positions. A punching bag 111 is mounted on the plate 108.

Fig. 12 shows a leg massager mounted on the platform 80. This leg massager comprises an inverted U-shaped bracket 112 which is releasably held on the platform 80 by a bolt 113. A wooden roller 114 is mounted between the top ends of the arms of the U-shaped bracket 112. When one sits on the seat 31 facing the rear the calves of the legs may rest on the roller 114, and during the operation of the exercising machine the roller 114 will roll back and forth along the calves, massaging them.

Fig. 13 illustrates a stretcher for the arms. This stretcher comprises a pair of eye screws 115 mounted on the sides of the platform 80. A pair of springs 116 are connected with the eye screws 115 and extend upwards and are provided with handles 117. These handles are held together by a connecting strand 118. When one sits on the seat 31 facing the rear and with the hands grip the handles 117, the arms will be stretched during the operation of the exercising horse since the rear of the platform 80 moves in an opposite direction to the rear of the seat 31.

In Fig. 14 a neck exercising device is disclosed. This neck exercising device includes a strap 120 adapted to engage around one's head. This strap is provided with a skull engaging top strap 121 to hold the strap 120 from slipping. A spring 122 connects with the strap 120 and with a hook 123 on a rod 124 which is removably mounted on the front connection 20. A person places the strap 120 around his head and sits on the seat 31, and during the operation of the exercising horse the head will be caused to move forwards and rearwards stretching the spring 122 and exercising the neck.

The operation of the device is as follows:

A person may sit on the seat 31 and by adjustment of the control handle 54 controls the speed at which the seat 31 will be oscillated indirectly by the motor 40, the transmission 44, and the crank 50. While sitting on the seat 31 a person may grip the handle bars 58, and the handle bars 58 may be caused to oscillate or remain stationary, depending upon whether or not the pins 60 are in position or removed, and the exercise desired.

The massaging rollers 74 are used when a person stands to the front of the exercising horse and allows the rollers to engage a portion of the body.

It is believed that the other uses of the exercising horse are apparent from the prior description.

While I have illustrated and described my invention with some degree of particularity, I realize that in practice various alterations therein may be made. I therefore reserve the right and privilege of changing the form of the details of construction or otherwise altering the arrangement of the correlated parts without departing from the spirit or the scope of the appended claims.

Having thus described my invention, what I claim as new and desire to secure by United States Letters Patent is:

1. In an exercising horse having a frame supporting a pivotal seat and a pivotal horizontal arm below said seat and having means for oscillating said seat and arm, a platform pivotally mounted on said frame to the rear and below said seat, a bar attached on said platform and projecting forwards of said platform and slidably and pivotally connected with said horizontal arm, and a strap mounted on the rear of said platform for holding the feet of a person exercising while said person is lying longitudinally across said seat.

2. In an exercising horse having a frame supporting a pivotal seat and a pivotal horizontal arm below said seat and having means for oscillating said seat and arm, a platform pivotally mounted on said frame to the rear and below said seat, a bar attached on said platform and projecting forwards of said platform and slidably and pivotally connected with said horizontal arm, and a head rest mounted on said frame to the front of said seat.

3. In an exercising horse having a frame supporting a pivotal seat and a pivotal horizontal arm below said seat and having means for oscillating said seat and arm, a platform pivotally mounted on said frame to the rear and below said seat, a bar attached on said platform and projecting forwards of said platform and slidably and pivotally connected with said horizontal arm, and arm stretchers on the rear of said platform.

4. In an exercising horse having a frame supporting a pivotal seat and a pivotal horizontal arm below said seat and having means for oscillating said seat and arm, a platform pivotally mounted on said frame to the rear and below said seat, a bar attached on said platform and projecting forwards of said platform and slidably and pivotally connected with said horizontal arm, and arm stretchers on the rear of said platform, comprising springs attached to the platform, and handles at the free ends of the springs which may be manually gripped.

5. In an exercising horse having a frame supporting a pivotal seat and a pivotal horizontal arm below said seat and having means for oscillating said seat and arm, a platform pivotally mounted on said frame to the rear and below said seat, a bar attached on said platform and projecting forwards of said platform and slidably and pivotally connected with said horizontal arm, and leg stretchers mounted on the rear of said platform.

6. In an exercising horse having a frame supporting a pivotal seat and a pivotal horizontal arm below said seat and having means for oscillating said seat and arm, a platform pivotally mounted on said frame to the rear and below said seat, a bar attached on said platform and projecting forwards of said platform and slidably and pivotally connected with said horizontal arm, and leg stretchers mounted on the rear of said platform, comprising a removable U-shaped strip mounted on said platform, braces adjustably mounted on the side arms of said strip, leg engaging straps, and springs connecting said leg engaging straps with said braces.

7. In an exercising horse having a frame supporting a pivotal seat and a pivotal horizontal arm below said seat and having means for oscillating said seat and arm, a platform pivotally mounted on said frame to the rear and below said seat, a bar attached on said platform and projecting forwards of said platform and slidably and pivotally connected with said horizontal arm,

and a leg massager mounted on the rear of said platform.

8. In an exercising horse having a frame supporting a pivotal seat and a pivotal horizontal arm below said seat and having means for oscillating said seat and arm, a platform pivotally mounted on said frame to the rear and below said seat, a bar attached on said platform and projecting forwards of said platform and slidably and pivotally connected with said horizontal arm, and a leg massager mounted on the rear of said platform, comprising a removable bracket mounted on said platform and supporting a horizontal roller.

9. In an exercising horse having a frame supporting a pivotal seat and a pivotal horizontal arm below said seat and having means for oscillating said seat and arm, a platform pivotally mounted on said frame to the rear and below said seat, a bar attached on said platform and projecting forwards of said platform and slidably and pivotally connected with said horizontal arm, and holding means for holding a portion of one's body while one is on said seat, and said holding means being mounted on the rear of said platform, whereby the portions of one's body on said seat and the portions of one's body held by said holding means will be moved in opposite directions during the operation of said exercising horse.

10. In an exercising horse having a frame supporting a pivotal seat and a pivotal horizontal arm below said seat and having means for oscillating said seat and arm, a platform pivotally mounted on said frame to the rear and below said seat, a bar attached on said platform and projecting forwards of said platform and slidably and pivotally connected with said horizontal arm, and holding means for holding a portion of one's body while one is on said seat, and said holding means being mounted on the rear of said platform, whereby the portions of one's body on said seat and the portions of one's body held by said holding means will be moved in opposite directions during the operation of said exercising horse, said holding means comprising members for connection with portions of one's body, and springs connected with said members and with the rear of said platform.

MYLES JOHN BURKE.