(12) INTERNATIONAL APPLICATION PUBLISHED UNDER THE PATENT COOPERATION TREATY (PCT)

(19) World Intellectual Property Organization
International Bureau

(43) International Publication Date
22 February 2024 (22.02.2024)

WIPO | PCT

(10) International Publication Number
WO 2024/038433 A1

(51) International Patent Classification:
E04G 15/06 (2006.01) *F16L 5/10* (2006.01)
E04F 17/08 (2006.01) *F16L 5/12* (2006.01)

(21) International Application Number:
PCT/IL2023/050836

(22) International Filing Date:
10 August 2023 (10.08.2023)

(25) Filing Language: English

(26) Publication Language: English

(30) Priority Data:
295722 17 August 2022 (17.08.2022) IL

(72) Inventor; and

(71) Applicant: **SADE, Nisim** [IL/IL]; 11 Smilanski Street, 8421638 Beer Sheva (IL).

(74) Agent: **LUZZATTO, Kfir** et al.; Luzzatto & Luzatto, P.O. BOX 5352, 8415202 Beer Sheva (IL).

(81) Designated States *(unless otherwise indicated, for every kind of national protection available)*: AE, AG, AL, AM, AO, AT, AU, AZ, BA, BB, BG, BH, BN, BR, BW, BY, BZ, CA, CH, CL, CN, CO, CR, CU, CV, CZ, DE, DJ, DK, DM, DO, DZ, EC, EE, EG, ES, FI, GB, GD, GE, GH, GM, GT, HN, HR, HU, ID, IL, IN, IQ, IR, IS, IT, JM, JO, JP, KE, KG, KH, KN, KP, KR, KW, KZ, LA, LC, LK, LR, LS, LU, LY, MA, MD, MG, MK, MN, MU, MW, MX, MY, MZ, NA, NG, NI, NO, NZ, OM, PA, PE, PG, PH, PL, PT, QA, RO, RS, RU, RW, SA, SC, SD, SE, SG, SK, SL, ST, SV, SY, TH, TJ, TM, TN, TR, TT, TZ, UA, UG, US, UZ, VC, VN, WS, ZA, ZM, ZW.

(84) Designated States *(unless otherwise indicated, for every kind of regional protection available)*: ARIPO (BW, CV, GH, GM, KE, LR, LS, MW, MZ, NA, RW, SC, SD, SL, ST, SZ, TZ, UG, ZM, ZW), Eurasian (AM, AZ, BY, KG, KZ, RU, TJ, TM), European (AL, AT, BE, BG, CH, CY, CZ, DE, DK, EE, ES, FI, FR, GB, GR, HR, HU, IE, IS, IT, LT, LU, LV, MC, ME, MK, MT, NL, NO, PL, PT, RO, RS, SE, SI, SK, SM, TR), OAPI (BF, BJ, CF, CG, CI, CM, GA, GN, GQ, GW, KM, ML, MR, NE, SN, TD, TG).

Declarations under Rule 4.17:
— *of inventorship (Rule 4.17(iv))*

Published:
— *with international search report (Art. 21(3))*

WO 2024/038433 A1

(54) Title: A PIPELINE CONNECTOR FOR PIPELINE INSTALLATION WITHIN POURED CONCRETE STRUCTURES

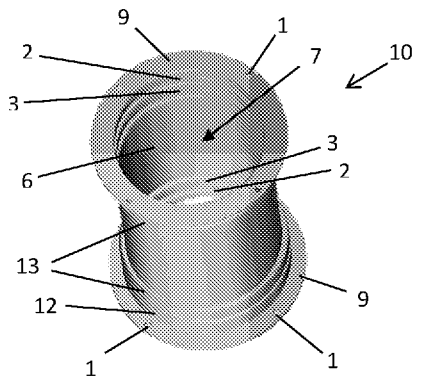

Fig. 1

(57) Abstract: The present invention is a pipeline connector designed to form holes and openings in poured concrete structures. The pipeline connector comprises a dual sealing ring configuration within a cylindrical sleeve, ensuring a reliable and secure seal between connected pipes. The dual sealing ring configuration provides redundancy and reliability, even in the event of damage to one of the sealing rings. The pipeline connector streamlines the pipeline installation process, eliminating the need for additional sealing materials or complex jointing methods. The invention also includes an extender adapted to partially receive the pipeline connector, forming a cylindrical telescopic/adjustable sleeve. The combined assembly of the pipeline connector and the extender forms a reliable conduit that enables efficient fluid transfer between two separate pipes while maintaining a sealed environment.

A PIPELINE CONNECTOR FOR PIPELINE INSTALLATION WITHIN POURED CONCRETE STRUCTURES

Field of the Invention

The present invention relates to the field of fluid pipeline connections within poured concrete walls, ceilings and floors. More specifically, the invention pertains to a novel pipe designed with a dual internal sealing ring configuration, offering significant advancements in the installation of pipelines within poured concrete structures.

Background

In the construction industry, multiple-unit structures, buildings, offices and housing structures are commonly constructed using concrete floors and slabs to ensure structural stability and load-bearing capacity. To enable the installation and supply of plumbing, efficient positioning of fluid-flowing pipelines from the bases of the structures to their top floors is crucial. The conventional method for achieving this task involves several stages as follows:

1. Casting: In this initial stage, the concrete floor or slab of a housing structure is cast following generally accepted construction standards. Based on the constructor's specifications, a location for a pipe to pass through is identified, and a soft material, such as polystyrene, is used to temporarily seal the opening, facilitating easier foramen formation.

2. Preparation: During this stage, a hole-forming device is securely aligned and secured to create the foramen with the desired diameter for the fluid-flowing pipeline. It should be emphasized that the foramen formation process can distort the shape of the opening.

3. Layout: In this stage, the desired pipeline is laid through the created foramen in the ceiling and further sealed to prevent movement during usage. Due to the shape distortion of the opening, sealing the opening typically requires additional effort, leading to unnecessary expenses.

Overall, the layout procedure of fluid-flowing pipelines in this manner is characterized by ergonomic challenges, time-consuming processes, and inefficiencies. Additionally, a significant drawback is the potential formation of cracks in pipes, which can be caused by pressure changes and ground settling over time. Ground settling, in particular, may lead to pipe damage if the stress applied to the pipes is sufficient, resulting in eventual cracking or breakage.

To address these issues, the present invention aims to provide a more efficient and reliable solution for pipeline installation. It introduces a specially designed pipe for forming holes and openings through concrete or other poured construction materials.

It is an object of the present invention to provide a more efficient and reliable solution for pipeline installation within multiple unit structures with concrete floors and slabs.

It is another object of the present invention to introduce a specially designed pipe for forming holes and openings through concrete or other building materials.

It is another object of the present invention to enable the establishment of fluid communication between two separate pipes in a sealed manner, ensuring smooth flow and preventing leaks.

It is yet another object of the present invention to facilitate a flexible connection between two separate pipes using the innovative pipe, reducing the risk of cracks caused by pressure changes or ground settling in the surrounding area.

It is still another object of the present invention to optimize adjustments during the casting stage by utilizing the pipe's innovative structure, leading to improved movement reduction compared to the final stage of the process.

It is yet another object of the present invention to enhance the overall pipeline installation process, ensuring reliable and long-term performance while promoting the seamless connection of pipelines between walls and ceilings.

It is yet another object of the present invention to streamline the pipeline installation process, reducing the need for additional sealing materials and complex jointing methods, thereby saving time and resources.

It is another object of the present invention to minimize the risk of damage to pipelines caused by pressure changes and ground settling, resulting in improved durability and longevity of the installed pipeline system.

It is yet another object of the present invention to promote the efficient flow of fluids within the constructed ducts, ensuring smooth and reliable fluid transfer from the bases to the top floors of the constructed multiple-unit structures.

It is yet another object of the present invention to provide a cost-effective and practical solution for achieving efficient pipeline connections within poured concrete walls and ceilings, contributing to the overall quality and functionality of the constructed building.

Other objects and advantages of the invention will become apparent as the description proceeds.

Summary of the Invention

The invention is a pipeline connector for forming holes and openings in poured concrete structures. The pipeline connector comprises:

- a cylindrical sleeve;
- a dual sealing ring configuration positioned within the cylindrical sleeve, wherein the dual sealing ring configuration comprises two separate internally assembled rubber layers; and
- at least one end of the pipeline connector having dedicated corresponding grooves in the inner wall, wherein the two internal sealing rings are matched to these grooves, wherein an outer ring of the two internal sealing rings positioned more proximate to the exterior of the pipeline connector with respect to an end of the pipeline connector, acting as a protective barrier during a concrete pouring process, and an inner ring of the two internal

sealing rings positioned less proximate to the exterior of the pipeline connector with respect to the same end of the pipeline connector, serving as the primary sealing element.

In one aspect, the outer ring prevents wet concrete from contacting the inner ring during the concrete pouring process.

In one aspect, the inner ring ensures a reliable and secure seal between connected pipes.

In one aspect, the dual sealing ring configuration ensures an optimal internal grip of a first fluid-flowing pipeline received at one end of the pipeline connector.

In one aspect, each end of the pipeline connector comprises the dual sealing ring configuration.

In one aspect, the pipeline connector further comprises an inclined rubber layer separating the internal sections of both ends of the pipeline connector, either integrated or added to the sleeve, which serves to prevent fluid leakage from the side walls of the pipe.

In one aspect, both ends of the pipeline connector have graded external frameworks to enable optimum adjustments during the concrete casting process.

In one aspect, at least one end of the pipeline connector comprises a flange that forms a base-like structure at that end of the pipe, the base-like structure exceeding the diameter of the cylindrical sleeve, allowing secure attachment of the pipeline connector to a concrete-forming baseplate using nailing, screwing, or other suitable securing means.

In one aspect, the flange comprises several holes around its perimeter, allowing bolts or screws to securely fasten the pipeline connector to the concrete-forming baseplate.

In one aspect, the dual sealing ring configuration absorbs movement and redistributes stress, preventing the formation of cracks in the pipes due to pressure changes or ground settling.

In another aspect, the invention relates to an extender for the pipeline connector, the extender comprising:

- a dual sealing ring configuration similar to the dual sealing ring configuration of the pipeline connector; and
- a flange located at one end of the extender, allowing secure attachment of the extender to a concrete-forming baseplate.

In one aspect, the extender is designed to partially receive the pipeline connector, forming a cylindrical telescopic/adjustable sleeve.

Brief description of the drawings

In the drawings:

- Fig. 1 is a perspective of a pipeline connector in the form of a cylindrical sleeve, according to an embodiment of the invention;
- Fig. 2 is a perspective of the pipeline connector of Fig. 1 with assembled pipes, according to an embodiment of the invention;
- Fig. 3 schematically illustrates an extender for the pipeline connector of Fig. 1, according to an embodiment of the invention;
- Fig. 4A schematically illustrates a perspective view of the pipeline connector of Fig. 1 received within the extender of Fig. 3, according to an embodiment of the invention;
- Fig. 4B is a side view of Fig. 4A;
- Fig. 4C schematically illustrates the pipeline connector of Fig. 1 after cutting one of its ends to allow its insertion into the extender of Fig. 3; and
- Fig. 5 is a cross-sectional view of the pipeline connector of Fig. 1, according to an embodiment of the invention.

Detailed Description of the Invention

The present invention is related to a pipeline connector designed for forming holes and openings that continuously extend through poured concrete structures, such as floors and slabs. The pipe is intended to be installed within a wall or shell, resulting in a duct in the finished state.

The core aspect of the invention revolves around a pipeline connector that comprises a dual sealing ring configuration within a pipe in the form of a cylindrical sleeve. According to an embodiment of the invention, at least one end of the pipeline connector (e.g., an upper section of the pipeline connector) features two separate internally assembled rubber layers that form the dual sealing ring configuration. According to an embodiment of the invention, the pipeline connector with dual internal sealing rings is designed for seamless pipeline connections within poured concrete structures. At each end of the pipeline connector, there are dedicated corresponding grooves in the inner wall, and the two internal sealing rings are precisely matched to these grooves. The outer ring, positioned closer to the pipeline connector's exterior, acts as a protective barrier during the concrete pouring process, ensuring the integrity of the second inner sealing ring. Thus, the first sealing ring serves as a blockage, preventing wet concrete from contacting the second inner sealing ring, and the actual sealing is performed by the second inner sealing ring, ensuring a reliable and secure seal between connected pipes. This unique dual-ring configuration enhances sealing performance, providing redundancy and reliability, even in the event of damage to the outer ring.

The pipeline connector of the present invention streamlines the pipeline installation process, eliminating the need for additional sealing materials or complex jointing methods. As a result, fluid flows smoothly from one pipe to another, facilitating efficient transfer within the constructed ducts. The dedicated design of the pipeline connector's sealing rings prevents wet concrete from compromising the integrity of the inner ring, ensuring long-lasting and effective sealing performance.

According to an embodiment of the invention, the dual sealing ring configuration further ensures an optimal internal grip of a corresponding first fluid-flowing pipeline

received at one end of the pipeline connector (e.g., the upper end with respect to a ceiling installation of the pipeline connector, i.e., in a vertical flow direction). Similarly, the other end of the pipeline connector (e.g., the lower end) is equipped with two separate internally assembled rubber layers (i.e., that form the dual sealing ring configuration) to achieve the same optimal internal grip of a corresponding second fluid-flowing pipeline received at the other end the pipeline connector (e.g., the lower end).

According to an embodiment of the invention, the internal sections of both ends of the pipeline connector are separated by an inclined rubber layer, either integrated or added to the sleeve, which serves to prevent fluid leakage from the side walls of the pipe.

According to an embodiment of the invention, both ends of the pipeline connector have graded external frameworks to enable optimum adjustments during the concrete casting process.

In some embodiments, one end of the pipeline connector (e.g., the end that may serve as a lower end with respect to a vertical flow installation) comprises a flange that forms a base-like structure at that end of the pipe. The base-like structure exceeds the diameter of the cylindrical sleeve allowing secure attachment of the pipeline connector to a concrete-forming baseplate using nailing, screwing, or other suitable securing means.

Referring to the provided drawings, Fig. 1 schematically illustrates a pipeline connector 10 in the form of a cylindrical sleeve 8, according to an embodiment of the invention. Pipeline connector 10 comprises two internal sealing rings, a first sealing ring 2 and a second sealing ring 3, each fitted into dedicated corresponding grooves 12 and 13 in an inner wall 6 of pipeline connector 10 that forms the dual sealing ring configuration. In this embodiment, the dual sealing ring configuration applies at about both end sections of pipeline connector 10, symmetrically. Each of the two internal sealing rings 2 and 3 is a sealing rubber tightly placed against the side walls of pipeline connector 10 within the corresponding grooves 12 and 13, effectively preventing fluid leakage and providing optimal internal grip for each

connected pipeline at each end of pipeline connector 10 (see Fig. 2). Wherein the first sealing ring 2 is positioned closer to the exterior of pipeline connector 10, acting as a protective barrier against wet concrete during the pouring process, and wherein the second sealing ring 3 is positioned closer to the interior of the pipe, serving as the primary sealing element. The inner space of pipeline connector 10 is indicated by the numeral 7.

According to an embodiment of the invention, pipeline connector 10 comprises a flange 9 that forms a broader and flat base-like structure at each end of the pipe. As shown in the figure, the base-like structure exceeds the diameter of pipeline connector 10, allowing secure attachment of pipeline connector 10 to a concrete-forming baseplate using nailing, screwing, or other suitable securing means. Flange 9 has several holes 1 around its perimeter, allowing bolts or screws to securely fasten them to the concrete-forming baseplate (not shown). Flange 9 can be fixed in place during the construction of a concrete ceiling by assembling screws via holes 1, and the specific external structure allows for optimal adjustments during the casting stage.

Fig. 2 demonstrates a pipeline connector 10 with two separate assembled pipes 4 and 5, inserted through its ends, according to an embodiment of the invention. This configuration allows connecting two separate pipes 4 and 5, enabling fluid communication between them, while the inner space 7 of pipeline connector 10 serves as a fluid transfer medium between the two pipes 4 and 5. Moreover, the flexible connection provided by the dual ring configuration prevents the formation of cracks in the pipes, which may be caused by pressure changes or ground settling in the sleeve surroundings.

According to an embodiment of the invention, the flexible connection provided by the dual ring configuration prevents the formation of cracks in the pipes due to the following key reasons:

- Absorption of Movement: The presence of two internal sealing rings in the pipeline connector 10 allows for some degree of movement or flexing between the connected pipes. When pressure changes occur within the pipeline or when

the ground settles, these dual sealing rings absorb and distribute the stress or movement along the length of the pipeline. This flexibility prevents concentrated forces from being exerted at specific points, which significantly reduces the risk of cracks forming in the pipes; and

- Stress Redistribution: As pressure changes or ground settling affect the surrounding environment of the pipeline, there may be slight shifts or displacements in the pipeline. The dual sealing rings act as a buffer, redistributing the stress caused by these movements across their surface area. This redistribution of stress helps to maintain the structural integrity of the pipeline, ensuring that no single point is subjected to excessive stress or strain, thereby mitigating the formation of cracks.

Fig. 3 schematically illustrates an extender 20 designed to partially receive the pipeline connector 10, forming a cylindrical telescopic/adjustable sleeve, according to an embodiment of the invention. This combination enables fitting pipeline connector 10 to different structure widths of a ceiling, wall, or any other suitable structure. Extender 20 comprises a dual sealing ring configuration similar to the dual sealing ring configuration of pipeline connector 10, where the two internal sealing rubber rings 22 and 23 are placed against its side walls 26 within corresponding grooves 32 and 33, similar to the internal structure of pipeline connector 10. Extender 20 can be fixed in place during the construction of a concrete ceiling by assembling screws via holes 27 and/or 28 of a flange 29 located at the end of extender 20.

In Figs. 4A and 4B, pipeline connector 10 is partially inserted into extender 20, allowing height adjustment by setting the desired length of the combined sleeve to fit the width of a wall or ceiling. In this embodiment, the two internal sealing rubbers rings 22 and 23 of extender 20 adapted to sealingly grip one end of pipeline connector 10 inserted into it. In order to insert pipeline connector 10 into extender 20, one end of pipeline connector 10 needs to be cut (e.g., by any suitable cutting or sawing tool). Fig. 4C schematically illustrates pipeline connector 10 after cutting one end to enable its insertion into extender 20.

One end of pipeline connector 10 is designed to fit snugly and securely into a corresponding end of extender 20. Notably, at that end, extender 20 possesses a larger diameter than pipeline connector 10. In contrast, the other end of extender 20 maintains the same diameter as pipeline connector 10. As a result of this strategic design, the combination of pipeline connector 10 and extender 20 yields an adjustable version of the original connector 10.

The adjusted version of pipeline connector 10 created by this combination is achieved by inserting one end of the connector 10 into the wider diameter of the extender 20, creating a telescopic and adaptable structure. This telescopic design facilitates the accommodation of various structure widths, such as walls or ceilings, through which the pipeline needs to pass. The adjustment is achieved by determining the insertion depth of the pipeline connector 10 into the extender 20. Through this adjustment, the combined assembly of the pipeline connector 10 and the extender 20 can be precisely customized to match the specific construction thickness required for the concrete building.

This innovative mechanism of adjusting pipeline connector 10 through the use of the extender 20 enhances the versatility and practicality of the pipeline installation process. It enables a seamless fit within different structure widths, contributing to the efficiency and effectiveness of the pipeline connections within poured concrete walls and ceilings.

The un-inserted end of pipeline connector 10 is purposefully designed to seamlessly receive and connect with a first pipe (e.g., such as pipe 5 of Fig. 2). On the other hand, the opposite end of extender 20 is also meticulously configured to accommodate and securely connect with a second pipe (e.g., such as pipe 4 of Fig. 2). When the two pipes (e.g., pipes 4 and 5) are effectively inserted into the respective ends of pipeline connector 10 and extender 20, a continuous pipeline is established.

This interconnected system results in a pipeline arrangement wherein the first and second pipes are in fluid communication, facilitated by the seamless combination of pipeline connector 10 and extender 20. The innovative design of pipeline connector

10 and extender 20 with dual sealing ring configuration ensures that fluid can flow seamlessly from the first pipe (e.g., pipe 4), through pipeline connector 10, along extender 20, and into the second pipe (e.g., pipe 5). The dual-component assembly (i.e., pipeline connector 10 and extender 20) forms a reliable conduit that enables efficient fluid transfer between the two separate pipes while maintaining a sealed environment, thus enhancing the overall functionality and reliability of the pipeline system.

In the combined assembly of pipeline connector 10 and extender 20, it's important to note that extender 20 incorporates the dual ring configuration (i.e., by the two internal sealing rubbers rings 22 and 23 and the corresponding grooves 32 and 33) specifically on the inserted cut end of pipeline connector 10.

This strategic implementation ensures that the benefits of the dual-ring design are extended to the adjustable version of the pipeline connector. The dual ring configuration of extender 20 on the inserted end pipeline connector 10 maintains the enhanced sealing performance, reliability, and stress-absorbing attributes, just like in the original pipeline connector 10. As a result, the entire assembly maintains the integrity of the fluid conduit, preventing leakage and providing flexibility to accommodate variations in structure width. This innovative integration of the dual ring configuration within extender 20 further enhances the overall effectiveness and adaptability of the pipeline connection system.

With this regard, it is important to highlight that the dual ring configuration is not only implemented within the connection of pipeline connector 10 and extender 20 but also extends to the connection points with the first and second pipes, such as with pipes 4 and 5.

Specifically, the end of pipeline connector 10 that receives the first pipe features the same dual-ring configuration. This ensures that the first pipe is effectively sealed and securely connected, benefiting from the enhanced sealing performance provided by the dual ring design.

Likewise, the end of the extender 20 that accommodates the second pipe is also equipped with a dual-ring configuration. This guarantees that the second pipe is properly sealed and connected, thereby maintaining the reliability and efficiency of the fluid transfer through the entire assembly.

The dual ring configuration spans across pipeline connector 10, extender 20, and the respective connection points with the first and second pipes. This comprehensive integration ensures consistent and effective sealing performance at every crucial juncture, establishing a robust and reliable pipeline connection system within poured concrete structures.

In a further embodiment of the present invention, both ends of the pipeline connector are designed with graded external frameworks. These frameworks consist of a series of structural modifications on the outer surface of the connector, such as ridges, grooves, protrusions, or other variations (e.g., as indicated by numeral 30 in Figs. 4A and 4B, as well as the protrusion outer surface of grooves 12 and 13, etc.). This graded design serves multiple purposes:

- Enhanced Grip: When the pipeline connector is placed within wet concrete, the graded structures offer improved anchoring. As the concrete sets and hardens, these graded modifications ensure that the connector remains firmly embedded, resisting any potential dislodgment or movement.

- Facilitated Adjustments: The graded external frameworks provide flexibility during the concrete casting process. If there's a need to make minor positional adjustments to the connector after its placement in the wet concrete, these structural features allow for such modifications, ensuring the connector's optimal alignment and positioning.

- Improved Sealing: As the concrete solidifies around the graded external frameworks, it forms a more intimate bond with the connector. This results in a tighter seal, minimizing potential leaks or seepage around the connector and ensuring the integrity of the connection.

This design of graded external frameworks, therefore, not only enhances the structural stability of the pipeline connector within concrete structures but also ensures its functional efficiency, making it a valuable feature in various construction scenarios.

Fig. 5 schematically illustrates a cross-sectional view of pipeline connector 10, featuring an inner ring 16 designed to prevent leakages by directing fluid toward the center of pipeline connector 10, away from the inner walls 6. The inner ring 16 may have a triangular-like profile to achieve this effect.

As the skilled person will appreciate, the arrangement described in the figures results in a pipeline connector with dual internal sealing rings offering significant advantages over traditional pipeline installation methods within poured concrete structures. These advantages include:

- Enhanced sealing performance: The dual ring configuration provides a reliable and secure seal between connected pipes, reducing the risk of leakage.

- Redundancy and reliability: The second inner sealing ring offers redundancy, ensuring continued sealing performance even in the event of damage to the outer ring.

- Protection against concrete impairment: The first sealing ring acts as a barrier, safeguarding the second inner sealing ring from the detrimental effects of wet concrete during the pouring process.

- Efficient pipeline installation: The innovative pipe streamlines the pipeline installation process, eliminating the need for additional sealing materials and reducing installation time.

- Long-Term Durability: The dedicated design of the pipeline connector's sealing rings ensures long-lasting sealing performance, providing a reliable solution for pipeline connections.

The terms "for example", "e.g.", and "optionally", as used herein, are intended to be used to introduce non-limiting examples. While certain references are made to certain example pipe components, other components can be used as well and/or the example components can be combined into fewer components and/or divided into further components.

All the above descriptions and examples have been given for the purpose of illustration and are not intended to limit the invention in any way. Many different mechanisms and structures can be employed with dual sealing ring configuration, all without exceeding the scope of the invention.

Claims

1. A pipeline connector for forming holes and openings in poured concrete structures, the pipeline connector comprising:

    a) a cylindrical sleeve;

    b) a dual sealing ring configuration positioned within the cylindrical sleeve, wherein the dual sealing ring configuration comprises two separate internally assembled rubber layers; and

    c) at least one end of the pipeline connector having dedicated corresponding grooves in the inner wall, wherein the two internal sealing rings are matched to these grooves, wherein an outer ring of the two internal sealing rings positioned more proximate to the exterior of the pipeline connector with respect to an end of the pipeline connector, acting as a protective barrier during a concrete pouring process, and an inner ring of the two internal sealing rings positioned less proximate to the exterior of the pipeline connector with respect to the same end of the pipeline connector, serving as the primary sealing element.

2. The pipeline connector of claim 1, wherein the outer ring prevents wet concrete from contacting the inner ring during the concrete pouring process.

3. The pipeline connector of claim 1, wherein the inner ring ensures a reliable and secure seal between connected pipes.

4. The pipeline connector of claim 1, wherein the dual sealing ring configuration ensures an optimal internal grip of a first fluid-flowing pipeline received at one end of the pipeline connector.

5. The pipeline connector of claim 1, wherein each end of the pipeline connector comprises the dual sealing ring configuration.

6. The pipeline connector of claim 1, further comprising an inclined rubber layer separating the internal sections of both ends of the pipeline connector, either

integrated or added to the sleeve, which serves to prevent fluid leakage from the side walls of the pipe.

7. The pipeline connector of claim 1, wherein both ends of the pipeline connector have graded external frameworks to enable optimum adjustments during the concrete casting process.

8. The pipeline connector of claim 1, wherein at least one end of the pipeline connector comprises a flange that forms a base-like structure at that end of the pipe, the base-like structure exceeding the diameter of the cylindrical sleeve, allowing secure attachment of the pipeline connector to a concrete-forming baseplate using nailing, screwing, or other suitable securing means.

9. The pipeline connector of claim 8, wherein the flange comprises several holes around its perimeter, allowing bolts or screws to securely fasten the pipeline connector to the concrete-forming baseplate.

10. The pipeline connector of claim 1, wherein the dual sealing ring configuration absorbs movement and redistributes stress, preventing the formation of cracks in the pipes due to pressure changes or ground settling.

11. An extender for the pipeline connector of claim 1, the extender comprising:

    a) a dual sealing ring configuration similar to the dual sealing ring configuration of the pipeline connector; and
    b) a flange located at one end of the extender, allowing secure attachment of the extender to a concrete-forming baseplate.

12. The extender of claim 10, wherein the extender is designed to partially receive the pipeline connector, forming a cylindrical telescopic/adjustable sleeve.

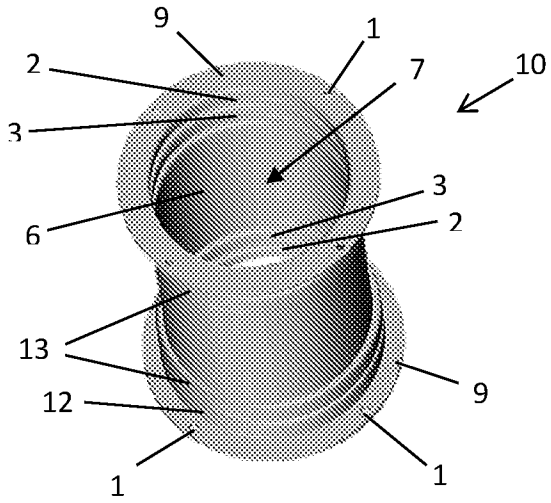

Fig. 1

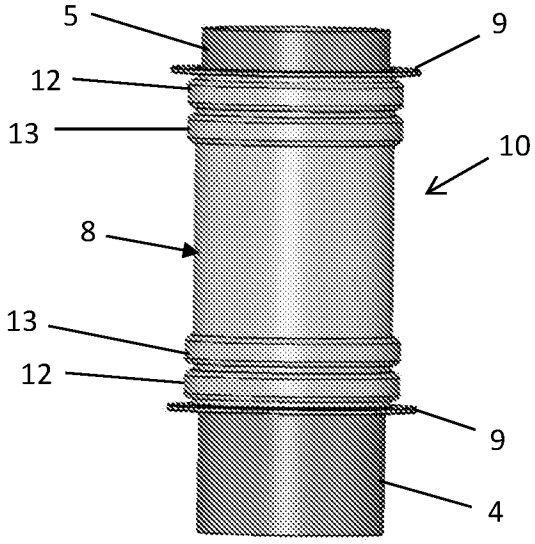

Fig. 2

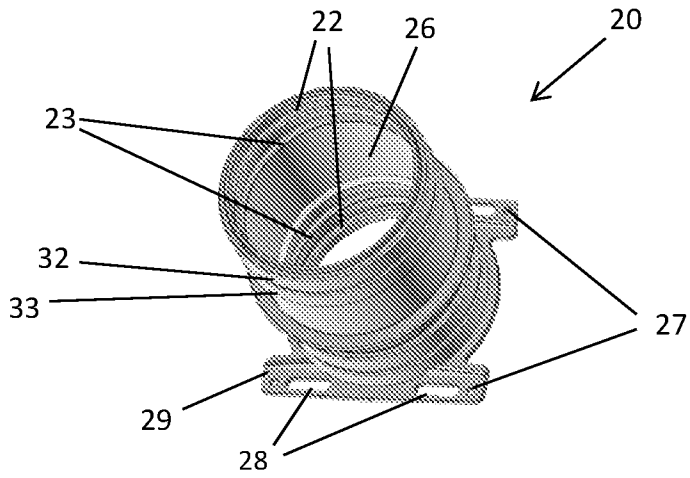

Fig. 3

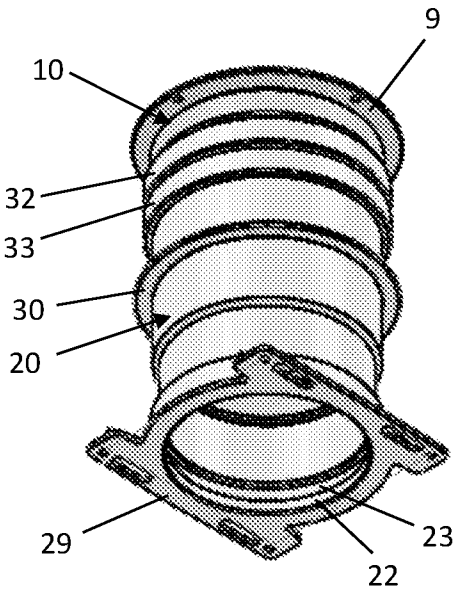

Fig. 4A

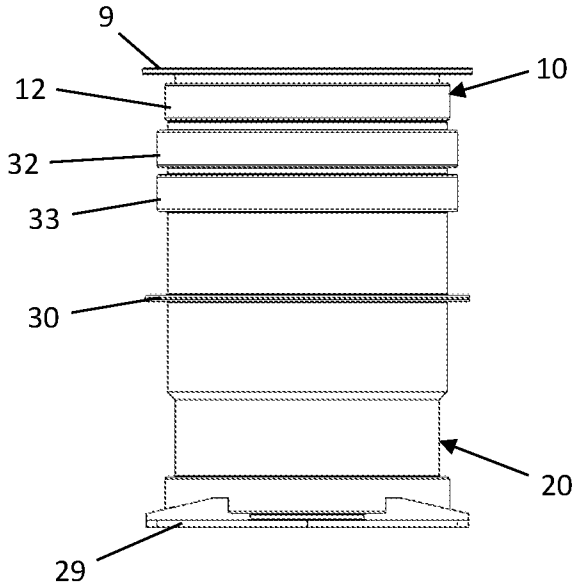

Fig. 4B

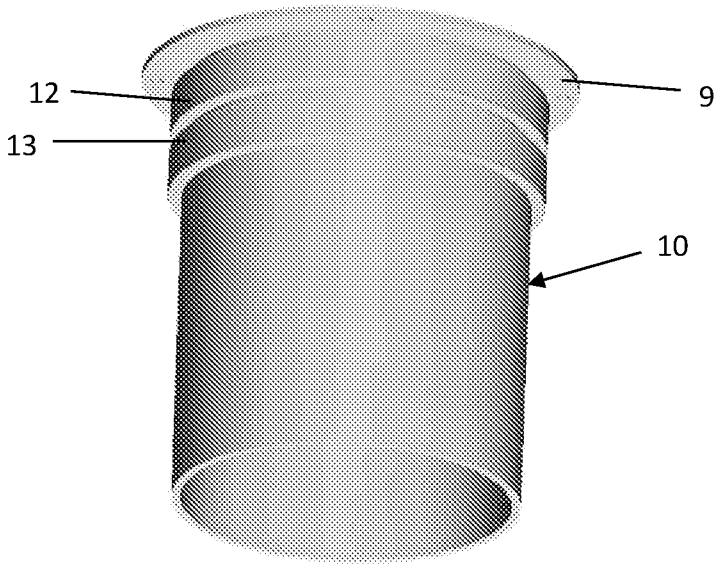

Fig. 4C

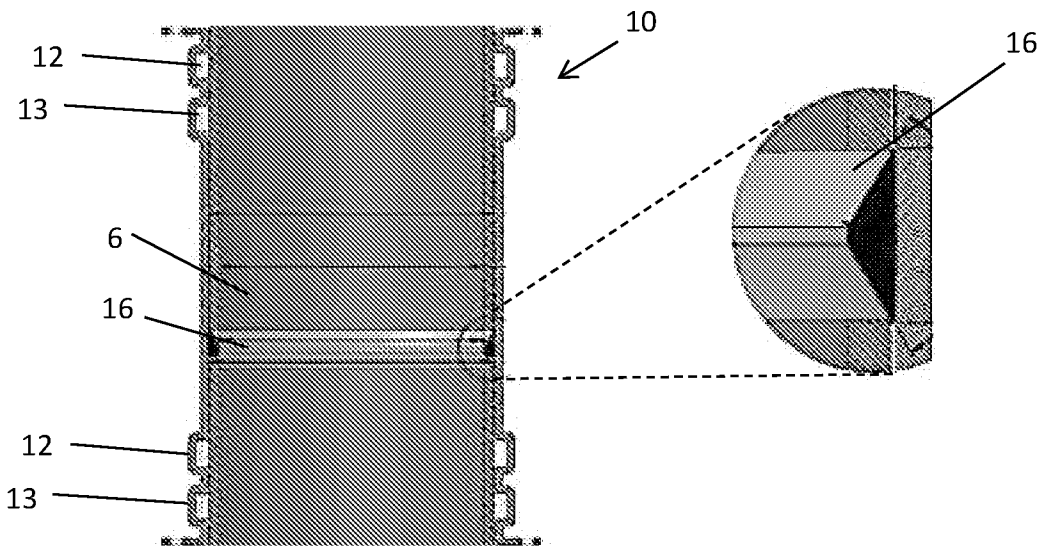

Fig. 5

INTERNATIONAL SEARCH REPORT

International application No.
PCT/IL2023/050836

A. CLASSIFICATION OF SUBJECT MATTER

E04G 15/06(2023.01)i; ***E04F 17/08***(2023.01)i; ***F16L 5/10***(2023.01)i; ***F16L 5/12***(2023.01)i
CPC:E04G 15/061; E04F 17/08; F16L 5/10; F16L 5/12

According to International Patent Classification (IPC) or to both national classification and IPC

B. FIELDS SEARCHED

Minimum documentation searched (classification system followed by classification symbols)

E04G 15/06; E04F 17/08; F16L 5/10; F16L 5/12
CPC:E04G 15/061; E04F 17/08; F16L 5/10; F16L 5/12

Documentation searched other than minimum documentation to the extent that such documents are included in the fields searched

Electronic data base consulted during the international search (name of data base and, where practicable, search terms used)

Databases consulted: Derwent Innovation

C. DOCUMENTS CONSIDERED TO BE RELEVANT

Category*	Citation of document, with indication, where appropriate, of the relevant passages	Relevant to claim No.
A	DE 2615428 A1 (THEODOR CORDES KG) 20 October 1977 (1977-10-20) the entire document	1-12
A	CN 103836268 A (ZHONGTIAN CONSTR GROUP CO LTD) 04 June 2014 (2014-06-04) the entire document	1-12
A	WO 2017129747 A1 (IFTISSEN G?RARD) 03 August 2017 (2017-08-03) the entire document	1-12
A	EP 2696124 A1 (BEELE ENG BV) 12 February 2014 (2014-02-12) the entire document	1-12
A	KR 100992693 B1 (KT CORPORATION) 05 November 2010 (2010-11-05) the entire document	1-12
A	US 4313286 A (HARBEKE GEROLD J) 02 February 1982 (1982-02-02) the entire document	1-12

☑ Further documents are listed in the continuation of Box C. ☑ See patent family annex.

* Special categories of cited documents:
"A" document defining the general state of the art which is not considered to be of particular relevance
"D" document cited by the applicant in the international application
"E" earlier application or patent but published on or after the international filing date
"L" document which may throw doubts on priority claim(s) or which is cited to establish the publication date of another citation or other special reason (as specified)
"O" document referring to an oral disclosure, use, exhibition or other means
"P" document published prior to the international filing date but later than the priority date claimed
"T" later document published after the international filing date or priority date and not in conflict with the application but cited to understand the principle or theory underlying the invention
"X" document of particular relevance; the claimed invention cannot be considered novel or cannot be considered to involve an inventive step when the document is taken alone
"Y" document of particular relevance; the claimed invention cannot be considered to involve an inventive step when the document is combined with one or more other such documents, such combination being obvious to a person skilled in the art
"&" document member of the same patent family

Date of the actual completion of the international search	Date of mailing of the international search report
20 September 2023	**21 September 2023**

Name and mailing address of the ISA/IL	Authorized officer
Israel Patent Office **Technology Park, Bldg.5, Malcha, Jerusalem, 9695101, Israel** **Israel** Telephone No. **972-73-3927212** Email: **pctoffice@justice.gov.il**	**NARGASI Ayelet** Telephone No.

C. DOCUMENTS CONSIDERED TO BE RELEVANT

Category*	Citation of document, with indication, where appropriate, of the relevant passages	Relevant to claim No.
A	EP 2363552 A1 (HAUFF TECHNIK GMBH & CO KG) 07 September 2011 (2011-09-07) the entire document	1-12
A	US 4619471 A (HARBEKE GEROLD J) 28 October 1986 (1986-10-28) the entire document	1-12

INTERNATIONAL SEARCH REPORT
Information on patent family members

International application No.
PCT/IL2023/050836

Patent document cited in search report	Publication date (day/month/year)	Patent family member(s)	Publication date (day/month/year)
DE 2615428 A1	20 October 1977	DE 2615428 A1	20 October 1977
CN 103836268 A	04 June 2014	CN 103836268 A	04 June 2014
WO 2017129747 A1	03 August 2017	WO 2017129747 A1	03 August 2017
		FR 3047291 A1	04 August 2017
		FR 3047291 B1	13 July 2018
EP 2696124 A1	12 February 2014	EP 2696124 A1	12 February 2014
		EP 2696124 B1	30 September 2015
		EP 2418410 A1	15 February 2012
		EP 2418410 B1	26 March 2014
		EP 2603722 A1	19 June 2013
		EP 2603722 B1	04 June 2014
		ES 2460875 T3	14 May 2014
		ES 2485372 T3	13 August 2014
		ES 2551628 T3	20 November 2015
		WO 2012020063 A1	16 February 2012
		WO 2012020063 A9	12 April 2012
KR 100992693 B1	05 November 2010	KR 20050002453 A	07 January 2005
		KR 100992693 B1	05 November 2010
US 4313286 A	02 February 1982	US 4313286 A	02 February 1982
		US 4453354 A	12 June 1984
EP 2363552 A1	07 September 2011	EP 2363552 A1	07 September 2011
		EP 2363552 B1	04 July 2012
		PL 2363552 T3	30 November 2012
US 4619471 A	28 October 1986	US 4619471 A	28 October 1986