Dec. 10, 1963 E. A. KAMP 3,113,325

CONVERTIBLE FURNITURE STRUCTURE

Filed March 24, 1961 3 Sheets-Sheet 1

Fig. 1.

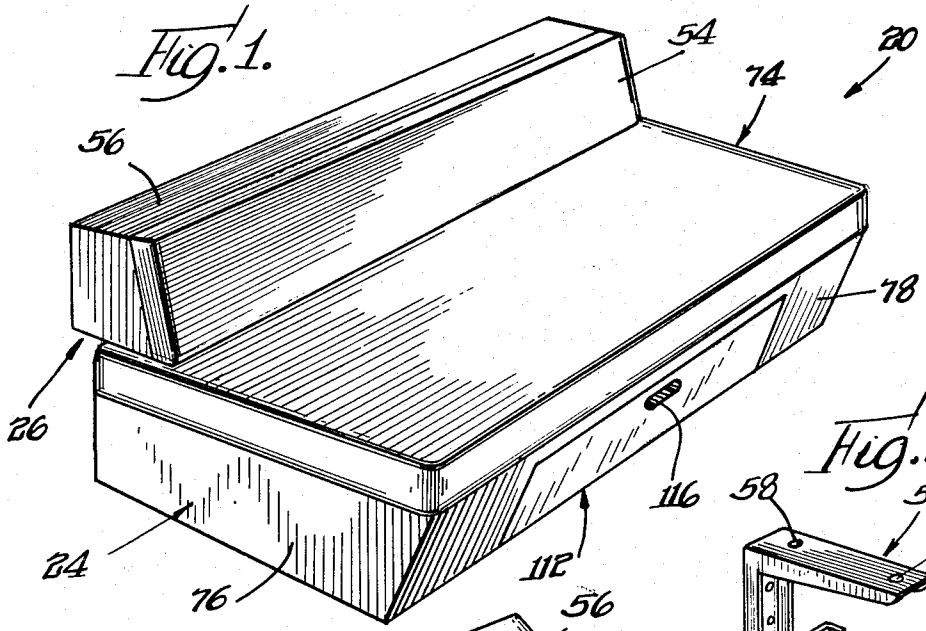

Fig. 3.

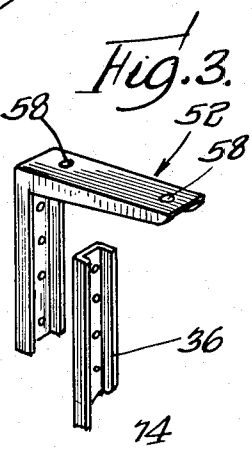

Fig. 2.

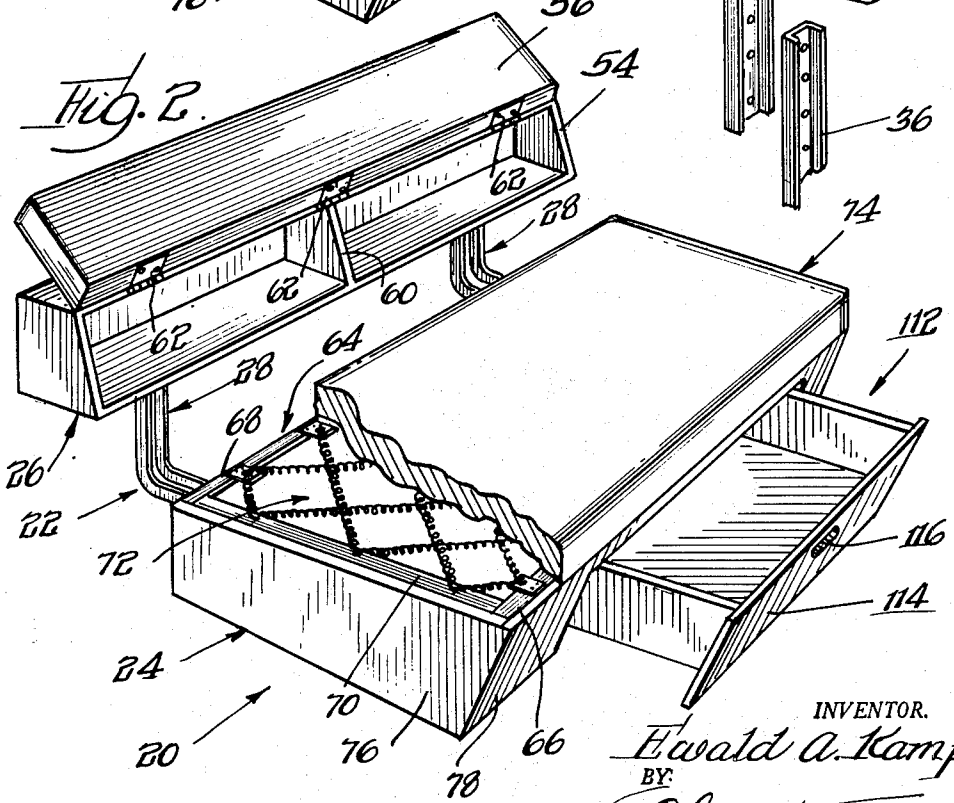

INVENTOR.
Ewald A. Kamp
BY:
Olson & Trexler
attys.

Dec. 10, 1963 E. A. KAMP 3,113,325

CONVERTIBLE FURNITURE STRUCTURE

Filed March 24, 1961 3 Sheets-Sheet 2

Fig. 4.

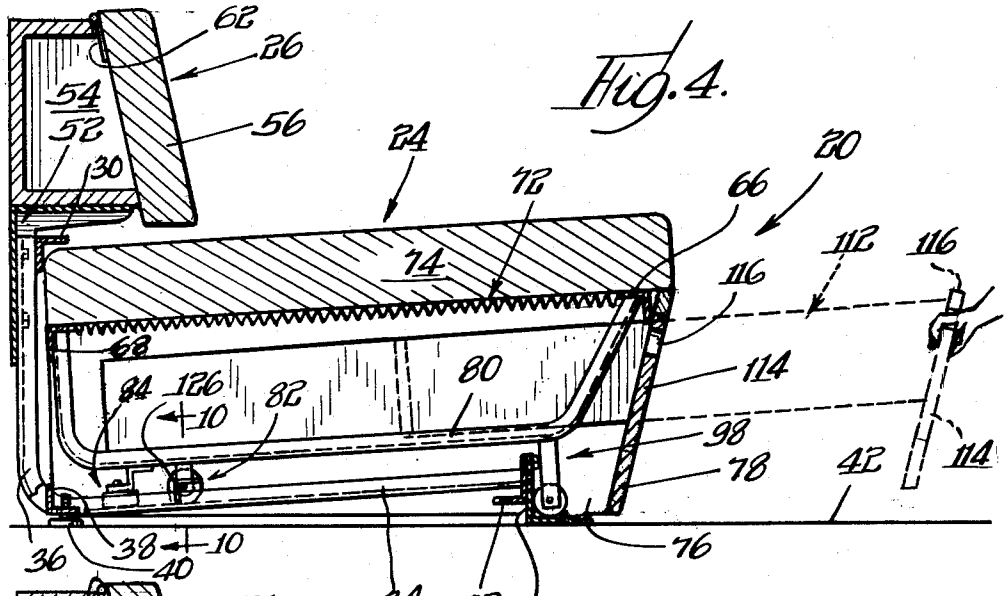

Fig. 5.

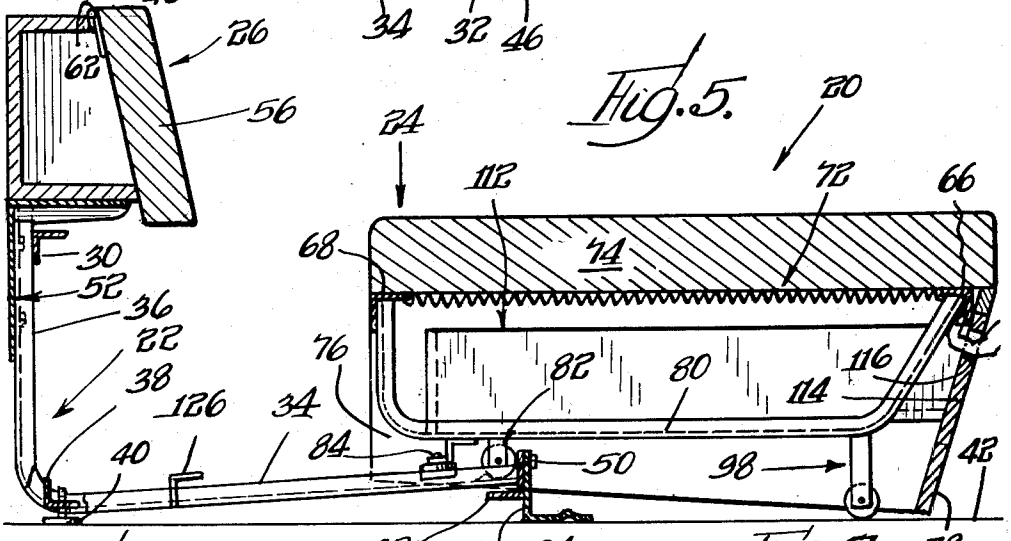

Fig. 6.

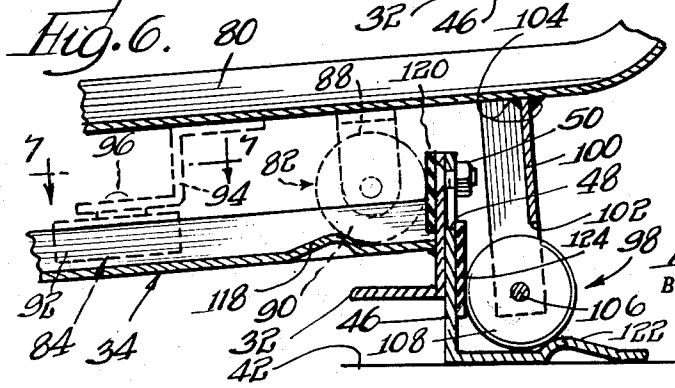

Fig. 7.

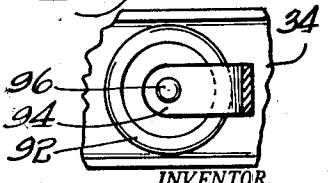

INVENTOR.
Ewald A. Kamp
BY
Olson & Trexler
Attys.

Dec. 10, 1963 E. A. KAMP 3,113,325

CONVERTIBLE FURNITURE STRUCTURE

Filed March 24, 1961 3 Sheets-Sheet 3

Fig. 8

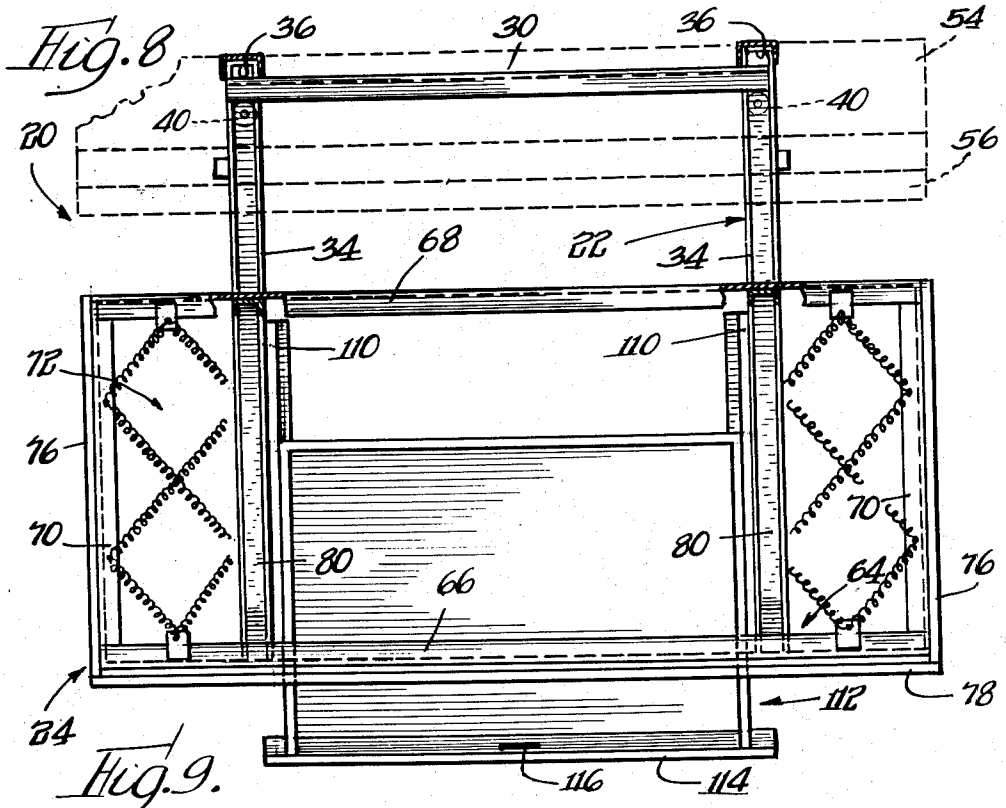

Fig. 9.

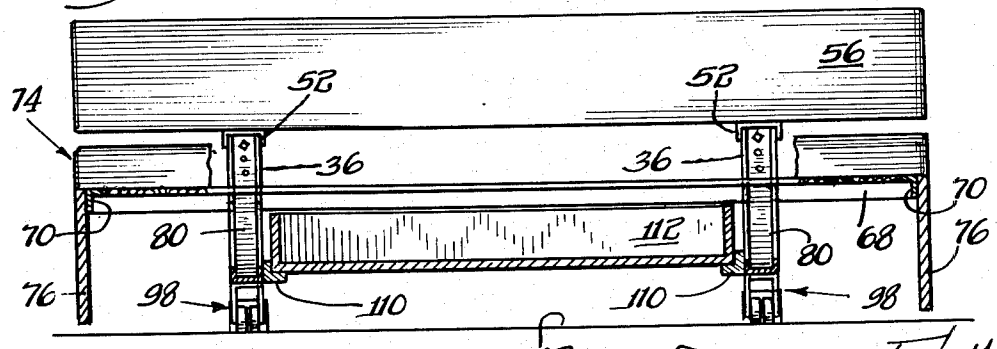

Fig. 10.

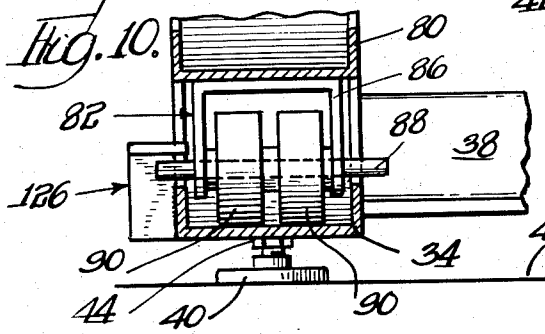

Fig. 11.

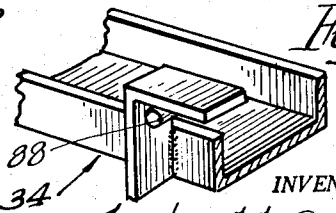

INVENTOR.
Ewald A Kamp
BY: Olson & Trifler
Attys.

United States Patent Office 3,113,325 Patented Dec. 10, 1963

3,113,325

CONVERTIBLE FURNITURE STRUCTURE

Ewald A. Kamp, Chicago, Ill., assignor to The Englander Company, Inc., Chicago, Ill., a corporation of Delaware

Filed Mar. 24, 1961, Ser. No. 98,123
1 Claim. (Cl. 5—17)

This invention relates generally to a convertible furniture structure and especially to a convertible furniture structure of particular utility in dormitories and the like.

In accordance with conventional practice, dormitories and the other highly efficient housing facilities allot only so much space and provide only so much furniture as is essential to the intended use of a given room or unit. For example, a school dormitory room intended for double occupancy ordinarily is furnished only with bunk beds, two desks and lighting fixtures. Under these circumstances, the lower bunk bed serves as a couch and for supplemental seating purposes. Such make-shift uses are not consistent with good housekeeping practice and do not provide a comfortable seating surface. Therefore, it has been proposed that a convertible furniture structure be devised to present a comfortable seat for daytime use and to present a comfortable bed for nighttime use.

An important object of the present invention is to provide such a convertible furniture structure.

A more general object of the invention is to provide a new and improved convertible furniture structure.

Another object of the invention is to provide a convertible furniture structure which is rigid and strong and in which the constituent assemblies assume a stable relationship.

Yet another object of the invention is to provide a convertible furniture structure which is characterized by positive positioning of a movable bedframe and a stationary framework.

Still another object of the invention is to provide a convertible furniture that is easy and convenient to use.

Additional objects and features of the invention pertain to the particular structure and arrangements whereby the above objects are attained.

A structure in accord with the invention includes a first plurality of roller members adapted to operate in tracks; a second plurality of roller members adapted to operate on a plane surface underlying the tracks; a bedframe superpositioned on the roller members with the second roller members being spaced a greater vertical distance from the bedframe than the first roller members; and a framework including upwardly opening channel members spaced laterally apart in fixed relationship to define parallel tracks for the first roller members, the bedframe bearing on the tracks through the first roller members to hold the framework in stationary position, the tracks being disposed at a rearwardly declining angle to cooperate with the spacing of the roller members relative to the bedframe in establishing a front-to-back declination of the upper surface of the bedframe when the bedframe is in one position and to cooperate with the spacing of the roller members in establishing a level attitude of the upper surface of the bedframe when the bedframe is in a different position.

In order that the principle of the invention may be readily understood, a single embodiment thereof applied to a convertible dormitory bed, but to which the application is not to be restricted, is shown in the accompanying drawings wherein:

FIG. 1 is a perspective view of a convertible furniture structure in accordance with the invention and illustrated in the daytime or couch-defining attitude;

FIG. 2 is a perspective view of the convertible furniture structure of FIG. 1 illustrating the nighttime or bed-defining attitude, the mattress being cut away to show

details of the spring structure, the storage drawer being shown in open position and the swingable bolster being pivoted to reveal the storage chambers in the brackets;

FIG. 3 is an enlarged perspective view of the angle bracket used to mount the backrest;

FIG. 4 is an enlarged side-elevational view of FIG. 1 taken in cross-section and showing the operation of the storage drawer in broken outline;

FIG. 5 is an enlarged, side-elevational view similar to the showing of FIG. 2 but illustrating the bolster closuring the backrest and indicating the method of operating the bedframe independently of the storage drawer;

FIG. 6 is a further enlarged, cross-sectional view taken in side-elevation showing in solid outline the means for releasably restraining the bedframe in the position of FIG. 4 and showing in broken outline the means for releasably restraining the bedframe in the position of FIG. 5;

FIG. 7 is a view taken along the line 7—7 of FIG. 6;

FIG. 8 is an overhead plan view similar to the showing of FIG. 2 but with the backrest illustrated in phantom and with the mattress removed to illustrate details of construction;

FIG. 9 is a front elevational view in partial section employing the scale used in FIG. 8;

FIG. 10 is an enlarged view taken through the section 10—10 of FIG. 4; and

FIG. 11 is an enlarged perspective view of the catch means used to secure the bedframe against forward tilting.

Referring now in detail to the drawings, specifically to FIGS. 1 and 2, a convertible furniture structure indicated generally by the numeral 20 will be seen to comprise a stationary framework 22, a bedframe 24 that is slidable relative to the framework 22, and a backrest 26 that is mounted on the framework to overlie a portion of the bedframe in the position illustrated in FIG. 1. The framework 22 is desirably fashioned from a metal such as low carbon steel and is arranged to include a pair of upwardly opening channel members 28 which take an overall L-shape, which have a U-shaped section and which are spaced laterally apart in a fixed relationship to define parallel tracks. Turning for the moment to FIG. 5, the framework 22 will be seen further to include an upper cross-piece 30 and a lower cross-piece 32 both fashioned from metal and rigidly secured to the channel members 28 by suitable means such as welding. The upper cross-piece 30 and the lower cross-piece 32 serve to establish and fix the disposition of the channel members 28. As will also be seen in FIG. 5, each of the channel members 28 includes a generally horizontal, track-defining portion 34 and a vertical, backframe-defining portion 36, the portion 36 upstanding from one end of the portion 34 at the rear of the furniture structure 20.

The framework 22 also includes a rear cross-piece 38 fixed between the channel members 28 in a position generally beneath the upper cross-piece 30. The cross-pieces 30, 32 and 38 advantageously taking the form of angle elements in order to incorporate rigidity in the framework 22. Adjacent the rear cross-piece 38, a pair of glide units or feet 40 is mounted individually to the channel members 28. The feet 40 are arranged to space the framework 22 above a floor or other similar surface 42, the feet 40 being threadedly engageable with the track-defining portions 34 in order that they may be vertically positionable for adjusting the elevation of the rear part of the framework 22. A locknut 44, as shown in FIG. 10, may be usefully employed in securing each of the feet 40 in a desired position.

The front ends of the track-defining portions 34 are also raised above the floor 42 being mounted to a toe plate 46, as is shown in FIGS. 5–6. The toe plate 46 advantageously takes the form of an elongated member of generally right-angular cross-section, the upstanding

portion of which is provided with vertical slots 48. A nut-and-bolt arrangement 50 is thereby capable of fastening the toe plate 46 to the lower cross-piece 32 in a vertically positionable relationship. Thus, the track-defining portions 34 may be raised and lowered with respect to the floor 42. Moreover, the track-defining portions 34 are disposed at a slight rearwardly declining angle for purposes which will become apparent hereinafter.

Continuing with reference to FIG. 5 and with supplemental reference to FIGS. 3 and 2, an angle bracket 52 will be seen fastened to the upper end of each of the backframe-defining portions 36, as by screws and nuts. The angle brackets 52 advantageously take channel form in order fittingly to receive the backframe-defining portions 36. The backrest 26 includes a storage structure 54 and a cushioned bolster element 56. The storage structure 54 is mounted to the brackets 52 in superposition therewith by means of screws, bolts or other fasteners cooperating with spaced bores 58 which are formed in the horizontal arm of the angle brackets 52 as is shown in FIG. 3. When the storage structure 54 is secured to the angle brackets 52, it overlies a portion of the framework 22 and, accordingly, overlies a portion of the bedframe 24 in the couch-defining position illustrated in FIGS. 1 and 4. The storage structure 54 is desirably fashioned from a furniture wood and is further provided with a suitable, decorative finish. Advantageously, one or more dividers 60 are mounted within the structure 54 as is shown in FIG. 2. It will be recognized that the storage structure 54 can be used to store books, toilet articles, bedding and clothes.

The cushioned bolster element 56 is vertically swingably mounted to the structure 54 as by hinges 62, the bolster element 56 providing a closure for the structure 54 and providing a cushioned rest for the back of a person sitting on the bedframe 24 when the furniture structure 20 is in the couch-defining position.

Turning now to FIGS. 2 and 8, the bedframe 24 is shown fashioned in customary single-bed dimensions comprising an upper, rectangular frame 64 including a front angle element 66, a back angle element 68 and side angle elements 70. Angle elements 66, 68, and 70 are advantageously fashioned from metal to be fastened together as by welding in order to provide a rigid structure. A network 72 of interconnected springs is tensioned within the rectangular frame 64 in order to provide a resilient support for a mattress element 74, the mattress element 74 taking any one of the well known types of mattress construction.

Surrounding the edges of the rectangular frame 64 on three sides and depending therefrom is a decorative wood housing comprising side plates 76 and a front plate 78. For appearance purposes, the plates 76 and 78 are ordinarily fashioned from the same type of wood and given the same decorative finish as the storage structure 54. In addition, it will be observed, with reference to FIGS. 4 and 5, that the front plate 78 is inclined downwardly and inwardly from the angle element 66. This is done in order to afford toe room at the front of the furniture structure 20. The side plates 76 are, on the other hand, situated in generally vertical planes.

The bedframe 24 also includes a pair of bowframe elements 80 fixed to the rectangular frame 64 in supporting relationship, the opposite ends of the bowframe 80 being secured specifically to the rear angle element 68 and to the front angle element 66, as is well shown in FIG. 5. It will be noted in FIG. 8 that the bowframes 80 are situated a substantial distance inwardly from the ends of the rectangular frame 64 overlying the track-defining portions 34. The rear portions of the bowframes 80 are supported on roller elements 82 for slidable action relative to the framework 22. The roller elements 82 ride in the tracks defined by the portions 34. Advantageously, guide roller elements 84 are also fixed to the bowframes

80 in depending relationship to operate in the tracks defined by the portions 34. It will be observed that the roller members 82 ride on the floor of the tracks for supporting the weight of the bedframe 24 whereas the guide rollers 84 engage the upstanding sidewalls of the portions 34 in order to ensure proper tracking of the bedframe when it is moved relative to the framework 22. It is to be noted that the weight of the bedframe 24 bears on the framework 22 through the roller members 82 in order to hold the framework in a stationary position on floor 42.

With particular reference to FIG. 10, a roller member 80 will be seen comprised of a U-shaped bracket 86 which supports an axle 88 spaced a predetermined distance beneath the bowframe 80. A pair of wheels 90 are rotatably mounted on the axle 88 in spaced apart relationship.

Returning for the moment to FIGS. 6 and 7, a tracking roller member 84 will be seen to include a wheel 92 which is rotatably supported on a bracket 94 by means of an axle 96. The bracket 94 takes an approximate Z-shape as is shown in FIG. 6, the upper arm of the bracket 94 being fastened to the bowframe 80 by suitable means such as bolts or welding. The wheel 92 is selected to be of a diameter approximating the transverse dimension of the floor of track-defining portion 34 in order to prevent yawing of the bedframe 24 relative to the framework 22 and to prevent concomitant sticking or jamming of the parts.

As will be seen in FIGS. 4, 5 and 9, the forward ends of the bowframes are supported on a second pair of roller members 98. The antifriction surfaces of roller members 98 are spaced a greater vertical distance from the bottom edge of the bowframes 80 than antifriction surfaces of the roller members 82 for a purpose to be described hereinbelow. Furthermore, the roller members 98 are adapted to operate principally on the floor 42 as is particularly well illustrated in FIG. 5. Turning now to FIG. 6, a roller member 98 will be seen to include a bracket 100 formed from channel iron and having a portion of the web cut away at the end 102. The bracket 100 is fastened to the bowframe 80 by means weldments 104; and an axle 106 is secured between the sides of the channel to receive two or more spaced-apart wheels 108.

As will be seen in FIGS. 8 and 9, a pair of wooden track elements 110 are fastened individually to the bowframes 80 in confronting relationship. The tracks 110 take generally right angular cross-section and are adapted slidably to support a storage drawer 112.

The drawer 112 is fashioned in a generally box-like form with the front end closed off by a front panel 114 which is disposed at the same angle as the front plate 78. The panel 114 is fashioned with a horizontal slot 116 for use in manually operating the drawer 112 and for manually pulling the bedframe 24 away from the backrest 26. With reference to FIG. 4, it will be observed that the insertion of a person's fingers through the slot 116 with the palm of the hand facing downward enables the person to grasp the panel 114 for operating the drawer 112. With reference to FIG. 5, it will be observed that the insertion of the person's fingers through the slot 116 with the palm of the hand facing upward permits the fingers to grasp the front angle 66 in order to pull the bedframe 24 away from the backrest 26. It is to be recognized that, when the bedframe 24 is pulled away from the backrest 26 into the position shown in FIG. 5, the convertible front furniture structure 20 assumes a bed-defining position.

For purposes of affording a more complete understanding of the invention, it is advantageous to provide at this juncture a functional description of the made in which the component parts thus far identified cooperate. Assuming that the parts are situated in the couch-defining position shown generally in FIGS. 1 and 4, it is to be

recognized that the convertible furniture structure 20 can be used as a seating facility. Because the track-defining portions 34 are disposed at a rearwardly declining angle and because the front roller members 98 are spaced apart a greater distance from the bowframes 80 than are the rear roller members 82, the upper surface of the bedframe and, therefore, the upper surface of the mattress 74 will be situated at a slight, rearwardly declining angle. Such a disposition of the seating surface has been found to create considerable comfort and it is, accordingly, a highly desirable arrangement. If a greater or lesser declination is desired, such can be achieved by vertically adjusting the glides 40 and the toe plates 46.

In the couch-defining position, the backrest 26 overlies a portion of the bedframe 24 extending the bolster element 56 into position for supporting the back of a person seated on the furniture structure. The weight of this person will be transmitted from the bedframe 24 to the framework 22 in order to cooperate with the weight of the bedframe itself in folding the framework 22 in stationary position. It will be observed that the front roll members 98 reside on the horizontal portion of the toe plate 46 in the couch-defining position, this being done to further the secural of framework 22 in a stationary position on the floor 42.

Spacing of the roller members 82 and 98 inwardly from the back and front edges of the bedframe 24, as shown, has proved advantageous in achieving the declination of the upper surface of the bedframe 24 in the couch-defining position. A slight additional accentuation of this declination is realized by situating the front roller members 98 on the horizontal portion of toe plate 46, the additional declination being achieved by virtue of the distance that the thickness of the horizontal portion raises the roller members 98 above the floor 42.

When it is desired to convert the structure 20 to the bed-defining position, it is only necessary for a person to reach his fingers through the slot 116 to grasp the channel element 66 as described hereinabove, thereafter pulling forwardly on the bedframe 24. As the bedframe 24 is pulled away from the backrest 26 the front roller members 98 will ride off of the horizontal portion of toe plate 46 and onto the floor 42 and the rear roller members 82 will ride along the floor of the track-defining portions 34 of framework 22. The guide rollers 84 ensure proper tracking of the bedframe 24 as it is thus being pulled out. Because of the inclination of the track-defining portions 34, the back of bedframe 24 is elevated as the bedframe is pulled out; and when the rear rollers 82 are situated adjacent the lower cross-piece 32, the upper surface of bedframe 24 will have assumed a generally level attitude in order to provide a comfortable sleeping surface.

The bolster element 56 and the drawer 112 may, of course, be operated freely and independently in either the couch-defining positions or in the bed-defining position.

When it is desired to reconvert the structure 20, the bedframe 24 need only be pushed in a direction toward the backrest 26, i.e. pushed from the position shown in FIG. 5 into the position shown in FIG. 4.

It has been found desirable to provide means for positively positioning the bedframe 24 in both the couch-defining position and the bed-defining position. Therefore, and in accordance with a feature of the invention, an upraised ridge or detent 118 is formed or bumped into each of the track-defining portions 34 adjacent the lower cross-piece 32 as is shown in FIG. 6. The detent 118 is spaced from the vertical plate portion of the lower cross-piece 32 sufficiently to trap the wheels 90 when the bedframe 24 takes the bed-defining position. Advantageously, a resilient bumper 120 is affixed to the vertical plate portion of cross-piece 32 to cushion the engagement of wheels 90. The bumper 120 may be fashioned from a number of suitable materials, various grades of rubber sheet having proved useful in this regard.

Similarly, an upraised portion or detent 122 is fashioned in the horizontal plate portion of toe plate 46 forwardly of the cross-piece 32 adjacent each of the channel members 28, the detents 122 trapping the wheels 108 of front roller members 98 against the vertical plate portion of the toe plate 46 when the bedframe 24 takes the couch-defining position. Resilient bumpers 124 are additionally secured to the front face of the vertical portion of toe plate 46 in order to cushion engagement between the toe plate and each set of the wheels 108. Resilient bumpers 124 are fabricated similarly to the resilient bumpers 120.

Spacing of the track-defining portions 34 horizontally inwardly from the ends of the bedframe 24 has been found to encourage proper tracking of the bed when it is being pulled out or pushed back. However, it has also been found necessary to provide catch means operative between the bedframe 24 and the framework 22 for securing the bedframe against tilting or tipping, particularly in the couch-defining position. Therefore and in accordance with a further feature of the invention, a catch 126 is fashioned in L-shaped form and secured to each of the track-defining portions 34 as is shown in FIGS. 10 and 11. Specifically, the catch 26 comprises an angle bracket fillet-welded to the exterior surface of a side member of the portion 34, a portion of the bracket extending horizontally and forwardly to receive the axle 88 of roller members 82 when the bedframe 24 takes the couch-defining position. As is shown in the drawings, the horizontal portion of catch 126 is spaced above the edges of portions 34 to permit free passage of the axle 88 upon resituations of the bedframe 24.

The specific example herein shown and described should be considered as illustrative only. Various changes in structure may occur to those skilled in the art; and these changes are to be understood as forming a part of this invention insofar as they fall within the true spirit and scope of the appended claim.

The invention is claimed as follows:

A convertible furniture structure comprising:

(*a*) a framework including a pair of channel members including upwardly extending back-defining portions integral with forwardly extending support portions with the channels opening upwardly, frame elements spacing said channel members laterally apart in fixed relationship to define parallel tracks and including a toe plate connected to the front ends of said channel members to locate the bottom portions thereof in upwardly and forwardly inclined position, said toe plate including a forwardly extending portion providing an upstanding detent;

(*b*) a bedframe adapted to be supported for movement between a couch-defining position and a bed-defining position;

(*c*) a first pair of spaced roller means depending a short distance from said bedframe and engaging the support portions of the upwardly opening channel members for guided movement therealong;

(*d*) a second pair of spaced roller means depending a longer distance from said bedframe and located forwardly of said first pair of roller means and in advance of said toe plate to engage a supporting surface;

(*e*) said first and second roller means being disposed a substantial distance horizontally inwardly respectively from the front and rear edges of said bedframe, said roller means and said channel members being disposed a substantial distance inwardly from the opposite ends of said bedframe whereby to minimize the span between said pairs of roller means and thus reduce tendency of the roller means to become misaligned with respect to the channel members;

(*f*) means providing a horizontally positioned guide

depending from said bedframe and located in one of said channel members to engage the opposite vertical walls of the support portion thereof to prevent lateral movement of the bedframe with respect to the channel members during movement of bedframe between couch-defining and bed-defining positions; the inclined support portions of said channel members cooperating with said first pair of roller means to incline the rear edge of the bedframe downwardly and rearwardly in couch-defining position with the second pair of roller means in engagement with the detent on the toe plate and to elevate the said rear edge of the bedframe to substantially horizontal position in bed-defining position;

(*g*) a bolster assembly mounted at the upper ends of the back-defining portions of said channel members; and

(*h*) a front plate portion carried by said bedframe at the forward edge thereof and inclined inwardly toward said toe plate affording toe room at the front of the furniture structure and having the lower edge

thereof disposed close to the supporting surface both in the couch-defining position and in the bed-defining position of the bedframe.

References Cited in the file of this patent

UNITED STATES PATENTS

863,365	Deimel	Aug. 13, 1907
2,436,546	Binenkorb	Feb. 24, 1948
2,628,367	Green	Feb. 17, 1953
2,642,584	Petersen et al.	June 23, 1953
2,784,419	Cimon	Mar. 12, 1957
2,786,212	Entwistle	Mar. 26, 1957
2,834,969	Wachsman	May 20, 1958
2,880,426	Goldstein	Apr. 7, 1959
2,904,796	Frey	Sept. 22, 1959
2,907,053	Fox	Oct. 6, 1959
2,943,333	Blecker et al.	July 5, 1960

FOREIGN PATENTS

72,050	Norway	May 5, 1947