Dec. 13, 1960 C. B. HEYER 2,964,368

KNOCK-DOWN TABLE SUPPORT FRAME

Filed Dec. 22, 1958

FIG. 1

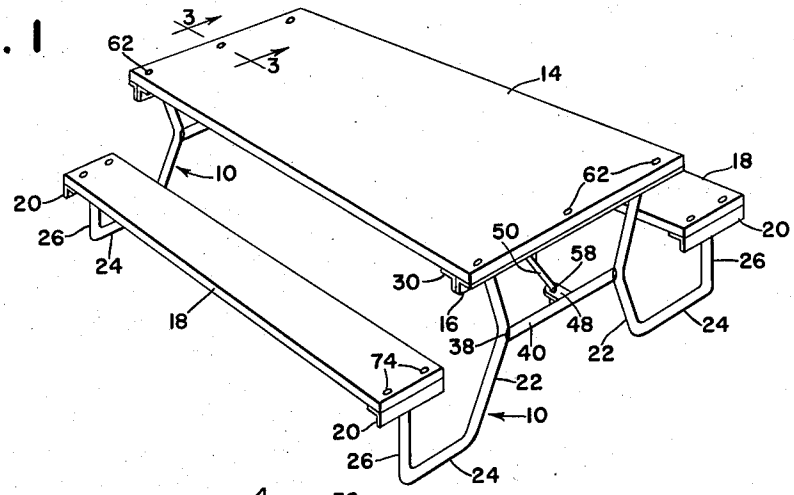

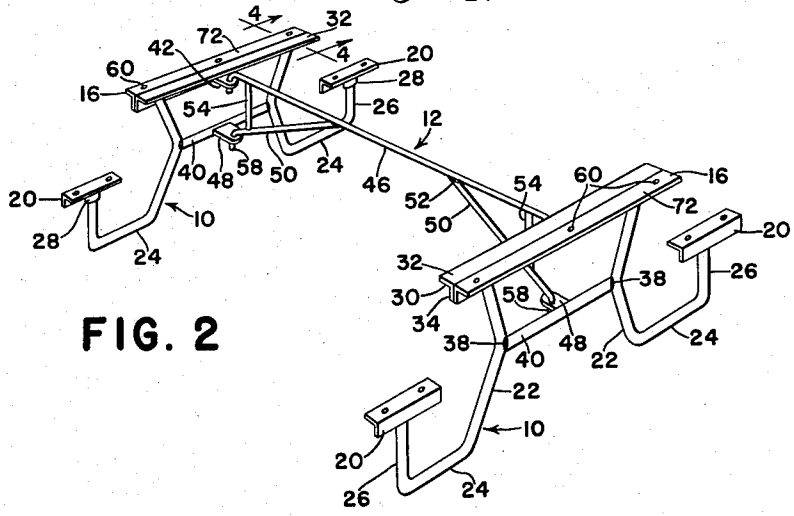

FIG. 2

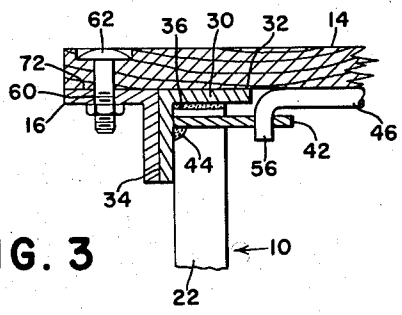

FIG. 3

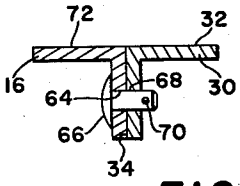

FIG. 4

INVENTOR.
C. B. HEYER

BY

ATTORNEY

United States Patent Office

2,964,368

Patented Dec. 13, 1960

1

2,964,368

KNOCK-DOWN TABLE SUPPORT FRAME

Clair B. Heyer, P.O. Box H, Milledgeville, Ill.

Filed Dec. 22, 1958, Ser. No. 782,043

3 Claims. (Cl. 311—35)

This invention relates to knock-down structures especially applicable in the field of pre-fabricated metal or equivalent sub-assemblies or components to which purchasers may contribute their own time, skills, and additional materials to complete the finished product, exemplary of which are picnic tables, ping pong tables, banquet tables, work tables and like structures involving the interconnection of a pair of more of upright spaced apart end elements to afford support for a top and related parts.

In the field of picnic and like tables, for example, numerous and varied attempts have been made in the past to achieve simplicity, economy and attractive appearance by the use of basic metal components to which wooden components may be added, but in most if not all of these, problems concerning shipment, disassembly for storage, etc. were overlooked or at best were only partially solved because the assembly of the prefabricated components was inextricably tied up with the added components. If the knock-down feature has heretofore been exploited at all with any degree of success, it has been largely at the expense of economy, rigidity and compactness.

According to the present invention, the past disadvantages are avoided while retaining known advantages and adding others in a simple assembly of prefabricated or equivalent upright end frames and a single brace frame which spans the end frames medially thereof. To this is added the feature of means whereby the three basic frames may be releasably interconnected in final position, and a subsidiary feature in this respect is the embodiment in said means of downwardly connectible and upwardly separable hook and socket devices among the frames whereby the end frames may be stood upright and the opposite ends of the brace frame simply hooked or dropped into place.

The invention features further means on the end frames for supporting a table top for example, and such means is so related to the brace means that when the table top is assembled and installed it automatically prevents upward separation of the hook and socket devices. In this regard, each end frame has a top-supporting bar to which the top may be assembled to form, with said bars, an essentially unitary panel which is removable and installable as a basic part of the whole multipart assembly. Further, the top bars are so related to the end frames that when assembled with the top and end frames the entire structure is rigidified by employing these bars and the inherent strength of the top, particularly against twisting about the vertical axes of the hook and socket means.

The foregoing and other important objects and desirable features inherent in and encompassed by the invention will become apparent as a preferred embodiment of the invention is disclosed, by way of example, in the ensuing description and accompanying drawing, the several figures of which are described below.

Figure 1 is a perspective of a completed table, a picnic table style being shown by way of example.

2

Figure 2 is a perspective of the basic frame structure for a table of the type shown in Figure 1.

Figure 3 is an enlarged section on the line 3—3 of Figure 1.

Figure 4 is an enlarged section on the line 4—4 of Figure 2.

The table structure chosen for purposes of illustration comprises a pair of similar upright end means or frames **10**, spaced apart in parallel upright planes and assembled with and maintained normally or usably in that relation by a single brace means or frame **12**. The completed assembly of the picnic table style shown here includes a table top **14**, means in the form of bars **16** (Figure 2) for mounting the top, seats **18**, and means in the form of supports **20** (Figure 2) for mounting the seats.

Each end frame is preferably although not necessarily constructed largely of tubular members welded together and as such has a pair of generally upright legs **22** shaped as shown at **24** to afford bottom portions adapted to rest on the ground or floor, and these portions are extended upwardly as standards **26** to receive sockets **28** rigid on the seat supports **20**. The particular type of mounting of the seats as to the sockets **28** is not claimed as new here, and in the broader aspects of the invention other seat mounts could be employed, and, in the case of tables of other types (e.g., ping-pong, banquet, etc), the seats and the mounts, as well as the portions **24—26** would be omitted.

The upper terminal ends of the legs are rigidly cross-connected by an upper horizontal member **30** which is of inverted L-shaped section to afford an upper flat surface or flange **32** and an integral depending vertical flange **34**. Here again the construction involves welding, as at **36** (Figure 3), and welding at **58** is used in the case of a lower transverse tubular member **40** which rigidly cross-connects the legs **22** at intermediate portions thereof. The particular shape of the legs shown here is to adapt the assembly to the picnic table style, but it will be clear that for ping-pong tables, work tables, etc. the portions **24—26** would be omitted, as already stated.

When the two end frames are stood up and temporarily held, with their bottom portions **22** resting on the ground or floor, their sides that face each other may be regarded at their inner sides and the opposite sides are of course their outer sides. The end frames being similar, the upper flanges **32** of the members **30** will be horizontally coplanar, with the depending flanges **34** of said members disposed at the respective outer sides of the frames. The cross members **40** will also be at a common level.

Each upper member **30** carries a vertically apertured element or lug **42** which is rigidly secured thereto centrally thereof and at the inner side of its end frame. Welding at **44** is shown as representative means for mounting the lug. The top surface of the lug is slightly below the upper surface **34** of the member **30**, preferably by a distance substantially equal to the vertical dimension of the upper portion of the brace frame **12**, which upper portion is here constituted by a bar **46**, preferably tubular. The lower cross member **40** of each end frame similarly rigidly carries a lower apertured element or lug **48** which is directly below and in vertical alinement with the respective upper lug **44**. These lugs comprise part of the means for detachably interconnecting the end frames **10** via the spanning brace frame **12**.

The brace frame is here in the form of a rigid truss-like structure made up of the top member **46** already described and a pair of downwardly and outwardly inclined diagonal parts **50**, rigidly secured to the member **46** as by welding at **52**, plus a pair of welded-in uprights **54**. The ends of the top member **46** are turned downwardly as upper hooks or pintles **56**, and a similar pattern is

followed to provide lower hooks or pintles **58** respectively on the free ends of the diagonal brace frame parts **50**. The pintles **56—58** at each end of the base frame are vertically coaxial and are further spaced apart on the order of the respective lugs **42** and **48** so as to be downwardly receivable by and upwardly separable from said lugs. Thus, with the end frames temporarily supported in upright positions, the pintles, cooperating with the lugs as hook and socket devices or means, may be readily connected to rigidify the three frames as a basic support, the brace frame diagonals **50** operating in brace fashion in this function.

It is a feature of this invention to additionally stabilize and rigidify the basic support by the addition of the table top **14** and its mounting bars **16**, particularly as respects the function of these components in preventing twisting of the end frames relative to the brace frame about the vertical axes of the hook and socket devices **56—42** and **58—48**. For this purpose, the mounting bars **16** are preferably angle bars and have their horizontal flanges apertured at **60** to receive a plurality of bolts **62**, or equivalent fasteners (Figures 1 and 3), for mounting the top **14**, which may be a single sheet of plywood, for example; although, here again, the details of the table top as such are not material. In addition, the vertical flanges of the bars **16** are apertured at **64** (Figure 4) to receive a plurality of pins **66** which pass through registering apertures **68** in the depending flanges **34** of the respective cross members **30**. The pins **66** may be of the type retained by cotters, as at **70**; although, any suitable removable fasteners may be employed.

Each mounting bar **16** is pre-assembled on the top **14** and paired with an upper member **30** so that their vertical flanges are back-to-back and their upper surfaces **32—72** are horizontally coplanar (Figure 4). Since, as previously described, the upper lugs **42** are spaced below the level of the surfaces **32—72** by the vertical thickness of the brace frame top member **46**, this member will have its upper edge coplanar, or substantially so, with the surfaces **32—72**. Hence, when the top **14**, previously assembled to the mounting bars **16** with the bars spaced to straddle the spaced upper members **30**, is placed in position, its underside will overlie the member **46** (Figure 3), and, when the pins **66** are in place, the bars **16** will be secured to the members **30** and the table top **14** will prevent upward displacement of the brace frame **12**, thus insuring the connection of the hook and socket means **56—42** and **58—48**.

Moreover, since the bars **16** and members **30** are back-to-back as respects their vertical flanges, a pair of substantial contact areas are in effect to rigidify the structure against twisting about the vertical axes of the hook and socket means, since the table top **14** is inherently rigid against "diamond" distortion. The seats **18** may be of suitable planks or the like secured to the seat supports **20** as by fasteners **74**.

It will be found that the completed assembly is light and sturdy and relatively easy to move, as by being skidded over the ground and floor because of the shape and contour of the bottom portions **24**. The structure may be readily assembled on the basis of the economically produced prefabricated components **10**, **12**, **16** and **20**, plus the fasteners **62** and **66** and the wooden elements required to make the seats and table top. Once assembled to the bars **16**, the top **14** and these bars may be handled as a unit and when removed by releasing the fasteners **66** will enable upward separation of the brace frame from the end frames via the hook and socket devices **56—42** and **58—48**, and the several subsections may be readily stored or transported.

The foregoing features, including the design of the structure with or without provision for the seats, will readily suggested to those versed in the art many other variations on the principles of the invention and the application thereof, all of which are to be regarded as falling within the spirit and scope of the invention.

What is claimed is:

1. A table structure, comprising: a pair of spaced apart upright similar end frames having bottom portions, each end frame having an inner side facing the other end frame, an opposite outer side and a transverse horizontal upper member of inverted L-shaped section affording a horizontal upper flange and an upright flange depending at said outer side, said upper flanges lying in a common horizontal plane; means on the inner side of each end frame and centrally thereof providing an upper vertically apertured element adjacent to and at a level below the proximate upper flange and a lower vertically apertured element spaced below and vertically alined with said upper element; a single brace frame extending between the end frames and having rigid thereon at each end thereof upper and lower depending pintles spaced apart vertically on the order of and downwardly receivable respectively in the apertured elements, said brace frame having an upper portion generally at the level of the upper flanges of said upper members; and means for supporting a table top on the end frames, including a pair of top bars positionable respectively parallel to and alongside the upright flanges of the upper members for rigid attachment to said members, said top bars respectively having upper surfaces in the plane of said upper flanges for carrying such table top with its under side in overlying relation to the brace member so as to prevent upward disconnection of said brace frame from the end frames.

2. A table structure, comprising: a pair of spaced apart upright similar end frames having bottom portions, each end frame having an inner side facing the other end frame, an opposite outer side and a transverse horizontal upper member affording a horizontal upper surface, said upper surfaces lying in a common horizontal plane; a single brace frame extending between the end frames generally in an upright plane normal to and centrally of the end frames and having opposite end portions respectively proximate to the inner sides of said end frames, said brace frame having an upper portion generally at the level of said upper surfaces; downwardly connectible and upwardly separable hook and socket means cooperative between the end portions of the brace frame and the inner sides of the respective end frames for removable interconnecting the three frames; and means for supporting a table top on the end frames, including a pair of top bars positionable respectively parallel to and alongside the upper members for rigid attachment to said members, said top bars respectively having upper surfaces in the plane of said upper surfaces of said upper member for carrying such table top with its under side in overlying relation to the brace member so as to prevent upward disconnection of said brace frame from the end frames.

3. A table structure, comprising: a pair of spaced apart upright similar end frames having bottom portions and each having an inner side facing the other of said end frames and each further having an opposite outer side; a single brace frame extending between the end frames generally in an upright plane normal to and centrally of the end frames and having opposite end portions respectively proximate to the inner sides of said end frames, and downwardly connectible and upwardly separable hook and socket means cooperative between the end portions of the brace frame and the inner sides of the end frames for removable interconnecting the three frames; means detachably mounted on the end frames at upper portions thereof for supporting a table top, said upper portions being at substantially the same level as the top of the brace frame so that a table top overlying said three frames presents its underside to said upper portions and to said top of the brace frame, and said detachable means including elements detachably secured

to said upper portions and connectible to such table top for preventing upward disconnection of the hook and socket means while the table top is in place.

References Cited in the file of this patent

UNITED STATES PATENTS

825,681	Rooney	July 10, 1906
1,395,166	Thomlison	Oct. 25, 1921
1,448,642	Thomlison	Mar. 13, 1923
1,671,736	Meeker	May 29, 1928
2,568,622	Hagan	Sept. 18, 1951
2,748,837	Beller	June 5, 1956
2,805,708	Bohn	Sept. 10, 1957
2,811,197	Nimmo	Oct. 29, 1957
2,849,053	Beller, et al.	Aug. 26, 1958