Aug. 29, 1933. J. L. BALCH 1,924,479

SCORE KEEPING DEVICE

Filed Aug. 22, 1930 2 Sheets-Sheet 1

Fig-1-

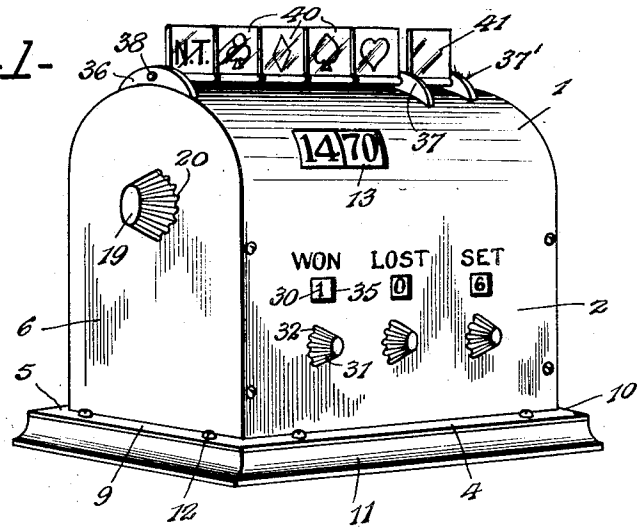

Fig-2-

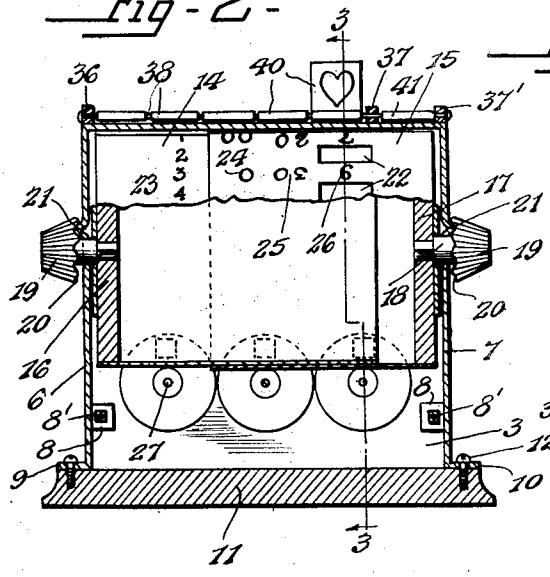

Fig-3-

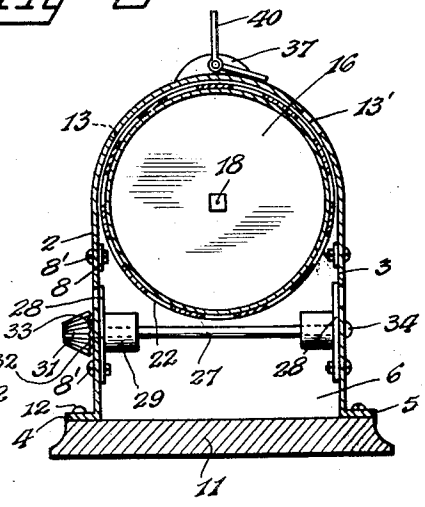

Inventor

John L. Balch.

By Lacey & Lacey, Attorneys

Aug. 29, 1933. J. L. BALCH 1,924,479

SCORE KEEPING DEVICE

Filed Aug. 22, 1930 2 Sheets-Sheet 2

Fig- 4-

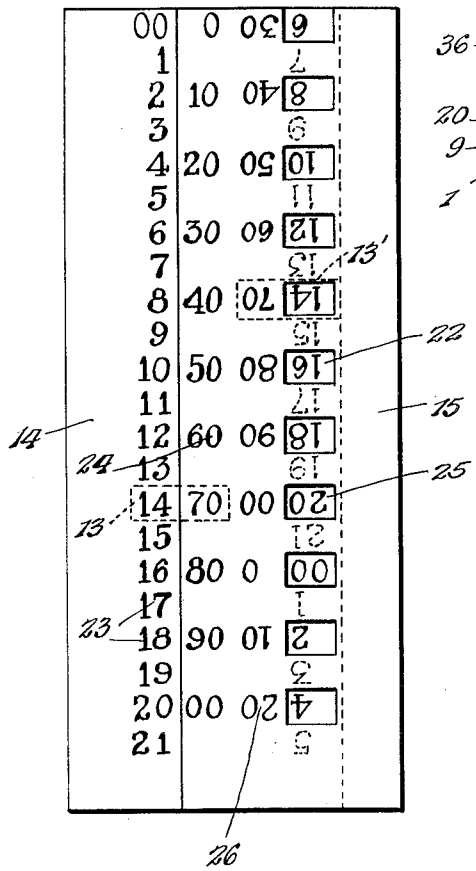

Fig- 5-

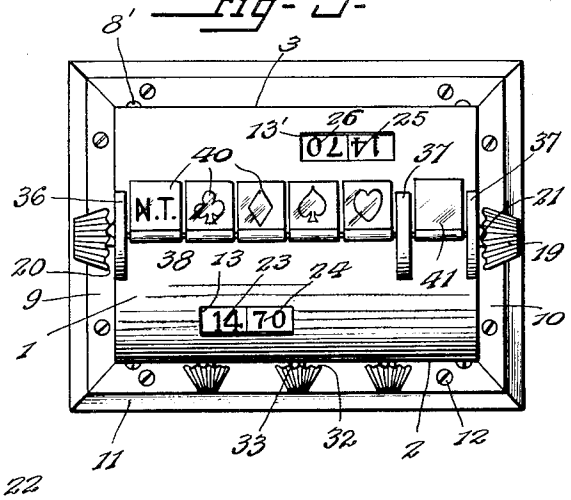

Fig- 6-

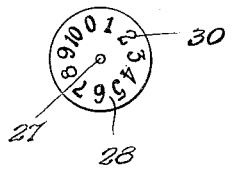

Inventor

John L. Balch.

By Lacey & Lacey, Attorneys

Patented Aug. 29, 1933 1,924,479

UNITED STATES PATENT OFFICE

1,924,479

SCORE KEEPING DEVICE

John L. Balch, Potlatch, Idaho

Application August 22, 1930. Serial No. 477,117

1 Claim. (Cl. 235—90)

This invention relates to an improved score keeping device for card games.

Heretofore players of the game of pinochle, in particular, have found it difficult to keep count of the score during a game so that it is sometimes not known when the required one thousand points have been accumulated. Failure to announce "game" when the thousand points have been attained, of course, results in the loss of the game for the person so failing to announce. Furthermore, a player, or partners, often desires to ascertain his standing during a game and, if mental count is kept, confusion often arises.

The present invention seeks, among other objects, therefore, to provide a score keeping device which will accurately register the score so that confusing mental calculations and the employment of pencil and paper may be dispened with.

Another object of the invention is to provide a device of this character employing adjustable visible indicators so that the score may be read at a glance.

A further object of the invention is to provide a score keeping device wherein means are utilized to permit ready adjustment of one of the drum indicators employed without moving the other of said drum indicators from a rotatably set position.

A still further object of the invention is to provide a score keeping device employing means for indicating trump and negative scores.

Other and incidential objects of the invention not mentioned in the foregoing will appear during the course of the following description.

The invention is illustrated in the accompanying drawings, wherein:

Fig. 1 is a perspective view of the device,

Fig. 2 is a longitudinal sectional view of the device and showing the drums employed partly in elevation,

Fig. 3 is a transverse sectional view of the device on the line 3—3 of Fig. 2 looking in the direction indicated by the arrows,

Fig. 4 is a diagrammatic view showing the blanks of the drums employed and the arrangement of the numbers imposed thereon,

Fig. 5 is a top plan view of the device, and

Fig. 6 is a detail elevation of one of the dial indicators employed.

Referring now to the drawings, the numeral 1 indicates a resilient sheet metal housing which is substantially inverted U-shape in cross-section and includes front and rear walls 2 and 3 which terminate at their lower ends in outwardly directed bottom flanges 4 and 5. Closing the ends of the housing are end walls 6 and 7 and formed on the side edges of the end walls are spaced ears 8 which are bent at right angles to overlie the front and rear walls 2 and 3 and are secured thereto by bolts 8'. The lower margins of the end walls are bent outwardly to form flanges 9 and 10 mating with the flanges 4 and 5. Closing the bottom of the housing is a removable base 11 formed preferably of heavy cast metal. The housing is secured to the base by means of screws 12 extending through the flanges 4, 5, 9 and 10. Formed in the housing near and equidistant from the top thereof are rectangular sight openings 13 and 13' and, as best seen in Fig. 5 of the drawings, these openings extend longitudinally in opposite directions from a medial transverse plane of the housing.

Mounted within the housing near the top thereof are relatively rotatable cylindrical drums 14 and 15 the shells of which are formed of heavy paper or other suitable material and are open at their inner ends. Closing said shells at their outer ends are heads 16 and 17. The shells are preferably formed from a blank and are adhesively or otherwise secured to the heads. Journaled through the end walls 6 and 7 are stub shafts 18 reduced and squared for tightly but removably fitting in axial openings in the heads 16 and 17. Formed integrally or otherwise mounted on the outer ends of the shafts are frusto-conical knobs 19 having serrations 20 and struck from the end walls 6 and 7 are detents 21 selectively engaging in the serrations for limiting the drums in a rotatably set position.

Formed in the shell of the drum 15 near the head 17 is an annular series of spaced rectangular openings 22. As best seen in Fig. 2 of the drawings, the shell of the drum 14 is somewhat longer than the shell of the drum 15 and overlaps the openings 22. Imposed upon the shell of the drum 14 near the head is an annular series of spaced numbers 23 reading from 0 0 to 21 inclusive in regular progression. Imposed upon the shell of the drum 15 near its inner end is an annular series of numbers 24 reading from 0 through 90 to 0 0 in steps of 10. The series of numbers 23 and 24 coact to produce various combinations forming numbers visible through the sight opening 13, the drums, of course, being relatively rotated with respect to each other for producing such numbers. Imposed upon the shell of the drum 14 near its inner end and inverted with respect to the series 23 is an annular series of numbers 25 reading from 0 0 to 21 inclusive. These numbers are disposed for selective registration with the openings 22. Imposed upon the shell of the

drum 15 immediately forwardly of the openings and inverted with respect to the series 24 is a series of numbers 26 reading from 0 through 90 to 0 0 in steps of 10. The series 25 and 26 cooperate to produce combinations forming numbers visible through the sight opening 13' when the drums are relatively rotated. As seen more clearly in Figs. 4 and 5 of the drawings, the series of numbers 23 and 24 are arranged in such a manner with respect to the series of numbers 25 and 26 that, when the drums are relatively rotated for producing from the series 23 and 24 a combination forming a given number visible through the sight opening 13, the same combination will be formed from the series 25 and 26 to product the same numbers visible at the sight opening 13'. In the instance shown in Fig. 4, the number 1470 is visible at both sight openings. Any desired combination within the limits of the series may be brought into registration by relative rotation of the drums.

Journaled through the front and rear walls 2 and 3 of the housing and extending transversely of said housing beneath the telescoping drums are shafts 27 preferably three in number. Fixed to the shafts within the casing and presented toward the front and rear walls 2 and 3 in close proximity thereto are dial indicators 28 having hubs 29 secured to the shaft, a pair of said indicators being carried on each shaft. As best seen in Fig. 6, a series of numbers 30 reading from 0 to 10 inclusive, is imposed upon the circumferential margin of each of the dial indicators. Mounted on the shafts 27 at corresponding ends outside the casing are frusto-conical knobs 31 having serrations 32, and struck from the front wall 2 of the housing are detents 33 for selectively engaging in the serrations and limiting the indicators in rotatably set position. The opposite corresponding ends of the shafts are upset as at 34 for limiting said shafts against longitudinal displacement through the wall 3. Formed in the front and rear walls 2 and 3 are sight openings 35 through which the numbers on the indicators may be seen, and, as shown more clearly in Fig. 1 of the drawings, the sight openings are just wide enough to show one number at a time upon each of the several indicators. Furthermore, each pair of indicators will simultaneously display identical numbers at a corresponding pair of sight openings in the front and rear walls of the housing. This is further made possible due to the fact that the numbers on the indicators facing forwardly are arranged in clockwise order while those of the indicators facing rearwardly are arranged in counter-clockwise order.

Soldered or otherwise secured to the top of the housing 1 are spaced arcuate upstanding supporting brackets 36, 37 and 37', one of said brackets being disposed at one end of the housing and an other of said brackets being disposed near the opposite end of said housing, while the third is disposed at said opposite end of the housing. Journaled through the brackets is a longitudinally extending shaft 38 and swingingly connected with the shaft are preferably five substantially square indicating flags 40. Connected with the shaft 38 between the brackets 37 and 37' is another flag 41. The flags 40 and 41 are more or less tightly fitted upon the shaft to frictionally coact therewith so that when the flags are swung upwardly, they will engage the shaft and thereby remain in upstanding or other position as long as desired.

Reading from left to right, the first flag carries at opposite sides thereof the representation of "no trump", the next flag, the representation of a club, the next flag, the representation of a diamond, the next flag, that of a spade, and the next flag, that of a heart, while the flag 41 carries a solid color, such as red, at opposite sides thereof.

In use, when it is desired to register a score, as for instance, the number of points gained by the meld of a "royal marriage" in the game of pinochle, which counts 40 points for the player so melding, the drums are rotated with respect to each other until the numerals 4 and 0 appear at the sight openings 13 and 13'. The player again "melds" and, this time, suppose he "melds" four aces of different suits, which count 100. He glances at the device and reads 40, or the value of his previous "meld". All he does is add the two and rotate the drums until the numerals 140 appear at the sight openings. This operation may be repeated after each "meld" so that the player always knows how his score stands without danger of confusion due to failure to remember results of previous "melds". When the "trump" suit is indicated, the flag 40 bearing the indicia of that suit is swung upwardly so that the player may, when desired, inform himself as to the trump suit, thereby preventing the loss of points or embarrassment which would otherwise be caused by failure to remember the "trump" suit. The flag 41 is swung upwardly when it is desired to indicate a minus score. The register of games lost, won, or "set backs", is kept by rotating the knobs 31 and thereby rotating the indicators 29 until the desired number appears at the sight openings on the front and rear walls.

Attention is directed to the fact that, inasmuch as sight openings and indicators are disposed at opposite sides of the housing, it will be possible for the players at opposite sides of the table to read the score of a game at a glance.

If it is desired to employ the device when playing the game of "five-hundred", the flag 40 bearing the indicia "no trump" is raised when necessary. The drums and dials may be rotated for producing desired scores in the same manner as in the game of pinochle except that the dials may be employed for indicating numbers less than 10, which would be added on the number appearing at the sight openings 13 and 13'. For example, it is desired to indicate the number 476; the drums are rotated until the number 470 is produced. Then one of the dials is rotated to indicate the numeral 6. If preferred, all three of the dials may be employed in lieu of the drums, inasmuch as the score never exceeds 500, or three digits.

Having thus described the invention, I claim:

A device of the class described including a casing having front, rear and end walls and a curved top wall, said end walls having detents struck therefrom and said top wall having a sight opening therein, a rotatable cylindrical drum carried within the casing, stub shafts journaled through the ends of the casing and rotatably mounting the drum within said casing, and knobs mounted on the stub shafts and having serrations adapted to selectively receive the detents for limiting the drums in a rotatably set position.

JOHN L. BALCH. [L. S.]