May 20, 1941. B. F. FLEGEL 2,242,517

AUTOMATIC ELECTRIC TIME SWITCH

Filed Aug. 31, 1940 2 Sheets-Sheet 1

Fig. 1.

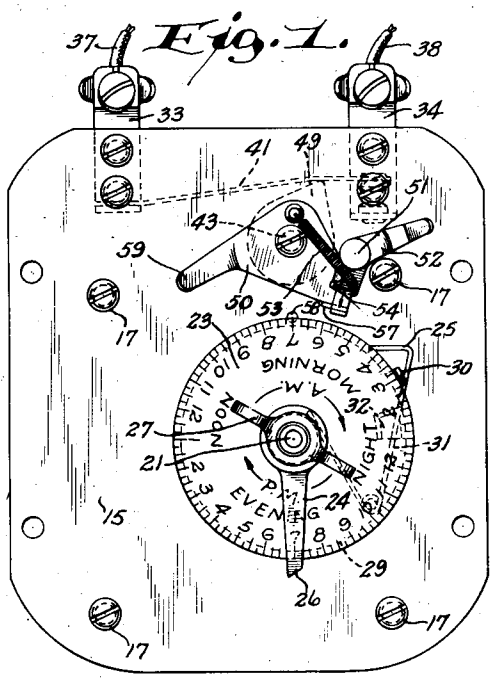

Fig. 2.

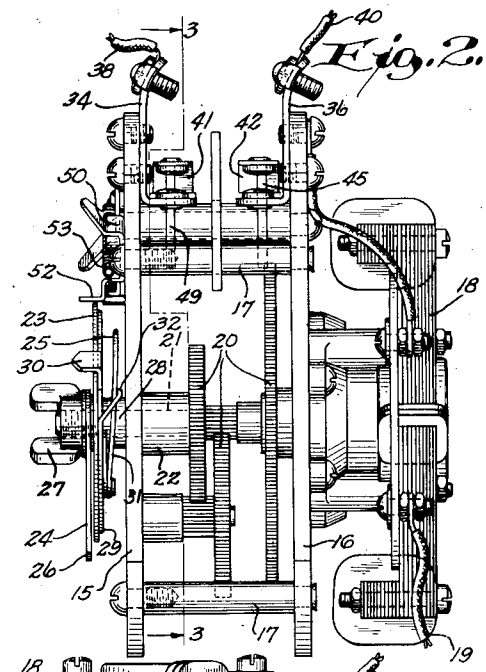

Fig. 4.

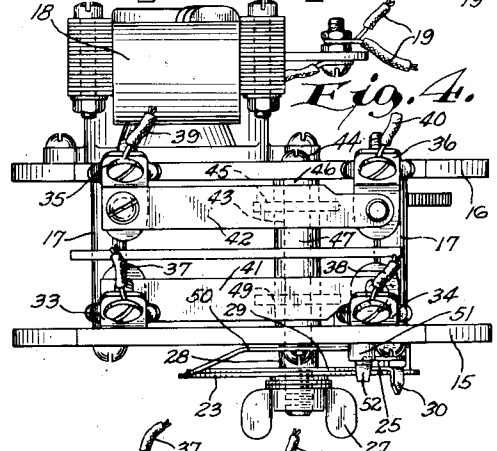

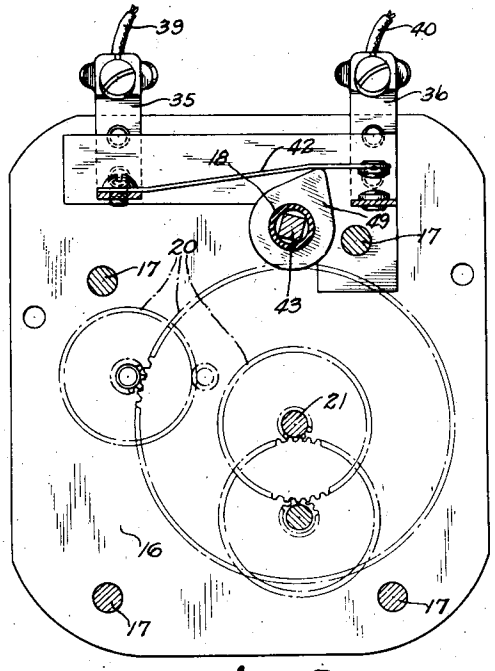

Fig. 3.

Fig. 5.

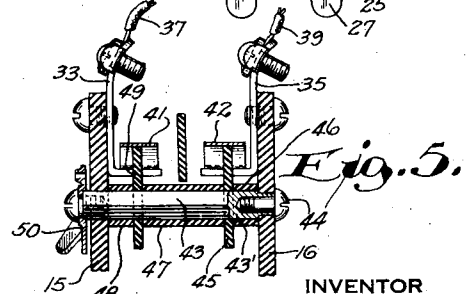

INVENTOR
Benjamin F. Flegel,
BY
Morsell, Lieber & Morsell
ATTORNEYS.

May 20, 1941. B. F. FLEGEL 2,242,517

AUTOMATIC ELECTRIC TIME SWITCH

Filed Aug. 31, 1940 2 Sheets-Sheet 2

Fig. 6.

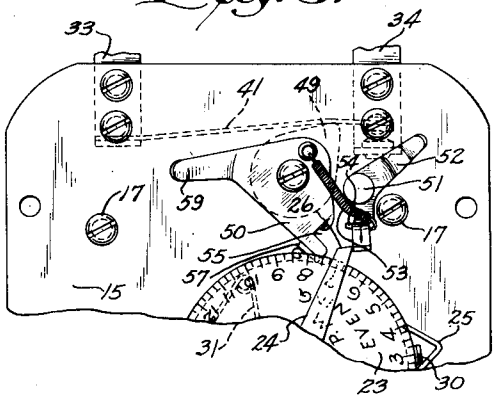

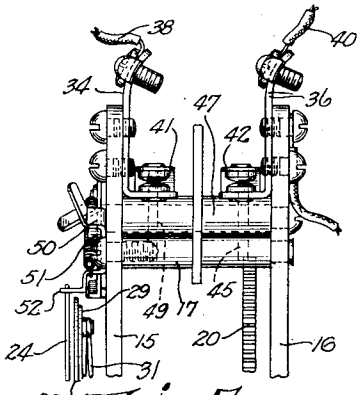

Fig. 7.

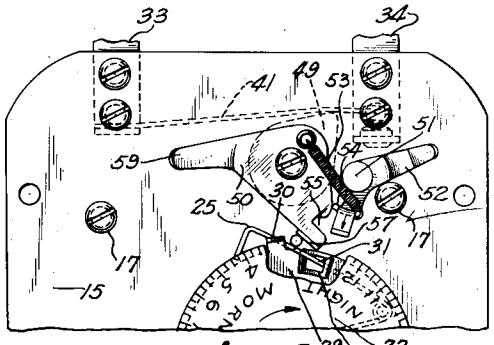

Fig. 8.

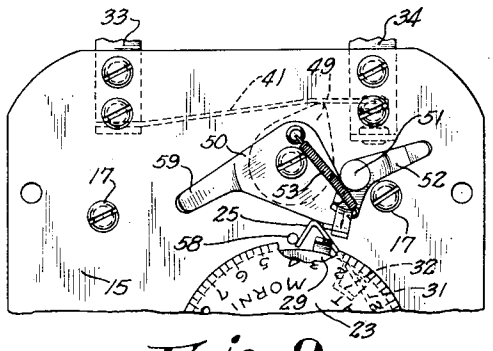

Fig. 9.

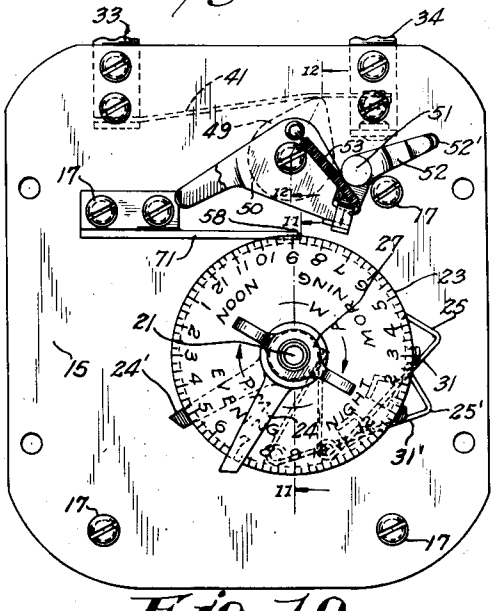

Fig. 10.

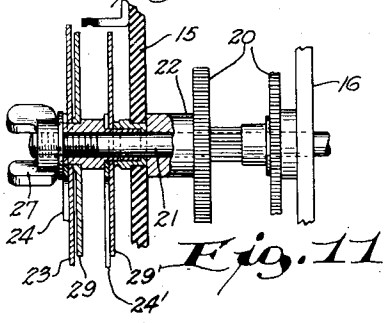

Fig. 11.

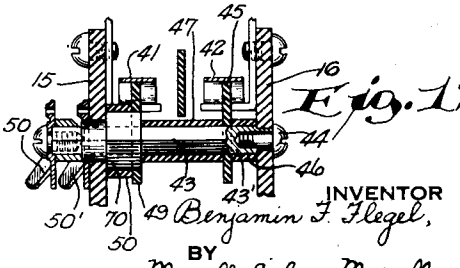

Fig. 12.

INVENTOR
Benjamin F. Flegel,
BY
Morsell, Lieber & Morsell
ATTORNEYS

Patented May 20, 1941

2,242,517

UNITED STATES PATENT OFFICE

2,242,517

AUTOMATIC ELECTRIC TIME SWITCH

Benjamin F. Flegel, Racine, Wis.

Application August 31, 1940, Serial No. 354,921

5 Claims. (Cl. 200—39)

This invention relates to improvements in automatic electric time switches.

Automatic time switches are employed to control electric circuits for the lights of store show windows, sign boards, etc. The common form of time switch now in use will control one or two circuits, but for two-circuit control a single switch, according to standard practice, could only function to control the two circuits simultaneously and identically. Within the contemplation of the present invention, when the time switch is constructed for the control of two circuits, it can be adjusted to automatically independently control both of said circuits in a plurality of combinations of modes and sequence of operation.

A general object of the present invention is to provide an improved automatic electric time switch in which the contact actuating members are put under compression prior to the operation of the same, with the result that when the contact actuating members are operated they move very rapidly and with considerable force.

A further object of the invention is to provide, in an automatic electric time switch structure, means whereby the compression elements for the contact actuating members will not stick and refrain from operating.

A further object of the invention is to provide an automatic electric time switch wherein extremely fine settings may be attained and wherein the contact actuating elements may be set for any time within a relatively short period of the desired time of operation.

A further object of the invention is to provide an automatic electric time switch wherein the contact actuating members are automatically put under compression by means which generate an unusual amount of power without undue strain on the motor for the clock mechanism.

A further object of the invention is to provide an automatic electric time switch in which the spring or compression elements for the contact actuating members are carried fast by undersurface portions of the time dials.

A further object of the invention is to provide an automatic time switch in which the mechanism may be manually operated at any time without affecting the time control of the switch.

A further object of the invention is to provide an electric time switch, either for single or multiple circuits, which is extremely compact and simple mechanically and which builds up and ultimately releases power with a minimum of effort and wear on the moving parts.

A further object of the invention is to provide an automatic electric time switch which is of very simple construction, is strong and durable, is simple to adjust and operate, is inexpensive to manufacture and install, and which is well adapted for the purposes set forth.

With the above and other objects in view, the invention consists of the improved automatic electric time switch, and its parts and combinations as set forth in the claims, and all equivalents thereof.

In the accompanying drawings in which the same reference characters indicate the same parts in all of the views:

Fig. 1 is a front view of the improved time switch with the parts in one position of adjustment;

Fig. 2 is a side view of the switch with the parts in the position of adjustment of Fig. 1;

Fig. 3 is a vertical sectional view taken on line 3—3 of Fig. 2;

Fig. 4 is a plan view of the switch;

Fig. 5 is a fragmentary transverse vertical sectional view of the upper portion of the switch mechanism;

Fig. 6 is a fragmentary front view of the switch in a position of adjustment different from that shown in Fig. 1;

Fig. 7 is a fragmentary side view of the showing in Fig. 6;

Fig. 8 is a fragmentary front view of the switch in still another position of adjustment;

Fig. 9 is a fragmentary front view of the switch with the dial advanced slightly beyond the position of Fig. 8 and showing the relative position of the operating members;

Fig. 10 is a front view of a modified form of the improved electric time switch adapted for two-circuit control;

Fig. 11 is an enlarged fragmentary detail sectional view taken on line 11—11 of Fig. 10; and

Fig. 12 is an enlarged fragmentary detail sectional view taken on line 12—12 of Fig. 10.

Referring first more particularly to the form of the invention shown in Figs. 1 to 9 inclusive, it will appear that the numerals 15 and 16 indicate respectively front and rear plates, formed of insulating material, on and between which the switch mechanism is mounted. Said plates are held together in spaced, parallel relation by transverse posts or studs 17. In practice the entire frame and mechanism carried thereby may be enclosed by a suitable casing (not shown) and the device is mounted vertically wherever convenient.

Mounted on the outer face of the rear plate 16 is an electric clock mechanism 18 which receives electricity from any convenient electrical outlet (not shown) through circuit wires 19. A driven shaft in the clock mechanism 18 extends through the rear plate 16 and by means of a series of reduction gears, designated generally by the numeral 20, a clock dial shaft 21 is revolved in a clock-wise direction. Said clock dial shaft 21 is journalled in a suitable bearing 22 and extends through the front plate 15.

The shaft 21, forwardly of the front plate 15, adjustably revolubly carries a clock dial 23 and the same is graduated in a counter-clockwise direction from twelve noon to twelve midnight through one hundred and eighty degrees of the dial surface, and through the remainder of the dial surface the graduations extend from twelve midnight to twelve noon. There are also suitable quadrant markings to represent "noon," "evening," "night" and "morning."

Adapted to cooperate with the dial 23 are a pair of operating members including a "time-on" arm 24 and a "time-off" lug 25. The arm 24 is mounted adjacent the outer face of the dial and its beveled end portion 26 projects beyond the periphery of said dial. The inner end of said arm is apertured and is adjustably mounted on the clock dial shaft 21 inwardly of a clamping winged nut 27 which is threaded onto the outer extremity of the shaft 21.

Adjustably mounted on the shaft 21 adjacent the inner face of the dial 23 against a suitable spacing collar 28 is a disc 29 having a projecting and out-turned peripheral flange 30 to register with a selected dial graduation. A wire spring 31 is medially pinned to the disc 29 with one leg thereof impinging against the shaft collar 28. The other leg of said spring extends movably through an apertured lug 32 on the disc 29 and terminates beyond the peripheries of the disc 29 and dial 23 in the afore-mentioned "time-off" lug 25. It will thus be obvious that when the winged nut 27 is released, the dial 23, disc 29, and hand 24 may all be independently adjusted on the shaft 21 to properly locate the same. An adjustment of the disc 29 (manipulated through the lug 30) is effective to adjust the "time-off" member 25 as the spring 31 is carried by said disc. When the nut 27 is tightened the dial, disc, hand, and lugs are clamped relative to the shaft, by virtue of the clamping collars, and all of said members on the shaft 21 will turn therewith.

The circuit to be controlled by the improved switch mechanism includes contact arms 33 and 34, and if desired, another circuit for similar and simultaneous operation and control may include contact arms 35 and 36. Contact arms 33 and 34 are secured to separated inner upper wall portions of the front plate 15, while the contact arms 35 and 36 are secured to separated inner upper wall portions of the rear plate 16. Circuit wires 37, 38, 39 and 40 have their extremities engaged by binding posts on the upper portions of the members 33, 34, 35 and 36 respectively. Spring metal switch elements 41 and 42 are secured at their inner ends to the lower angled portions of the members 33 and 35. The outer ends of the elements 41 and 42 are adapted to make and break contact with the angled ends of the members 34 and 36. In this form of the invention, utilizing two circuits, the same are opened and closed simultaneously. Also, if desired, one of the circuits may be dispensed with.

Extending through the front plate 15, somewhat above the dial 23 and in vertical alinement with the shaft 21, is a squared shaft 43. The inner end portion of the squared shaft 43 is reduced and rounded, as at 43' (see Fig. 5), and extends revolubly through a circular opening therefor in the rear plate 16. A screw 44 is threaded into said end portion of the shaft 43 to retain the same relative to the plate 16.

For the purpose of actuating the switch element 42 of the circuit which includes the wires 39 and 40, a cam 45 is mounted on an inner portion of the squared shaft 43, a central portion of said cam having a squared opening to receive said shaft portion. On said shaft 43, between the cam 45 and the inner face of the plate 16, is a spacing collar 46. On the other side of said cam 45 the shaft 43 carries a longer spacing collar 47. On a more forward portion of the shaft 43, between the forward end of the spacing collar 47 and another spacing collar 48 is a circuit operating cam 49. Said cam has a squared opening to receive the squared shaft 43. The forward end of the shaft 43 is reduced and extends through an opening therefor in the front plate 15. The projecting portion of said shaft has fast thereon a circuit operating disc 50.

Extending transversely through the front plate 15 adjacent the operating disc 50, and above the dial 23, is a stud shaft 51 on the outer end of which is mounted a bell-crank lever 52. Said bell-crank lever is revoluble relative to the stud shaft 51, but is connected with the disc 50 by means of a spring 53 which is connected respectively with one arm on the bell-crank lever and a peripheral portion of the control disc 50. The lever 52 has its inner extremity flanged outwardly so as to lie in the path of movement of the "time-on" arm 24. The same arm of the lever 52 is provided with a lug 54 adapted, under certain conditions, to lodge in a shoulder recess 55 in the disc 50 to hold said disc against undesired rotation. An edge portion of the disc, adjacent the recess 55 is provided with an edge flange 57 with the result that when the disc moves in a clockwise direction its range of movement will be limited by abutment of the flange 57 with a pin 58. One side of the circuit control disc 50 carries an extension arm 59 for convenience in manual manipulation of said disc.

When the improved automatic time switch is to be utilized for the making and breaking of one or two similar circuits (and in the case of two circuits, simultaneous operation of the same), the circuit wires 37 and 38 may extend to and include electric lights in one show window, for instance, and the circuit wires 39 and 40 will extend to and include the electric lights in an adjacent show window. Let it be assumed that the lights in both show windows are to be turned on at 7:00 p. m. and are to be turned off at 3:00 a. m. It may also be assumed that the particular time of day is 5:30 a. m. All of these conditions are represented by the adjustments of the dial, hand and lug depicted in Fig. 1. The tension spring 53 is holding the bell-crank lever 52 in a position in which its lug 54 engages in the control disc recess 55, whereby the control disc is held under tension in an advanced counter-clockwise rotated position. In this position the elongated portions of the operating cams 45 and 49 are in engagement with the yieldable switch elements 41 and 42 and hold the contact ends of the same in raised circuit breaking positions.

Obviously, therefore, the circuits to the show windows will be broken.

At this point is may be stated that notwithstanding the operation of the clock mechanism to drive the dial **23**, the switches may be manually independently operated if it becomes necessary to open or close the circuits before the times for which the mechanism is set for automatic operation. To this end, the outer arm of the bell-crank lever **52** may be manually manipulated to swing said lever so as to release the lug **54** from the disc recess **55**, whereupon the spring **53** will rotate the disc **50** in a limited clockwise direction until stopped by engagement of the lug **57** with the pin **58**. Such movement of the operating disc **50** will cause a similar rotation of the shaft **43** and consequent movement of the cams **45** and **49**. Likewise, the arm **59** on the disc **50** provides means whereby the disc may be manually turned in a desired direction.

With the conditions shown in Figs. 1 to 5 inclusive, and with the setting of the mechanism as described, the circuits are open and the lights in the show windows are off. With the electric clock mechanism driving the dial **23** through the medium of the gears and shafts, said dial will turn slowly in a clockwise direction. When 7:00 in the evening is reached the beveled end of the "time-on" arm **24** will engage the angled end of the bell-crank lever **52**, and as the movement of the dial continues said bell-crank lever will be moved so as to disengage its lug **54** from the disc recess **55**. This will be against the tension of the coiled spring **53** and the pull exerted by said spring will cause the disc **50** to move in a clockwise direction, upon being released, to the position of Figs. 6 and 7, in which position its movement is limited by the pin **58**. The consequent movement of the squared shaft **43** is such as to move the high sides of the cams **45** and **49** away from the yieldable contact elements **41** and **42** with the result that said contact elements will snap into engagement with the fixed contacts **34** and **36**. Accordingly, the circuits will be closed and the lights in the windows will be illuminated. Upon rotation of the dial **23** slightly beyond that shown in Fig. 6 the beveled end of the arm **24** will snap clear of the angled end of the bell-crank lever and the bell-crank lever will assume the position shown in Fig. 8.

As the clock dial **23** moves toward 3:00 a. m. one side of the operating lug **25** of the spring **31** will ride along a side of the pin **58** and said spring **31** will be compressed and retracted thereby, in the manner shown in Fig. 8. This action serves to put the lug **25** under compression for quick, positive and effective snap-action. Also, the compression action on the spring **31** takes place at a period very close to the time at which the mechanism is to be tripped to break the circuits and consequently close settings of the mechanism are possible with the elimination of strain on the dial driving elements. Upon further movement of the time dial **23** to reach the desired setting of 3:00 a. m. such advancement of the dial will cause the spring lug **25** to snap clear of the pin **58**, striking the flange **55** on the control disc **50**. This very quickly oscillates the control disc **50** and elements associated therewith in a counter-clockwise direction to an extent to cause the bell-crank lever lug **54** to snap into the disc recess **55** whereby the position of Fig. 9 is attained. Further advancement of the time dial **23** causes the lug **25**, riding along the portion **55** of the disc, to compress slightly and ultimately snap beyond said disc for subsequent operation. Upon manipulation of the disc **50** and in the manner just described, the high portions of the cams **45** and **49** will again be projected against the yieldable switch elements **41** and **42** to cause the same to break the circuits.

In Figs. 10, 11 and 12 of the drawings a modification of the invention has been illustrated wherein the switch mechanism is equipped so as to independently control two circuits in any of a plurality of sequence of operations. For this form of switch all of the mechanism is the same as that described in connection with the principal form of the invention except that the projecting end of the main shaft **21** carries fast thereon, in spaced relation, a pair of "time-off" discs **29** and **29'** (see Fig. 11). The time dial **23** which is adjacent the outermost disc **29** has associated with its outer face a first circuit "time-on" hand **24** while adjacent the inner disc **29'**, and projecting outwardly beyond the periphery of all of said discs, is a second circuit "time-on" hand **24'**. The outermost disc **29** carries the yieldable angled spring **31** having the projecting "time-off" lug **25**, while the inner disc **29'** has adjacent thereto a similar spring **31'** terminating in a second circuit "time-off" lug **25'**. From Fig. 11 it will be apparent that when the winged nut **27** is released the various discs may be turned on the collars on the shaft **21** so as to adjust the hands and lugs relative to the time dial. The hand **24'** on the disc **29'** is independently adjustable to obtain different settings of the hand **24'** and lug **25'** relative to the settings of the first circuit hand **24** and its lug **25**. When the winged nut **27** is tightened it will be apparent that the various discs, the dial and the hands will turn jointly in a clockwise direction when the clock mechanism is operating.

This modified form of the invention likewise requires a pair of independent bell-crank levers **52** and **52'** independently movably mounted on the stud shaft **51**. Also, a pair of superimposed and separated circuit controlling discs **50** and **50'** are necessitated. These discs **50** and **50'** are independently mounted on different extended portions of the squared shaft **43**. As shown in Fig. 12 the outer disc **50** is secured directly to the shaft **43** so that movements of said disc will directly turn the shaft and the first circuit controlling cam **45** which is directly on the shaft. The second circuit controlling cam **49** is on a sleeve **70** surrounding a forward portion of the shaft **43** and an extended portion of said sleeve **70** has the second circuit operating disc **50'** carried thereby.

By virtue of the arrangement described a movement of the outermost disc **50** is effective to directly oscillate the shaft **43** and thereby actuate the cam **45** for the first circuit. This movement does not affect the inner disc **50'**, the sleeve **70**, nor the cam **49**. However, a movement of the disc **50'** will cause independent movement of the cam **49** to control the contact element **41** of the second circuit.

When this arrangement of the modified construction is used for a pair of independent circuits for separate show windows a variety of settings or combinations are attainable. As depicted in Fig. 10 the first circuit is set to be closed at 5:00 p. m. and opened at 1:00 a. m. The second circuit is set to be closed at 7:00 p. m. and opened at 3:00 a. m.

It is not necessary to describe the complete operation of the modified structure but it may

be stated that the several bell-crank levers and operating discs are manipulated by the sets of hands and yieldable lugs. When 5:00 in the evening is reached the innermost hand 24' will ride under a bar 71 and will kick the lug on the extremity of the innermost bell-crank lever 52' to cause release and clockwise oscillation of the inner disc 50'. This will close the circuit controlled by the element 41 as movement of the forward cam 49 is accomplished. Thereafter, at 7:00 p. m. the outermost hand 24 will kick the outermost bell-crank lever 52 to cause oscillation of the outermost disc 50, turning of the shaft 43, and movement of the cam 45 to close the other circuit. Subsequent independent opening of the two circuits is accomplished first by the innermost spring lug 25' snapping and oscillating in a counter-clockwise direction, the innermost disc 50', followed at the proper time by similar operation of the outermost disc 50 by the spring lug 25. It may be stated that in this form of the invention the innermost spring lug 25' is put under tension by engagement with the pin 58 while the outermost spring lug 25 is put under compression by engagement with the surface of the bar 71.

The foregoing explanation of the operation of the modified form of automatic time switch has relation to a certain proposed setting of the controlling hands and lugs. Many more combinations or schedules of operation are possible including the following operation of circuits:

First circuit on—second circuit on—both circuits off simultaneously

Both circuits on simultaneously—first circuit off—second circuit off

First circuit on—second circuit on—first circuit off—second circuit off

First circuit on—first circuit off and simultaneously second circuit on—second circuit off

First circuit on—first circuit off—second circuit on—second circuit off

First circuit on—second circuit on—second circuit off—first circuit off

The improved automatic time switch is a unitary structure of simplified and effective mechanism which operates very forcefully and with snap-actions. While the switch is automatic in its operation it is also susceptible of manual manipulation when it becomes desirable. The automatic time switch is of simple construction and is well adapted for the purposes described.

What is claimed as the invention is:

1. An automatic time switch, comprising a time mechanism having a movable time indicating dial, a yieldable switch element included in and controlling an electric circuit, snap-action mechanism associated with said switch element for operating the latter, and means for initiating movement of said mechanism upon movements of the time dial to predetermined positions, said means including an arm and a yielding compression lug, both of which are adjustably associated with said dial for movement therewith.

2. An automatic time switch, comprising a time mechanism having a movable time indicating dial, a yieldable switch element included in and controlling an electric circuit, snap-action mechanism associated with said switch element for operating the latter, and means for initiating successive reverse movements of said mechanism during continued movement of the time dial, said means including a trip arm and a yielding and compressible trigger lug, both of which are adjustably associated with said dial for movement therewith.

3. An automatic time switch, comprising a time mechanism having a rotatable time indicating dial, a yieldable switch element included in and controlling an electric circuit, snap-action mechanism associated with said switch element for operating the latter, means for initiating successive reverse oscillations of said mechanism during continued rotation of the time dial, said means including a trip arm and a yielding and compressible trigger lug, both of which are adjustably associated with said dial for rotation therewith, and means engaging said lug to compress the same during a certain movement of the dial, the lug being released by said means and expanding upon further movement of the dial.

4. A time switch, comprising a switch member, switch moving means, a switch controlling disc, a latch lever, tension means extending between the latch lever and the disc, a clock, a time dial driven by said clock, means adjustably associated with said dial for movement therewith for disengaging the disc and latch lever for one operation of the switch, and tensioned means also adjustably associated with said dial for movement therewith for engaging the disc and latch lever for another operation of the switch.

5. An automatic time switch, comprising a time mechanism having a movable time indicating dial, two sets of arms and trigger lugs moving with said dial, said arms and trigger lugs being adjustably secured in selected positions relative to the dial, a movable switch element for controlling one electric circuit, a second movable switch element for controlling a second electric circuit, means between one arm and one trigger lug and the first switch element whereby movement of said arm and said lug with the dial will close and open said switch element, means between the other arm and trigger lug and the second switch element whereby movement of the latter arm and lug with the dial will close and open the second switch element, the means for actuating each switch element including an oscillatory member, a cam moved thereby, a pivotal latch lever for temporarily holding the oscillatory member under tension in one position, the latch lever extending into the path of movement of an arm and being released by engagement therewith, the oscillatory member extending into the path of movement of a trigger lug and being snapped into latch lever engaging position by movement and expansion of said trigger lug, and means for putting the trigger lugs under compression during a portion of the range of travel of the time dial.

BENJAMIN F. FLEGEL.