Jan. 12, 1965 J. T. GONDEK 3,164,959

HYDRAULIC SYSTEMS

Filed May 3, 1963 2 Sheets-Sheet 1

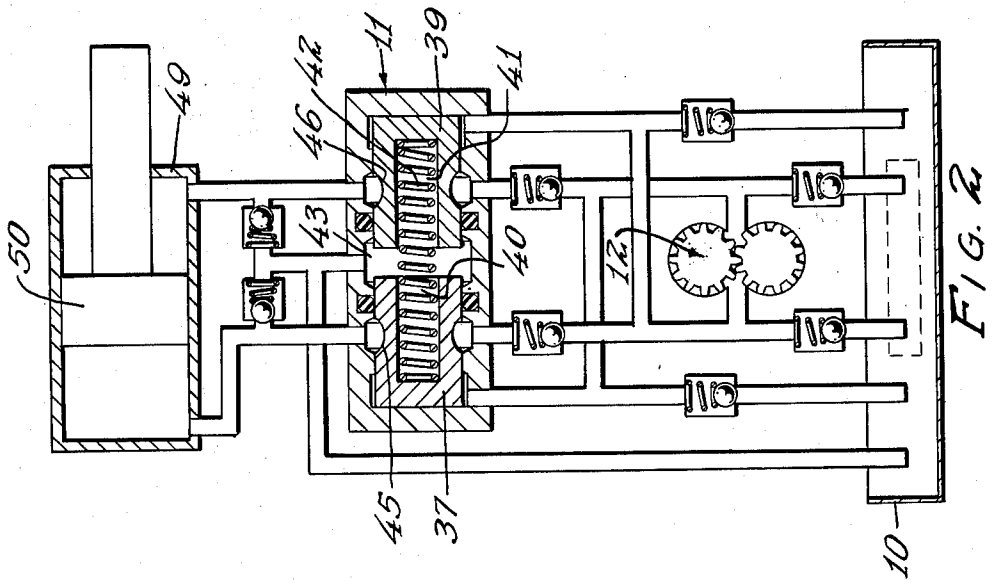

FIG. 2

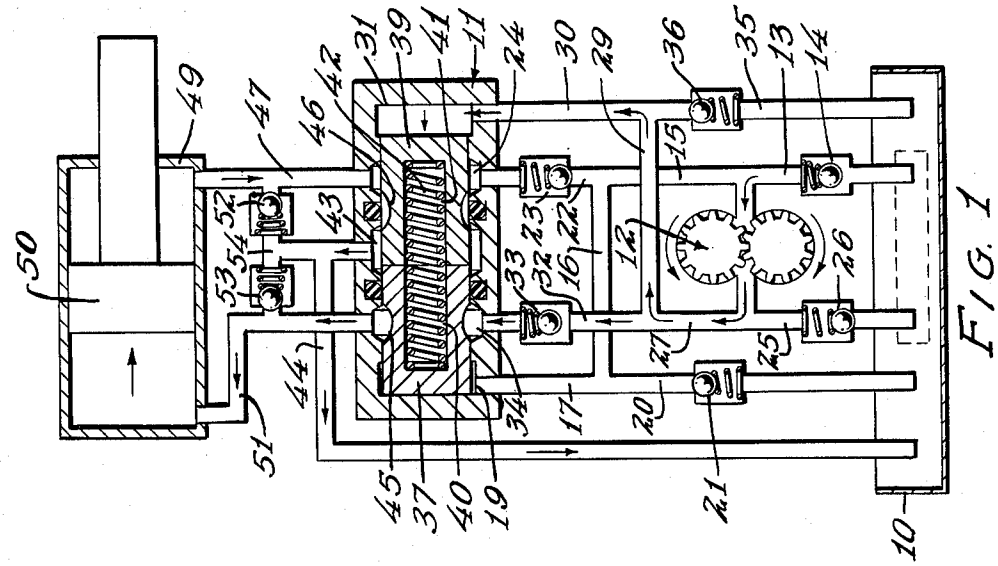

FIG. 1

INVENTOR

JOHN T. GONDEK

BY Robert M. Dunning

ATTORNEY

Jan. 12, 1965 J. T. GONDEK 3,164,959

HYDRAULIC SYSTEMS

Filed May 3, 1963 2 Sheets-Sheet 2

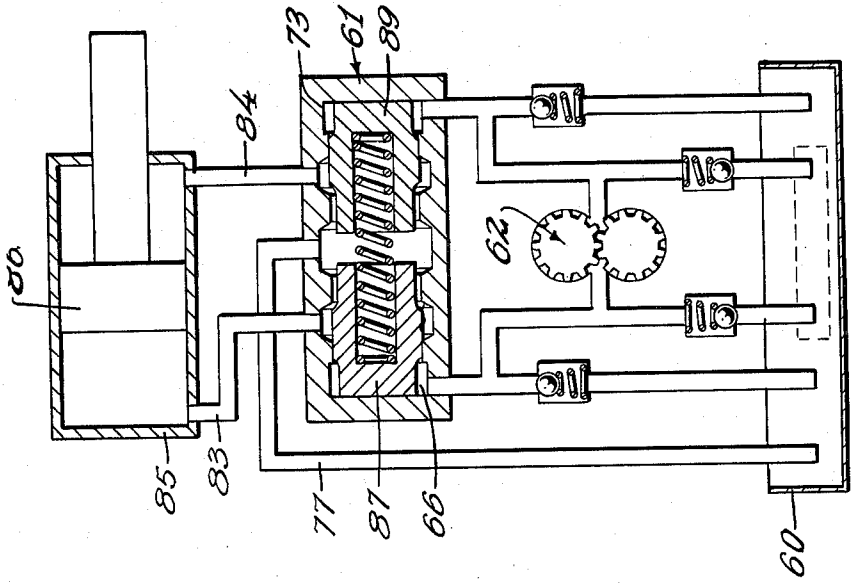

FIG. 4

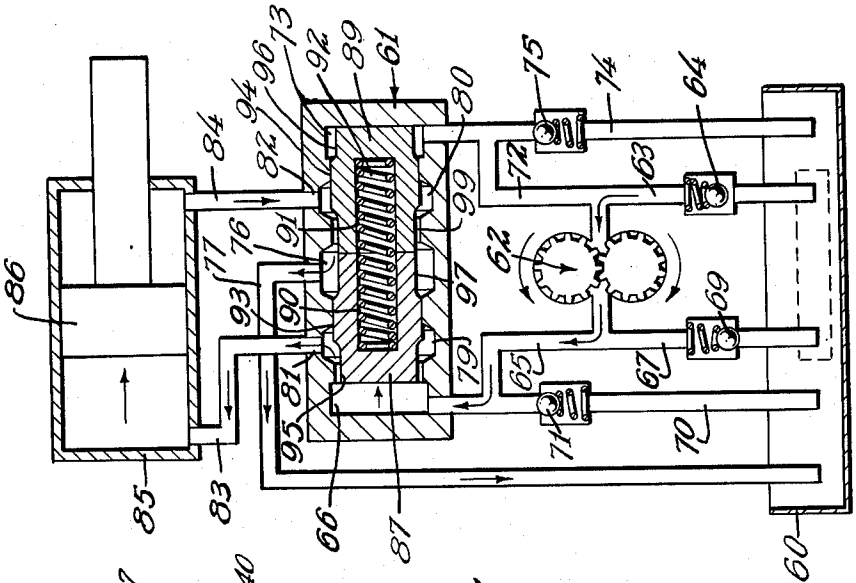

FIG. 3

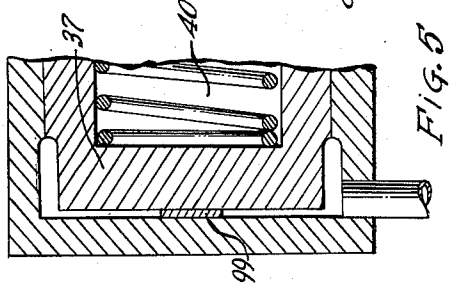

FIG. 5

INVENTOR

JOHN T. GONDEK

BY Robert M. Dunning

ATTORNEY

United States Patent Office 3,164,959 Patented Jan. 12, 1965

3,164,959

HYDRAULIC SYSTEMS

John T. Gondek, Minneapolis, Minn., assignor to Oil-Dyne, Inc., Minneapolis, Minn., a corporation of Minnnesota

Filed May 3, 1963, Ser. No. 277,776
9 Claims. (Cl. 60—52)

This invention relates to an improvement in hydraulic systems and deals particularly with a simple and effective means of controlling the operation of a work cylinder.

Various means have been provided for controlling the operation of a work cylinder by a reversible pump or similar reversible fluid supply means acting through a control valve. For the most part, these valves have comprised single pistons which are constructed to control a series of ports to accomplish the operation. For example, in my previous Patent 2,916,879, issued December 15, 1959, I disclose an arrangement of the type described incorporating a valve cylinder including a slidable valve piston and including springs for centering the valve piston when it is not subjected to hydraulic pressure.

While my previous construction has always functioned very effectively, I have found that the arrangement can be simplified by providing a pair of pistons which are slidable in a valve cylider and which are urged apart toward the ends of the cylinder by a single spring. This arrangement has definite advantages over my previous construction in view of the fact that there is no need to equalize the action of the two springs. In other words, in my previous construction, it was at least desirable that the two springs be of equal strength so that the piston would be properly centered when not in operation. With the present arrangement, the expansion of the spring is automatically equalized against the two pistons, thus avoiding all necessity for adjustment.

A feature of the present invention resides in the fact that, by simple rearrangement of the parts, the apparatus may be made either to lock the work cylinder in a fixed position, or to release the piston in the work cylinder when the pump is not in operation so as to permit the movement of the piston in either direction.

These and other objects and novel features of the present invention will be more clearly and fully set forth in the following specification and claims:

In the drawings forming a part of the specification;

FIGURE 1 is a diagrammatic view of a hydraulic system, showing one position of operation.

FIGURE 2 is a view similar to FIGURE 1 showing the pump in a different operation.

FIGURE 3 is a modified form of hydraulic system showing the parts in one operative position.

FIGURE 4 is a view similar to FIGURE 3 showing the parts in a different operative position.

FIGURE 5 is an enlarged sectional view through an end of one of the cylinders and an adjoining piston.

In general, the apparatus includes a reservoir 10, a valve cylinder 11, and a reversible pump 12. One side of the pump 12 is connected by a conduit 13, to the reservoir 10, the conduit 13 including a check valve 14. The pump 12 is indicated as a gear pump, and when the pump is rotating in the direction of the arrows in FIGURE 1, fluid is drawn upwardly through the conduit 13 and past the check valve 14. The conduit 13 also includes an extension 15 which extends through a transverse connection 16 to a conduit 17 leading to a chamber at one end 19 of the cylinder 11. The conduit 17 is also connected to the reservoir 10 through a conduit 20 including a pressure relief valve 21 which opens only when the pressure in the system exceeds a predetermined maximum.

The conduit 15 is also connected by a conduit 22 including a check valve 23 to a port 24 which actually comprises an internal groove in the wall of the cylinder 11. The port 24 comprises one of two ports in the wall of the cylinder, as will be later described.

The hydraulic system is similar on the opposite side of the pump 12. The outlet of the pump 12 (when rotating in the direction indicated) is connected by a conduit 25 leading to the reservoir 10 and including a check valve 26 which is closed when the conduit 25 is subjected to pump pressure. The pump outlet is also connected to a conduit 27 leading through a transverse connection 29 to a conduit 30 leading to a chamber at the end 31 of the cylinder 11. The conduit 27 is also connected by a conduit 32 including a check valve 33 to a second port 34 which actually comprises an internal groove on the wall of the cylinder 11. The pressure conduit 30 is also connected to a pressure relief line 35 including a relief valve 36 which also opens only when the system is subjected to abnormal pressure.

The cylinder 11 includes a pair of similar valve pistons 37 and 39 which are independently slidable. The two pistons are provided with opposed axial sockets 40 and 41 respectively which support a spring 42 which normally urges the pistons 37 and 39 toward the ends of the cylinder 11 as indicated in FIGURE 2. The cylinder 11 is also provided with a central internal groove 43 which communicates with a return line 44 leading to a reservoir 10. The pistons 37 and 39 are externally grooved as indicated at 45 and 46, respectively, these grooves being of sufficient width to form a communication between the grooves 24 and 34 and the central groove 43 when the pistons are in the proper location within the cylinder. In FIGURE 1 of the drawings, the groove 46 is shown connecting the port groove 24 with the central groove 43.

The port 24 is connected by a conduit 47 to one end of a work cylinder 49, the work cylinder including a reciprocable piston 50. The other end of the work cylinder 49 is connected by a conduit 51 to the port 34 in the valve cylinder. Relief valves 52 and 53, which may be of the thermo-expansion type, are interposed between the conduits 47 and 51 and a conduit 54 forming an extension of the return line 44.

The hydraulic system operates as follows: When the system is not in operation, and the pump 12 is not in operation, the spring 42 will force the pistons 37 and 39 toward the ends of the valve cylinder 11. However, when the pump 12 is operated in the direction illustrated, fluid is drawn from the reservoir through the conduit 13 past the check valve 14, and into the conduit 27. The return flow to the reservoir 10 is prevented by the check valve 26. The fluid under pressure passes through the conduits 29 and 30 to the chamber at the end 31 of the cylinder 11, moving the piston 39 to the left and compressing the spring 42. At the same time, fluid under pressure flows through the conduit 32 past the check valve 33 and into the port 34. The port 34 is continuously connected to the conduit 51 leading to one end of the work cylinder 49, and the piston 50 is moved to the right in the direction of the arrow in FIGURE 1.

Movement of the piston 39 to the left into the position illustrated in FIGURE 1 permits the fluid to the right of the piston 50 in the cylinder 49 to flow through the conduit 47 and through the external piston groove 46 to the central groove 43 which is connected by the return line 44 to the reservoir 10. Thus the operation of the pump 12 will continue to move the piston 50 to the right until it reaches the end of its stroke or until it is turned off. If the pump continues operation after the piston 50 has reached the end of its stroke, the relief valve 36 is free to open and to return the fluid to the reservoir. The bypass of fluid to the reservoir may also take place through

the relief valve 53. When the operation of the pump valve is stopped, the spring 42 will return the valves to the position indicated in FIGURE 2 of the drawings. When in this position, the grooves 45 and 46 of the pistons 37 and 39 no longer connect with the central port or groove 43 of the cylinder, so that the fluid cannot flow from the cylinder 49 through the return line 44. Furthermore, as soon as the pump 12 stops operation, the check valve 33 closes to prevent the return flow of fluid through this portion of the system. As a result, the piston 50 is held in the position illustrated.

When it is desired to move the piston 50 to the left as viewed in FIGURES 1 and 2, the rotation of the pump 12 is reversed, and fluid is drawn from the reservoir through the conduit 25 past the check valve 26. The discharge of the pump is forced through the conduits 15, 16, and 17 to the chamber at the end 19 of the cylinder 11, forcing the piston 37 to the right against the piston 39. Fluid from the conduit 15 may also flow through the conduit 22 past the check valve 23 to the port 24 which is connected by the conduit 47 to the right end of the cylinder 49. The piston 50 then moves to the left, the fluid to the left of the piston flowing through the connection 51, the port 34, and the piston groove 45 which is by this time in communication with the central groove or port 43 leading to the return line 44. Thus the movement of the piston 50 may be accurately controlled, and the piston may be locked in any desired position.

In FIGURES 3 and 4 of the drawings, I disclose a modified form of hydraulic system which is similar in many respects to the construction shown in FIGURES 1 and 2, but in which the piston in the work cylinder is not locked in position when the hydraulic is turned off. This system includes a reservoir 60, a valve cylinder 61 and a reversible hydraulic pump 62. When the pump is operating in the direction shown by the arrows in FIGURE 3 of the drawings, hydraulic fluid is drawn through the conduit 63 past the check valve 64 to the pump intake. The discharge of the pump 12, when operating in the direction illustrated, is connected to a conduit 65 leading to a chamber in the end 66 of the valve cylinder 61. In order that the system be reversible, the conduit 65 also communicates through the conduit 67 leading to the reservoir 60. The conduit 67 includes a check valve 69 which is closed when the conduit 67 is subjected to discharge pressure of the pump.

The conduit 65 is also connected to the reservoir 60 through a bypass 70 including a pressure relief valve 71. When the pressure in the system exceeds a predetermined maximum, the relief valve 71 will open to bypass the fluid back to the reservoir.

The conduit 63 is connected by an extension 72 to a chamber at the end 73 of the valve cylinder 61. The connection 72 is also connected to the reservoir 60 by a bypass line 74 including a pressure relief valve 75 capable of opening to bypass fluid in the event the pressure in the system exceeds a predetermined maximum.

The inner wall of the cylinder 61 is provided with a central groove or port 76 connected to a return line 77 also leading to the reservoir. The cylinder 61 also includes a pair of grooves 79 and 80 connected to ports 81 and 82 respectively. The ports 81 and 82 are connected by conduits 83 and 84, respectively to opposite ends of a work cylinder 85. A piston 86 is reciprocable within the cylinder 85.

The valve cylinder 61 includes a pair of valve pistons 87 and 89 having opposed axial sockets 90 and 91. The sockets support a spring 92 which normally urges the pistons 87 and 89 toward the ends 66 and 73 of the valve cylinder 61, as indicated in FIGURE 4 of the drawings. FIGURE 4 shows the normal position of the system when the pump 62 is not in operation.

The pistons 87 and 89 are provided with central portions 93 and 94 of proper diameter to snugly fit the bore of the cylinder 61. The outer end portions 95 and 96 of these pistons 87 and 89 are relieved or are of smaller external diameter to provide a means of communication between the ends of the cylinders and the grooves 79 and 80 connected to the ports 81 and 82 when the pistons are in a predetermined relation in the cylinder. The inner ends 97 and 99 of the pistons 87 and 89 are also of reduced diameter so as to provide a means of communication between the grooves 79 and 80 and the central groove 76 when the pistons 87 and 89 are against the ends 66 and 73 of the cylinder 61. As a result, when the pistons 87 and 89 are in their spaced apart position illustrated in FIGURE 4 of the drawings, both ends of the work cylinder 85 can communicate through the conduits 83 and 84 to the return line 77.

The operation of the system illustrated in FIGURES 3 and 4 of the drawings is substantially as follows:

When the pump 62 is not in operation, the pistons 87 and 89 are in the position illustrated in FIGURE 4 of the drawings, and the piston 86 in the work cylinder 85 is free to move in either direction. However, when the pump 62 is operated in the direction indicated by the arrows in FIGURE 3 of the drawings, fluid is drawn from the reservoir 60 through the conduit 63, past the check valve 64, and enters the conduit 65 leading to the chamber 66 at the left hand end of the valve cylinder 61. This fluid pressure forces the piston 87 to the right until the large diameter portion 93 of this piston opens the groove 79 leading to the port 81, and fluid under pressure then flows through the conduit 83 to the left hand end of the work cylinder 85, forcing the piston 86 to the right as viewed in this figure. The reservoir bypass 67 is closed by the check valve 69, and the bypass 70 is closed by the pressure relief valve 71. If the pressure continues until excessive pressure builds up in the system, due to the movement of the piston 86 to the right hand end of the cylinder 85, this pressure relief valve 71 will open and permit the bypassing of fluid to the reservoir 60.

When the pump 62 is rotated in the opposite direction, fluid is drawn from the reservoir 60 past the check valve 69 in the conduit 67 to the intake of the pump 62. The discharge of the pump then flows through the conduit 72 to the end 73 of the cylinder 61, forcing the piston 89 to the left, and forming communication between the right hand end of the cylinder 61 and the groove 80 which is connected to the port 82, the port 82 being connected by the conduit 84 to the right hand end of the work cylinder 85. The piston 86 is then urged to the left as viewed in the figures until the pump is turned off or until the piston reaches the end of its stroke. At this time, the pressure relief valve 75 will open to permit the bypass of fluid from the pump discharge to the reservoir through the conduit 74.

It will be noted that when the pistons 87 and 89 are in the position illustrated in FIGURE 3 of the drawings, the groove 80 is in communication with the central groove 76 connected to the return line 77, so that fluid can flow from the portion of the work cylinder 85 to the right of the piston 86 to the reservoir. Similarly, when the two valve pistons 87 and 89 are in their other extreme position, the groove 79 is in communication with the central groove 76 and the return line 77, thus permitting the discharge of fluid from the left hand end of the work cylinder 85 to the reservoir 60.

While the diagrammatic views in FIGURES 1–4 show certain of the pistons against the cylinder end walls, obviously means is provided to prevent these parts from coming into face contact. The fluid connections may be through the cylinder end walls, or spacers such as 99 may hold the pistons slightly spaced from the cylinder end walls. Any other conventional system for this purpose may be employed.

In accordance with the patent statutes, I have described the principles of construction and operation of my improvement in Hydraulic Systems, and while I have

endeavored to set forth the best embodiment thereof, I desire to have it understood that changes may be made within the scope of the following claims without departing from the spirit of my invention.

I claim:

1. A hydraulic system including,
a reservoir,
a valve cylinder,
a pair of valve pistons each individually reciprocable between two extreme positions,
means operable to selectively direct fluid under pressure from said reservoir to either end of said valve cylinder,
a return connection from a point intermediate the ends of said valve cylinder to said reservoir,
a work cylinder,
a piston reciprocable in said work cylinder,
a connection between each end of said work cylinder and a corresponding port in the wall of said valve cylinder between the ends and the center thereof and opened and closed by reciprocation of said valve pistons,
means providing communication between said means to selectively direct fluid under pressure and one said port in one extreme position of both of said pistons when said valve pistons are in end abutting relation to direct fluid under pressure to one end of said work cylinder,
means providing communication between the other of said ports and said return line in said one extreme position to permit return of fluid to said reservoir,
means providing communication between said means to selectively direct fluid under pressure and the other said port in the other extreme position of both of said pistons when both said valve pistons are in end abutting relation to direct fluid under pressure to the other end of said work cylinder,
means providing communication between the other of said ports and said return line in said other extreme position to permit return of fluid to said reservoir, and
means normally urging said valve pistons apart and toward the ends of said valve cylinder.

2. A hydraulic system including,
a reservoir,
a valve cylinder,
a pair of valve pistons each individually slidable in said cylinder from a position adjoining an end of the cylinder to a position adjoining the other piston,
means normally urging said pistons apart and toward the cylinder ends,
fluid supply means operable to selectively direct fluid from said reservoir to either end of said cylinder,
a return connection from a point intermediate the ends of said valve cylinder to said reservoir,
a work cylinder,
a piston reciprocable in said work cylinder,
said valve cylinder having a pair of ports located on opposite sides of said return connection and spaced from the ends of said valve cylinder for control by movement of said valve pistons,
a connection from each said port to a corresponding end of said work cylinder,
means providing communication between said fluid supply means and one said port when one said one valve piston is adjacent its adjoining end of the valve cylinder and the other said valve piston is adjoining the said one valve piston,
means providing communication between the return connection and the other said port when said valve pistons are in the positions last mentioned,
means providing communication between said fluid supply means and said other port when said other valve piston is adjacent its adjoining end of the valve cylinder and said one valve piston is adjoining said other valve piston, and
means providing communication between said one port and said return when said valve pistons are in last mentioned positions.

3. The structure of claim 2 and in which said ports are sealed from communication with said return line when said valve pistons are in position adjacent to the ends of the valve cylinder.

4. The structure of claim 2 and in which said ports are in communication with said return line when said valve pistons are in position adjacent to the ends of the valve cylinder.

5. A hydraulic system including,
a reservoir,
a valve cylinder,
a pair of piston valves slidable in said cylinder and movable from a first position in which both pistons are adjacent the cylinder ends, to a second position in which said pistons are both positioned toward one end of said cylinder and a third position in which said pistons are both positioned toward the other cylinder end,
resilient means normally biasing said pistons toward said first position,
a reversible fluid supply means connected to said reservoir,
a first conduit connecting one side of said reversible fluid supply means and one end of said valve cylinder, and a second conduit connecting the other side of said reversible fluid supply means to the other end of said valve cylinder,
said valve cylinder including a pair of ports spaced between the ends of said valve cylinder and the center thereof and controlled by movement of said valve pistons,
a third conduit extending from said first conduit to the port nearest said other end of the valve cylinder,
a fourth conduit extending from the said second conduit to the port nearest said one end of the valve cylinder,
a work cylinder,
a piston reciprocable in said work cylinder,
fluid connections between each opposite end of said work cylinder and a corresponding one of said ports,
a return line communicating with said valve cylinder between said ports and extending to said reservoir, and
means on each valve piston providing communication between the port located outwardly of that valve piston and said return line only when that valve piston is spaced from the corresponding end of the valve cylinder, whereby
when said valve pistons are in said second position, fluid under pressure may flow through the port nearest said other end of said valve cylinder and fluid from the work cylinder may flow through the port nearest said one valve cylinder end to said return line, and
when said valve pistons are in said third position, fluid may flow through the port nearest said one end of said valve cylinder to said work cylinder and fluid may flow from said work cylinder through the port nearest the other valve cylinder end to said return line.

6. The structure of claim 5 and including check valves in said third and fourth conduits permitting the flow of fluid under pressure to said valve cylinder and preventing a reverse flow.

7. The structure of claim 5 and in which said resilient means returns said piston valves to said first position when fluid from said fluid supply is cut off.

8. The structure of claim 6 and in which said resilient means returns said piston valves to said first position when fluid from said fluid supply is cut off.

9. A hydraulic system including

a reservoir,

a valve cylinder

a pair of piston valves slidable in said cylinder and movable from a first position in which both pistons are adjacent the cylinder ends, to a second position in which said pistons are both positioned toward one end of said cylinder and a third position in which said pistons are both positioned toward the other cylinder end,

resilient means normally biasing said pistons toward said first position,

a reversible fluid supply means connected to said reservoir,

a first conduit connecting one side of said reversible fluid supply means and one end of said valve cylinder, and a second conduit connecting the other side of said reversible fluid supply means to the other end of said valve cylinder,

said valve cylinder including a pair of ports spaced between the ends of said valve cylinder and the center thereof and controlled by movement of said valve pistons,

means on each piston valve providing communication between an end of said valve cylinder and the nearest of said ports when said piston valves are in said second and said third positions, and closing communication when said piston valves are in said first position,

a fluid return line connecting the center portion of said valve cylinder to said reservoir,

means on each piston providing communication between one said port and said return line while said other said port is in communication with fluid pressure in an end of said cylinder while said pistons are in either said second or third position, providing communication between said return line and both said ports when said pistons are in said first position,

a work cylinder,

a piston reciprocable in said work cylinder, and

means connecting each end of said work cylinder to a corresponding said port.

References Cited in the file of this patent

UNITED STATES PATENTS

2,916,879	Gondek	Dec. 15, 1959
2,927,429	Carlson	Mar. 8, 1960
3,060,688	Gondek	Oct. 30, 1962