March 25, 1947. F. E. FINLAYSON 2,418,020

FLATIRON

Filed Nov. 14, 1944 2 Sheets-Sheet 1

Fig. 1.

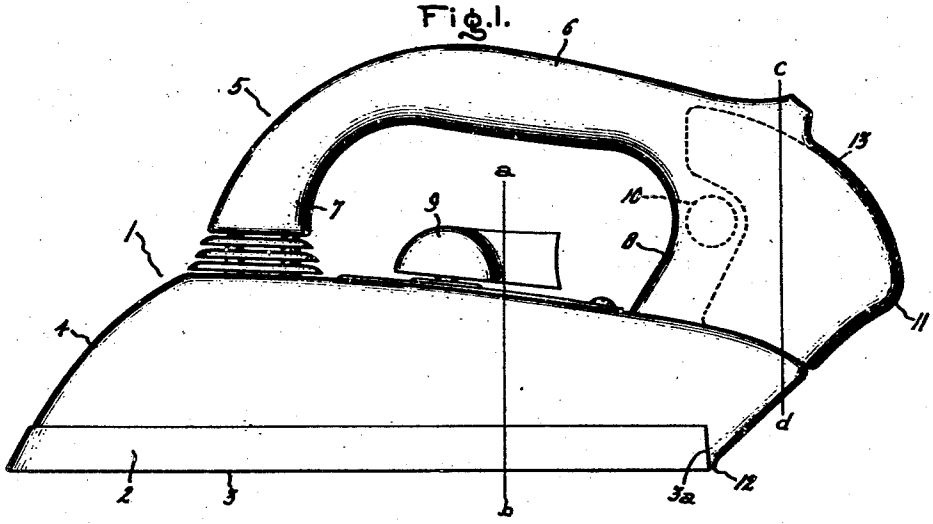

Fig. 2.

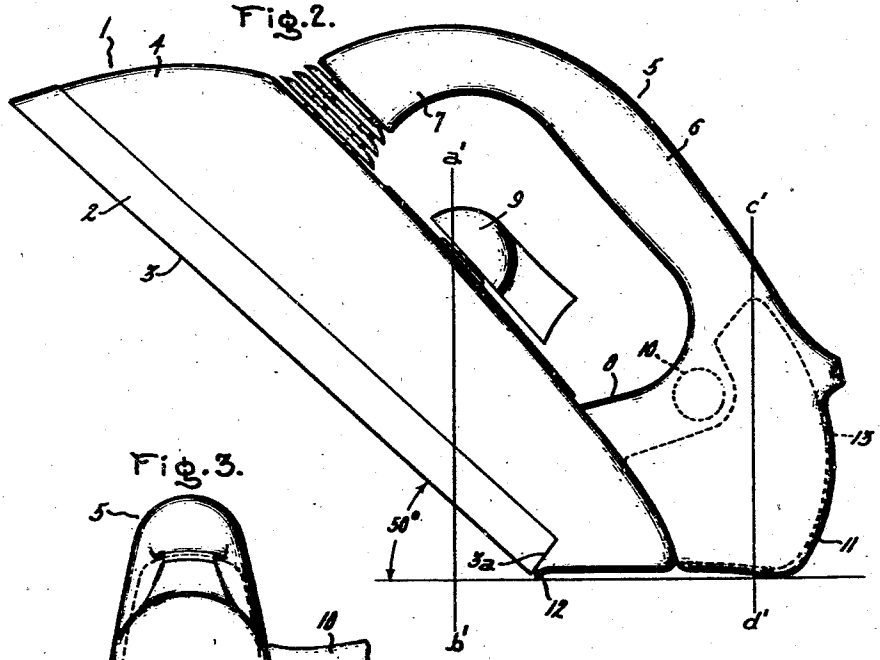

Fig. 3.

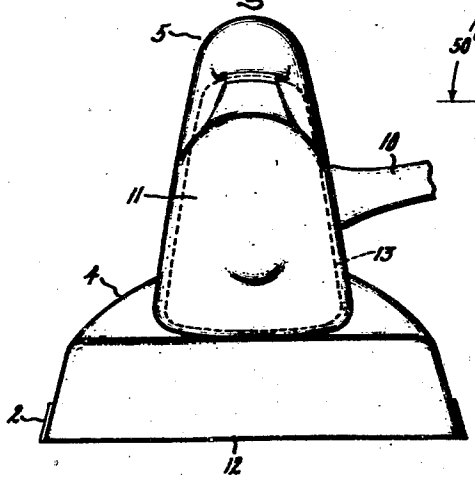

Inventor:
Frank E. Finlayson,
by Harry C. Dunham
His Attorney.

March 25, 1947. F. E. FINLAYSON 2,418,020

FLATIRON

Filed Nov. 14, 1944 2 Sheets-Sheet 2

Fig. 4.

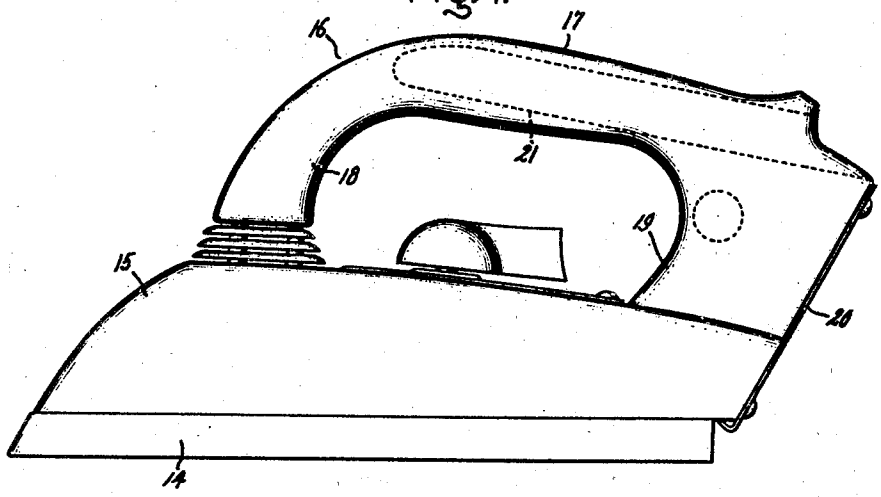

Fig. 5.

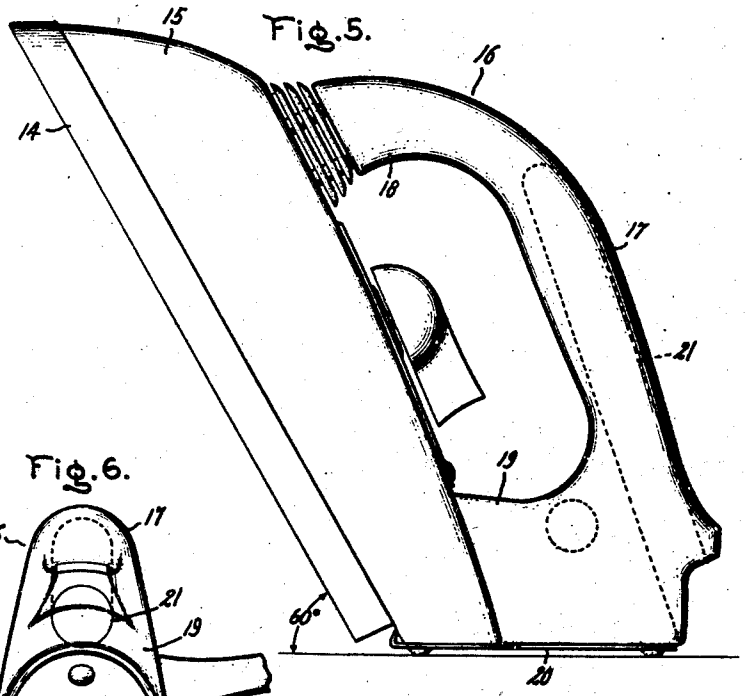

Fig. 6.

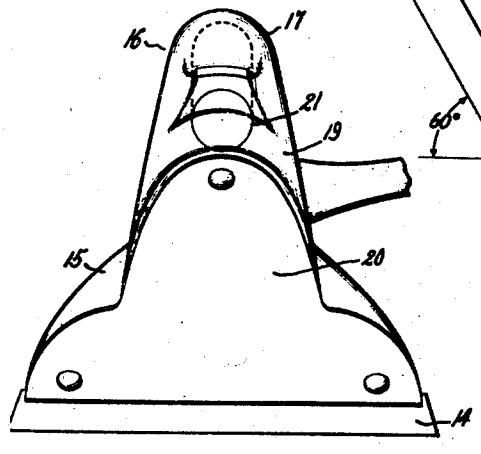

Inventor:
Frank E. Finlayson,
by Harry E. Dunham
His Attorney.

Patented Mar. 25, 1947 2,418,020

UNITED STATES PATENT OFFICE

2,418,020

FLATIRON

Frank E. Finlayson, Ontario, Calif., assignor to General Electric Company, a corporation of New York

Application November 14, 1944, Serial No. 563,337

2 Claims. (Cl. 38—79)

1

This invention relates to flatirons, and it has for its object the provision of an improved flatiron having means for assisting the operator in moving the iron to a non-ironing position of rest with the soleplate removed from the pressing surface, and for holding it in this position.

More specifically, it contemplates the provision of a flatiron having means forming a rest for holding the soleplate with its pressing surface making an angle less than 90° with the normal horizontal ironing position, rather than in the position of rest of the usual iron in common use wherein the pressing surface makes an angle greater than 90° with the horizontal, thereby materially lessening the work of tilting the iron upwardly; and it further contemplates the provision of means for assisting the operator in tilting the iron to this position of rest, and also for holding the iron therein.

In accordance with this invention the iron is provided with an auxiliary weight located so as to weigh the iron down when it is in its normal ironing position, but when the iron is tilted upwardly toward its rest position beyond a predetermined angle the weight operates to assist in the lifting of the iron, and also to hold it in its position of rest once it has been moved to this position.

For a more complete understanding of this invention, reference should be had to the accompanying drawings in which Fig. 1 is a side elevation of a flatiron embodying one form of this invention, the iron being shown in its horizontal ironing position; Fig. 2 is a figure similar to Fig. 1 but illustrating the iron in its position of rest; Fig. 3 is a rear elevation view of the iron shown in Figs. 1 and 2; Fig. 4 is a side elevation of a flatiron embodying another form of this invention; Fig. 5 is a view similar to Fig. 4 but illustrating the iron of Fig. 4 in its up-ended position of rest; and Fig. 6 is a rear elevation view of the iron shown in Figs. 4 and 5.

Referring more particularly to Figs. 1–3 inclusive, this invention has been shown as applied to a flatiron having a body 1 which comprises a soleplate 2 having a lower pressing surface 3; it will be understood that the soleplate, as usual, will be pointed at the front end and will have a substantially straight edge at the rear or heel end 3a. Also it is preferable that the soleplate be thin and relatively light in weight. The body 1 further comprises the usual enclosing shell or housing 4 upon which is mounted a handle 5, the handle having a hand-grasping section 6

2

and front and rear upright supporting standards 7 and 8.

While this invention is applicable to irons in general, it has been illustrated as applied to an electrically heated iron of the automatic type, a suitable temperature control knob 9 being provided to adjust the temperature of the soleplate 2. Also, entering the rear handle standard 8 is an electrical supply cord 10.

The iron body 1, in accordance with this invention, is provided at the rear with means for holding the iron in an up-ended position of rest as shown in Fig. 2. This means comprises an enlargement 11 projecting from the rear handle standard 8 and a protuberance 12 of the housing 4 adjacent the heel end of the soleplate 2, the enlargement 11 and protuberance 12 lying in a common plane. It is contemplated that the rest means will support the iron in the fashion shown in Fig. 2 wherein the pressing surface 3 makes an angle with the horizontal, that is with the normal ironing position of Fig. 1, materially less than 90°. In the specific example of the invention illustrated in Figs. 1–3 this angle is in the neighborhood of 50°, that is, the common plane containing the enlargement 11 and the protuberance 12 makes an angle of about 130° with the pressing surface 3 of the iron. It will be understood, however, that the angle may vary widely but it is preferable that it be not too great.

In addition to the rest means, this invention comprises means for normally weighing the iron down, but when the handle 6 is grasped and the forward end of the iron elevated toward the upright position of Fig. 2, the weighing means will assist in lifting the iron to this position, and also will hold it in this position. This means comprises an auxiliary fixed weight 13 located in the rear extension of the handle standard 8, as clearly shown. The weight may be of any suitable material such as lead and preferably it will be inserted up into a hollow chamber formed in the rear handle standard 8.

The weight 13 is so proportioned and it is so positioned in the handle that when the iron is in its normal ironing position shown in Fig. 1 the weight presses the iron downwardly. However, when the iron is tilted upwardly on the rear heel edge 3a as a fulcrum beyond a predetermined angle the weight will then become effective to assist the operator in lifting the iron to its position of Fig. 2 and when it is in this position will hold it there.

Thus in Fig. 1, the center of gravity of the

iron without the weight passes through the line *a*--*b*, whereas the center of gravity of the weight passes through the line *c*—*d*. Thus, the center of gravity of the weight with relation to the fulcrum about which the iron pivots is such that the weight cannot tilt the iron, but on the contrary weighs the iron downwardly; that is, the vertical moment of the weight about the axis **3***a* is less than the vertical moment of the iron body about this axis. When the iron is in its position of rest of Fig. 2, the iron center of gravity passes through the line *a'*—*b'*, whereas that through the weight passes through the line *c'*—*d'*, and the vertical moment of the weight about the axis **3***a* is greater than the vertical moment of the iron body about this axis. At some point in between these two positions, the vertical moment of the weight **13** will just balance that of the iron, and as the iron is tilted upwardly beyond this point its vertical moment becomes greater than that of the iron, and therefore, it will assist the operator in tipping the iron upwardly and also will hold it in the position of rest.

In the embodiment of Figs. 4–6 inclusive, the iron is provided with a soleplate **14**, a shell **15**, a handle **16** having a hand-grasping portion **17** and front and rear standards **18** and **19**. At the rear, the handle is provided with an inclined surface **20** forming a rest for holding the iron in the up-ended rest position as shown in Fig. 5. Here the auxiliary weight **21** instead of being concentrated in the rear handle standard as in the first form of the invention extends longitudinally through the hand-grasping portion **17** of the handle. However, it functions in exactly the same way in that when the iron is in its pressing position of Fig. 4 it weighs the iron down and when the iron is fulcrumed about the rear heel edge of the soleplate beyond a predetermined angle, the weight will assist in the tilting of the iron to its position of rest of Fig. 5 and when it is in this position it will hold it there. Here, the surface **20** supports the soleplate at an angle of about 60° with the horizontal, and therefore, it makes an angle of about 120° with the soleplate pressing surface.

While I have shown and described particular embodiments of my invention, it will be obvious to those skilled in the art that various changes and modifications may be made without departing from my invention in its broader aspects and I therefore aim in the appended claims to cover all such changes and modifications as fall within the true spirit and scope of my invention.

What I claim as new and desire to secure by Letters Patent of the United States is:

1. A flatiron comprising an iron body provided with a soleplate having a front end and a rear end and also a pressing surface on its bottom, means lying in a common plane defining a rest for said body, said plane making an angle with said pressing surface materially greater than 90°, said support means thereby being arranged to function to support the body in a rest position with said front end elevated and said pressing surface making an angle materially less than 90° to the normal horizontal ironing position, the front end of said iron body being tiltable upwardly to said rest position about a transverse axis located adjacent said rear end of said soleplate, and an auxiliary weight fixedly secured to said iron body and having a weight distribution with relation to it so that when said iron body is in said normal horizontal ironing position the vertical moment of said weight about said axis is less than the vertical moment of said body about said axis, but when said front end is tilted upwardly about said axis toward said rest position to a predetermined angle, which is less than said angle that is materially less than 90°, the center of gravity of said body and weight shift with reference to said axis so that the vertical moment of said weight is located to the rear of said axis and is greater than the vertical moment of said body with relation to said axis, whereby said weight assists in moving the body to said rest position and when said body reaches said position holds it therein.

2. A flatiron comprising an iron body provided with a soleplate that has a front end and a rear end and a pressing surface on its bottom, a handle, means fixedly securing said handle to said soleplate, said body also having at its rear a transverse pivotal edge on which said body is tilted upwardly to a rest position to elevate said pressing surface from its normal horizontal ironing position, support means lying in a common plane making an angle of around 120° to 130° with said pressing surface and defining a rest for holding said body in said rest position with said pressing surface at an angle of around 50° to 60° to said ironing position, said handle having a chamber therein and a weight fixed in said chamber, said weight positioned and distributed with reference to said iron so that when said iron is in said ironing position the vertical moment of said weight about said pivotal edge is less than the vertical moment of said body about said pivotal edge, but when said iron is tilted about said edge toward said rest position through a predetermined angle less than said angle of 50° to 60° the center of gravity of said body and weight shift with reference to said pivotal edge so that the vertical moment of said weight is to the rear of said pivotal edge and is greater than the vertical moment of said iron body with relation to said edge and thereby assists in tilting the iron body upwardly, and further when said body has been moved to said rest position operates to hold it therein.

FRANK E. FINLAYSON.

REFERENCES CITED

The following references are of record in the file of this patent:

UNITED STATES PATENTS

Number	Name	Date
1,965,746	Matveyeff	July 10, 1934
2,362,590	Smith	Nov. 14, 1944
1,247,907	Tully	Nov. 27, 1917
1,728,269	Graetzer	Sept. 17, 1929
1,533,229	Colby	Apr. 14, 1925
1.964.923	Matveyeff	July 3, 1934