US00D782012S

(12) **United States Design Patent**
Eads

(10) **Patent No.: US D782,012 S**
(45) **Date of Patent: ** Mar. 21, 2017**

(54) **VALVE TRIM**

(71) Applicant: **DELTA FAUCET COMPANY**, Indianapolis, IN (US)

(72) Inventor: **Thad Eads**, North Manchester, IN (US)

(73) Assignee: **DELTA FAUCET COMPANY**, Indianapolis, IN (US)

(**) Term: **15 Years**

(21) Appl. No.: **29/551,217**

(22) Filed: **Jan. 12, 2016**

(51) **LOC (10) Cl.** **23-01**

(52) **U.S. Cl.**
USPC **D23/254**; D23/252

(58) **Field of Classification Search**
USPC D23/238–243, 249–254; D8/350–358
CPC E03C 1/04; E03C 1/0401; E03C 1/0402; E03C 1/0404; F16K 31/602; F16K 31/605; F16K 31/607
See application file for complete search history.

(56) **References Cited**

U.S. PATENT DOCUMENTS

D303,566 S * 9/1989 Kohler, Jr. D23/249
D413,655 S * 9/1999 Gottwald D23/254
D418,582 S * 1/2000 Gottwald D23/254
D511,805 S * 11/2005 Otero D23/249
D540,919 S * 4/2007 Soriano D23/249
D620,563 S * 7/2010 Hanna D23/254
D677,758 S * 3/2013 Mendoza D23/252
D740,396 S * 10/2015 Bahler D23/252
D760,359 S * 6/2016 Citterio D23/252

* cited by examiner

Primary Examiner — Robert Delehanty
(74) *Attorney, Agent, or Firm* — Edgar A. Zarins; Nirav D. Parikh

(57) **CLAIM**

The ornamental design for a valve trim, as shown and described.

DESCRIPTION

FIG. **1** is a perspective view of a valve trim showing my new design;
FIG. **2** is a top plan view thereof;
FIG. **3** is a front elevational view thereof;
FIG. **4** is a left side view thereof, the opposite side being a mirror image of the side shown;
FIG. **5** is a rear view thereof; and,
FIG. **6** is a bottom view thereof.
The broken line showing a handle is included for the purpose of illustrating environment that forms no part of the claimed design.

1 Claim, 2 Drawing Sheets

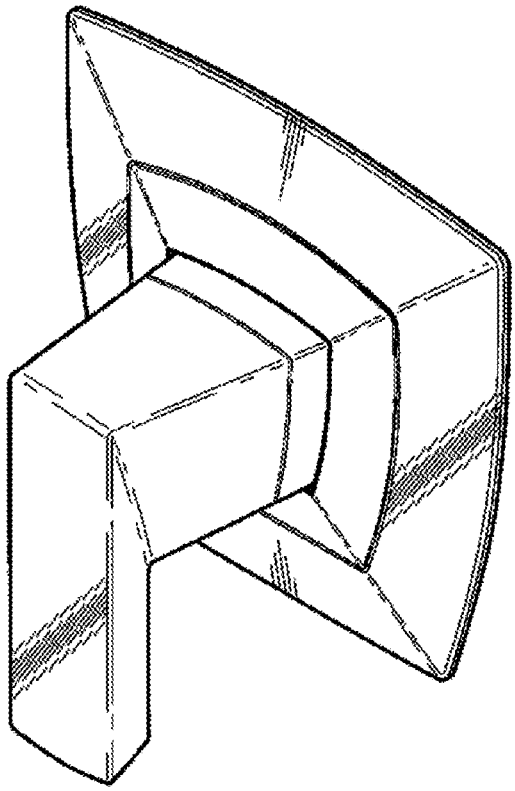

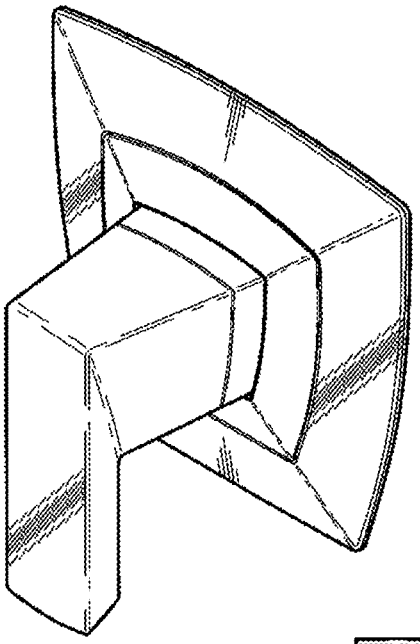

Fig-1

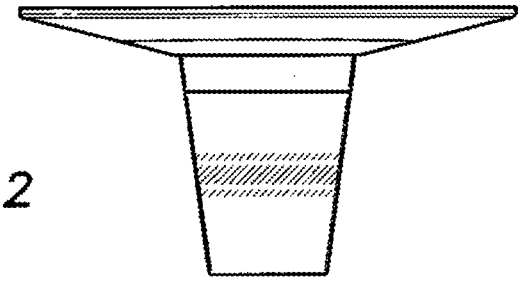

Fig-2

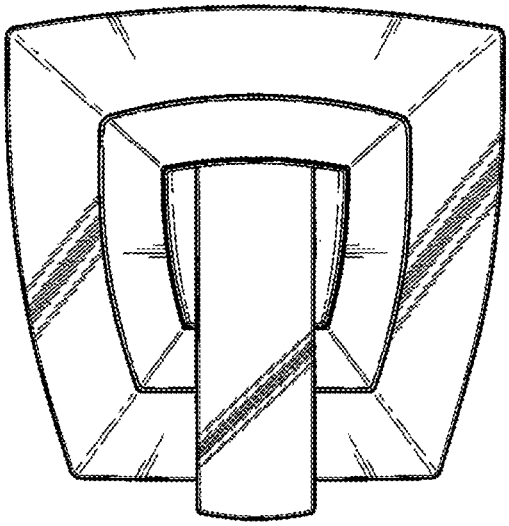

Fig-3

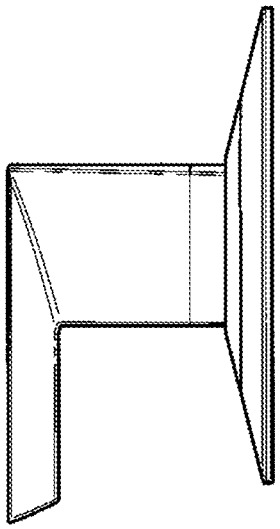

Fig-4

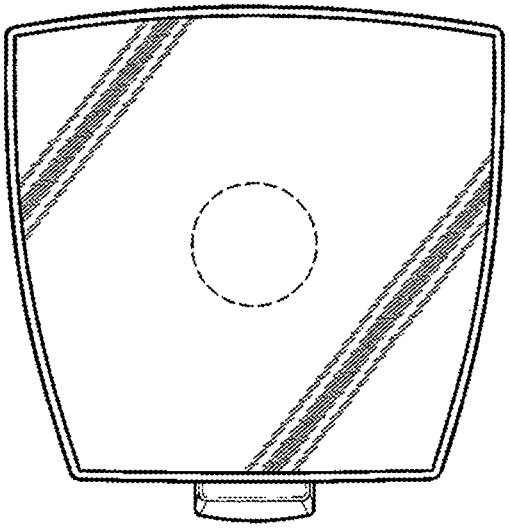

Fig-5

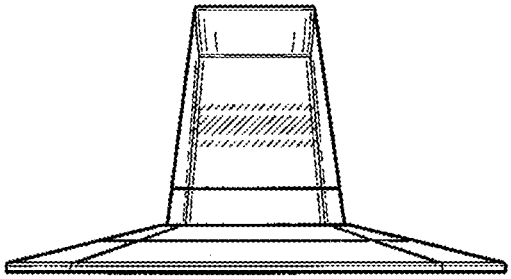

Fig-6