Jan. 5, 1943. K. J. BRAUN 2,307,617

STATISTICAL CARDS AND MEANS FOR AND METHOD OF PREPARING THEM

Filed April 29, 1941 2 Sheets-Sheet 1

FIG. 1

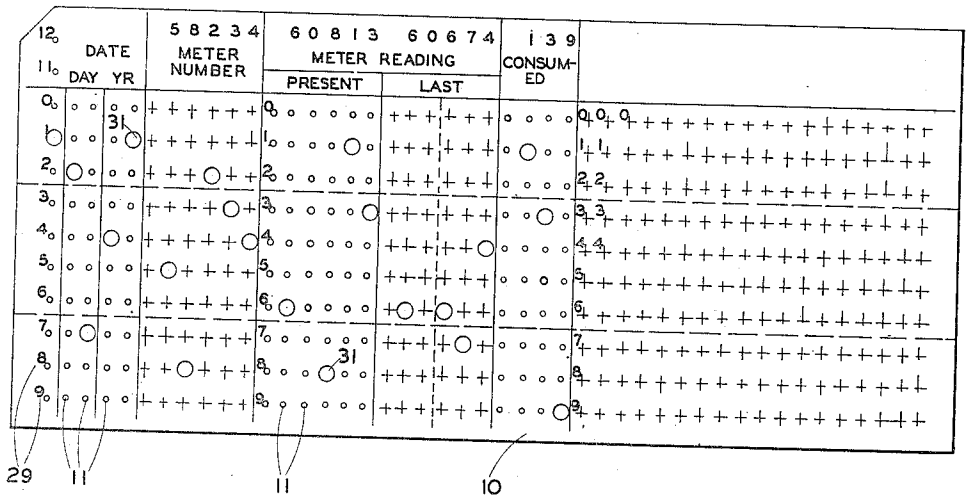

FIG. 2

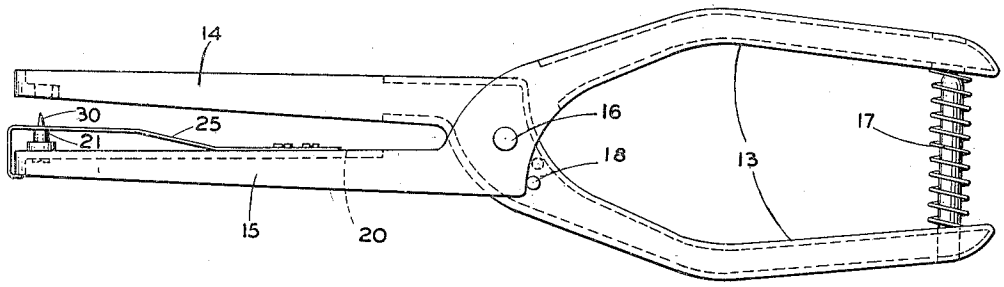

FIG. 3

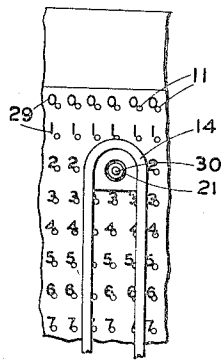

FIG. 4

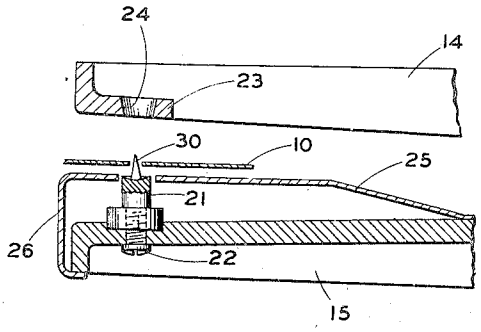

INVENTOR
KARL J. BRAUN

BY John L Sterling

ATTORNEY

Jan. 5, 1943. K. J. BRAUN 2,307,617

STATISTICAL CARDS AND MEANS FOR AND METHOD OF PREPARING THEM

Filed April 29, 1941 2 Sheets-Sheet 2

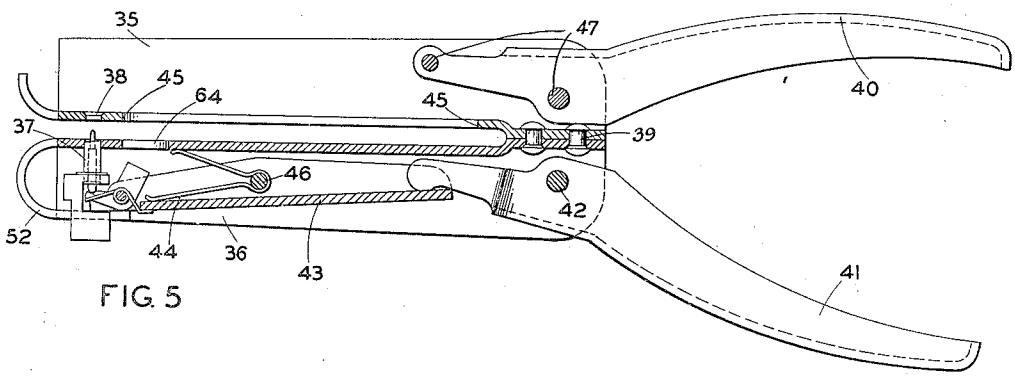

FIG. 5

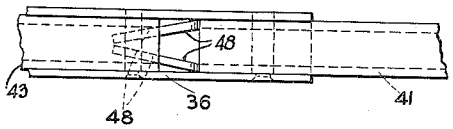

FIG. 6

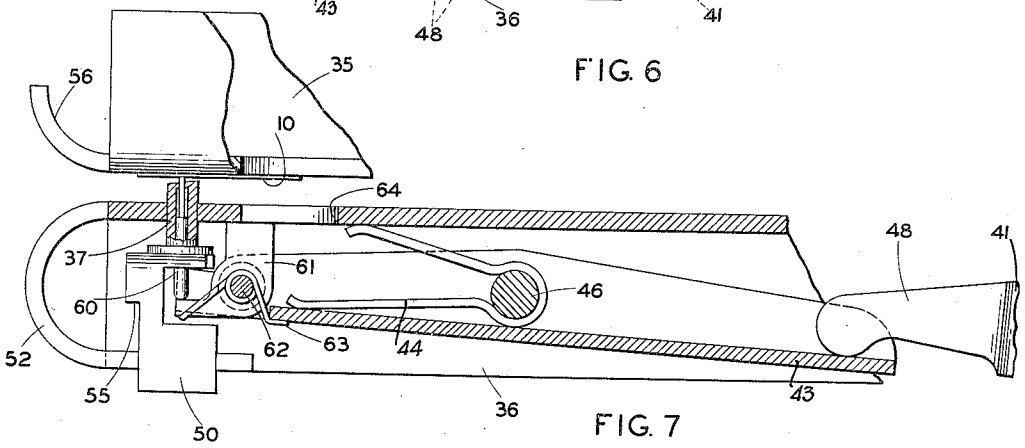

FIG. 7

FIG. 8

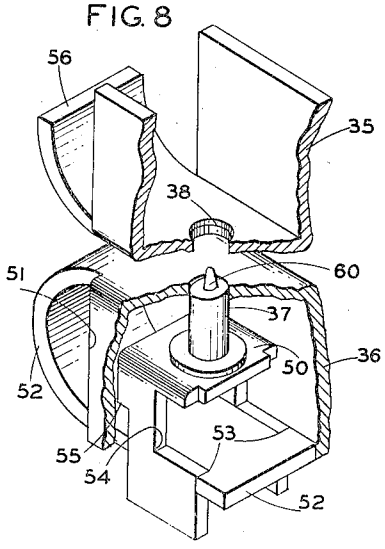

FIG. 9

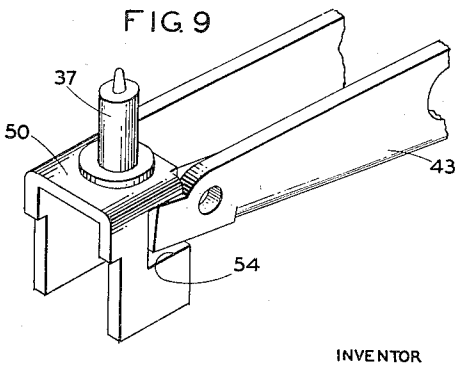

INVENTOR
KARL J. BRAUN

BY John L. Stealing

ATTORNEY

Patented Jan. 5, 1943

2,307,617

UNITED STATES PATENT OFFICE

2,307,617

STATISTICAL CARDS AND MEANS FOR AND METHOD OF PREPARING THEM

Karl J. Braun, North Merrick, Long Island, N. Y., assignor to Remington Rand Inc., Buffalo, N. Y., a corporation of Delaware

Application April 29, 1941, Serial No. 390,899

10 Claims. (Cl. 164—111)

This invention relates to the punching of the cards used to control statistical, accounting and like machines; and it includes improved apparatus for punching the index holes in the cards, an improved card, and an improved method of producing the punched cards.

In the well known card controlled accounting systems, such as the Powers and the Hollerith systems, the cards are of standard dimensions, and the holes are punched more or less exactly in certain index positions on the card. In the Powers card, there are 45 columns of index positions, 12 such positions in each column; and the holes are punched in selected ones of those positions. In order to control the machines, such as sorters and tabulators, it is essential that the holes be in the prescribed positions, and that they be located with a certain degree of accuracy. Heretofore, the punching has usually been done on machines, ranging from comparatively simple machines to quite elaborate ones, and the holes have been located with the required accuracy by mounting the card in a position in the machine determined by guiding and locating devices; and the punches are so located and guided as to punch the holes in their correct locations, which locations are determined by the construction of the machine. There are, however, situations where it is desirable to punch the holes by simpler and less expensive means; and especially, there are situations where it is desirable to punch the holes by a hand tool that can be carried about into places where it is not convenient to take a machine nor to use one.

For example, there is now in use a system of taking inventory according to which the accountant is provided with a set of Powers cards, each, in some instances, having a detachable coupon, and each card, when the coupon is detached, constituting a standard Powers card. These cards are printed with serial numbers and with suitably designated blanks which the accountant fills out in pencil as he moves about the store, warehouse or factory. There may be so many drill presses of a certain size and type designated by a number; so many cases of baked beans of a certain manufacture and size of can, etc., etc. He writes on each card the appropriate designations, quantities, etc. When the cards are turned in at the office, an operator places them one by one in a punching machine wherein the card to be punched is visible, and, by key operation, punches the index holes which, to the statistical machines, spell out the penciled data.

Gas and electric companies send out men to read the meters in the houses of their customers. These men write in a book the date, the meter number and the meter reading; and their notes when turned in at the office are transcribed by punching machine operators into index holes in the cards.

It is an object of the present invention to improve the method of preparing punched cards in many situations of which the above are examples, and to provide equipment and apparatus adapted to that end. One object is to provide a punch simpler and less expensive than those now in use, but capable of punching the holes with the required accuracy.

Another object is to provide a punch capable of accurate work but of extreme portability, so that the accountant or the meter reader above mentioned, for example, can conveniently carry it about the store or factory and into the houses, and can punch the data on the spot without first writing it down. The punched holes thus become the original entry of the data, saving the time and risk of error involved in the transcription of written data. It is another object of the invention to provide a manufactured card in which the exact index positions are predefined by the structure of the card in such a way as to make it practicable to punch the holes with celerity and accuracy by means of a simple hand tool.

To the above and other ends which will be perceived upon a reading of the specification, the invention consists in certain features of construction, and combinations and arrangements of parts, in certain equipment and a certain method, all of which will be fully set forth herein and particularly pointed out in the claims.

In the accompanying drawings,

Fig. 1 illustrates a statistical card made and punched according to the invention;

Fig. 2 is a side view of one form of hand punching tool;

Fig. 3 is a fragmentary top view of the tool shown in Fig. 2, and with a card in position to be punched;

Fig. 4 is a fragmentary enlarged view of the tool shown in Fig. 2, in longitudinal section;

Figs. 5–9 illustrate a preferred form of hand punching tool;

Fig. 5 is a side elevation, partly in section;

Fig. 6 is a fragmentary bottom view of Fig. 5;

Fig. 7 is an enlarged fragmentary view of a portion of Fig. 5, but with the punching tool in locked position;

Fig. 8 is a still further enlarged fragmentary

isometric view, broken away and showing the sliding punch unit and the die;

Fig. 9 is an isometric view of the punch unit and a fragment of its operating lever.

The equipment utilized in practicing the present invention consists essentially of a simple punching tool (which may be a simple portable hand tool of the sort illustrated in Figs. 2–4, but a preferred form of which is shown in Figs. 5–9), and a set of cards adapted to control automatic statistical and accounting machines and which may be of the sort shown in Fig. 1. The card 10 shown is the familiar one long standard in the Powers and Hollerith systems, and having a capacity of forty-five columns of index positions, twelve such positions to each column. It differs from the usual card only in that at its index positions it has been prepunched, in the course of its manufacture, with small holes 11. These holes may be punched in all of the 540 index positions on the card, if desired; but usually they will be made only in certain fields or areas of the card designed for hand punching, other fields being punched by means of the machines already in use. These holes 11 serve as guides or locating means for the said hand punching tool.

The punching tool may be, and preferably is, constructed more or less after the fashion of a pair of pliers. The one shown in Figs. 2–4 has handles 13 and upper and lower jaws 14 and 15, the two members pivotally connected at 16, and pressed open by any suitable spring 17 to an extent limited by a stop 18. The members of pliers and plier punches are sometimes made of sheet metal formed and drawn to suitable shapes, and the tool illustrated is made in that way. The lower jaw 15 thus consists of a sort of channel piece comprising vertical flanges or cheeks connected by a horizontal web 20. Near its end this web carries a punch 21, secured thereto by a screw 22. The web 23 of the upper jaw may have a die secured to it, but, as here shown, said web has a hole 24 to fit the punch 21 and itself serves as the die. The stripper 25 is shown as a flat spring secured by screws to the web 20 of the lower jaw and having a hole through which the punch 21 passes. This spring is formed down as shown at 26 to facilitate proper insertion of the card.

A finder 30 consisting of a pin adapted to enter the prepunched holes 11 in the card, projects upward from the end of the punch 21. The user of this equipment inserts the card between the jaws of the tool as shown in Fig. 4 and locates the punch approximately at the desired index position by eye in a manner which will be apparent by an inspection of Fig. 3. He then feels about until the finder pin 30 enters the hole 11 in that position. As the lower portion of this pin is of a size to fit said hole, the punch is thus located accurately at the index position, and the index holes 31 which control the machines may be punched by squeezing the handles 13 together. The user soon becomes expert at this operation and can punch the holes quite rapidly, the tool itself locating them with the required accuracy. Powers cards are usually printed with designating markings such as numerals 29, which enable the operator to identify the desired hole positions. In this instance the punch 21 is the usual cylindrical punch. The finder pin 30 is integral and concentric with the punch. It is tapered at its upper end, but at its lower part it is preferably cylindrical and of a diameter to fit the holes 11. The latter are materially smaller than the index holes 31; that is to say, they are small enough to prevent the passage of the sensing pins which set the automatic mechanism. According to usual practice, the holes 31 are one-eighth inch in diameter; and the guide holes 11 may be, for example, of about forty-thousandths inch.

In order to facilitate the visual positioning of the punch, the web 23 of the upper jaw of the tool may be only sufficient to serve as the punch die, the balance of it being cut away as illustrated in Figs. 3 and 4, so that the guide markings 29 on the card are visible between the two vertical cheeks of the jaw.

The spring 17 is shown as a helical compression spring surrounding a post secured at one end to one of the jaws of the tool and playing in a hole in the other.

The preferred form of the invention shown in Figs. 5–9, comprises a safety device to prevent the punch from operating unless the finder pin is inserted properly in a prepunched hole 11. The tool comprises upper and lower jaws 35 and 36, rigidly connected together, the punch 37 being slidingly mounted in the lower jaw 36 and entering a die hole 38 in the upper jaw. The upper handle 40 is rigid with the upper jaw 35, and the lower handle 41 is pivoted at 42 in the lower jaw 36 and operates the punch through a lever 43 which is returned to normal position by a spring 44.

The detail construction of this tool is immaterial. As shown the jaws are made of sheet metal, each formed into a channel shape, the inner webs of the channels being off-set and secured together by rivets 39, so as to leave between them a slot for the insertion of the card. The upper jaw preferably has its floor cut away as shown at 45 to enable the card to be seen through it, as in Fig. 3. The lever 43 is also formed channel-shaped and fits loosely between the flanges of the lower jaw, being pivoted between its ends on a pin 46. The handles 40 and 41 are, for convenience of manufacture, made alike of sheet metal formed and drawn into shape and of a thickness to fit between the flanges of the jaw members 35 and 36. The upper one 40 is secured to member 35 by two pins 47, making a rigid connection. The lower one 41 has its flanges prolonged into noses or fingers 48, bent toward each other so as to come between the flanges of the lever 43 (Fig. 6) and to rest on the web part of the lever (Fig. 7).

The punch 37 is rigidly secured, as by rivet or screw, to a supporting and guiding piece 50 consisting of a piece of sheet metal formed into an inverted U-shape of a width to fit loosely between the walls of the channel member 36. Said walls end at 51 but the floor of the channel projects beyond the ends of the walls making a sort of tongue 52 which is curved back on itself and extends a short distance into the trough of the channel as shown, making a little box in which the punch 37 and its support 50 are enclosed. The edges of the tongue 52 are notched at 53 (Fig. 8) forming between the notched tongue and the walls of member 36 two slots in which the arms of member 50 are guided for rectilinear sliding motion. A hole in the floor of the channel, through which the punch 37 passes, completes the guide for the punch unit. The prolonged ends of the walls of the channel-shaped lever 43, work in notches 54 in the arms of the member 50 and operatively connect the punch

unit with the lever. The spring 44 holds the parts in the positions shown in Fig. 5 with the punch withdrawn. Pulling up on the handle 41 rocks the lever 43 and forces the punch through the card.

It may be mentioned that the punch unit may be removed after first removing the pivot pin 46 and lever 43. Said unit will then drop down until the punch 37 is out of the hole in member 36 and shoulders 55 on the member 50 rest on the tongue 52. The bottom walls of the notches 54 are then below said tongue, and the whole unit can be slid rightward as viewed in the drawing. The narrow portions of the arms of member 50 are then in the slot 53 and the whole punch unit may then be tilted clockwise and removed.

The curve of the tongue 52 and a similarly curved tongue 56 of the upper jaw 35, serve as guides for the insertion of the card.

In order to prevent mis-punching, the finder pin 60 is made as a separate piece playing in an axial hole through the punch 37, its lower end projecting below the cross portion of the member 50 and resting on the horizontal arm of a locking piece 61. The feeler portion of the pin is of a reduced diameter to fit the prepunched holes 11, and the hole through the punch is counter-bored from below to fit the thicker portion of the pin. The shoulders on the pin and in the counterbore, limit the upward movement of the pin so that normally it projects upward to the desired extent to serve its purpose. The locking piece 61 is in the form of a bell-crank pivoted on a pin 62 extending through the walls of the lever 43, and it is urged to turn clockwise as viewed in the drawing by a light spring 63. This spring normally holds the piece 61 in the canted position shown in Fig. 5, holding the pin 60 in its uppermost position. But if the user squeezes the handles when a card 10 is in the tool and the pin 60 has not found a hole 11, the lever 43 will rock, and the punch will move upward a short distance, but the pin will be held back by the card and will rock the piece 61 as shown in Fig. 7. Said piece is so shaped that, if the lever 43 be rocked when said piece is in the canted position shown in Fig. 5, the upper arm of said piece will freely enter a cut-out 64 in the floor of the jaw member 36; but when the pin 60 is obstructed by the card, the upper arm of piece 61 swings in under said floor and locks the lever 43 against further rocking, just before the end of the punch reaches the card, as shown in Fig. 7. The operator is thus prevented from punching a sensing hole in the card except exactly in one of the index positions defined by the holes 11.

It will, of course, be understood that the detail construction of the means for locking the parts to prevent mis-punching, may be varied. The one shown is simple and convenient. It will also be understood that for some of the purposes of the invention the punch may not necessarily be incorporated in a portable pliers-like tool, but may be in any instrument where it is desired to punch the sensing holes in the card in predefined index positions selected by hand rather than by the accurate guiding and positioning means of the usual organized machines.

While I have described what I consider to be highly desirable embodiments of my invention, it is obvious that many changes in form could be made without departing from my invention, and I, therefore, do not limit myself to the exact form herein shown and described, nor to anything less than the whole of my invention as hereinbefore set forth, and as hereinafter claimed.

What I claim as new and desire to secure by Letters Patent is:

1. A device for punching statistical cards by hand comprising in combination, a die and punch, a finder pin yieldingly mounted, and a lock operated by said pin when said pin is arrested by the card to prevent effective operation of the punch.

2. In a card punching device, the combination with the punch and die, of a yieldingly mounted member arranged to come, in the operation of the device, into the plane of the card in advance of the punch, and means operated by said member when obstructed by the card to prevent the punch from entering the card.

3. A device for punching statistical cards by hand, comprising in combination, a die and punch, a finder pin adapted to enter a guide hole in a card and yieldingly mounted, and a lock operated by said pin when said pin is arrested by the card to prevent effective operation of said punch.

4. A device for punching statistical cards comprising in combination two jaws adapted to receive a card between them, a die in one jaw and a punch in the other, a finder pin slidably mounted in said punch and projecting beyond it toward the card, and a lock in said other jaw tiltable by said pin when the latter is arrested into position to lock said punch against effective operation.

5. A device for punching statistical cards comprising in combination two jaws rigidly connected together, a die in one of said jaws, a punch slidably mounted in the other jaw, means for operating said punch, a finder pin slidable in said punch, and a lock for said operating means actuated by said pin.

6. Equipment for making records which records consist of cards punched with index holes which control automatic machines, said equipment consisting of a punching tool having a punch and die and a guide pin projecting from the punch and of a size materially smaller than the punch; and a card having a record field prepunched with small holes adapted to receive and to guide said pin, so as to locate said punch correctly relative to the card.

7. A card adapted to be punched with index holes for use in card controlled machines and having in an index field thereof the index positions predefined by guide holes of a diameter materially less than that of the index holes to be punched in selected ones of such positions.

8. A card of the kind described having in an index field thereof index positions thereof punched according to a code with index holes adapted to control statistical machines and having the remaining index positions of said field prepunched with guide holes of a diameter materially less than that of said index holes.

9. The method of preparing a record card for use in statistical machines controlled by index holes in said card, which consists in punching small holes in those index positions of a record card included in the field or fields of said card designed for hand punching, locating the punch of a punching tool by eye approximately at the desired index position, guiding said punch accurately to said position by inserting into the selected small hole a finder pin suitably associated with said punch, and punching the index hole.

10. Equipment for making records which rec-

ords consist of cards punched with index holes which control automatic machines, said equipment consisting of a punching tool having two jaws adapted to receive a card between them, a punch with a projecting finder pin in one of said jaws and a die in the other jaw, one of said jaws being of channel formation with a sight opening in the web thereof through which the card is visible; and a card having a record field thereof prepunched with small holes adapted to receive and to guide said finder pin so as to locate said punch correctly relative to said card.

KARL J. BRAUN.