May 14, 1929. B. G. JONAS ET AL 1,712,886

VENDING APPARATUS

Filed Aug. 2, 1926 2 Sheets-Sheet 1

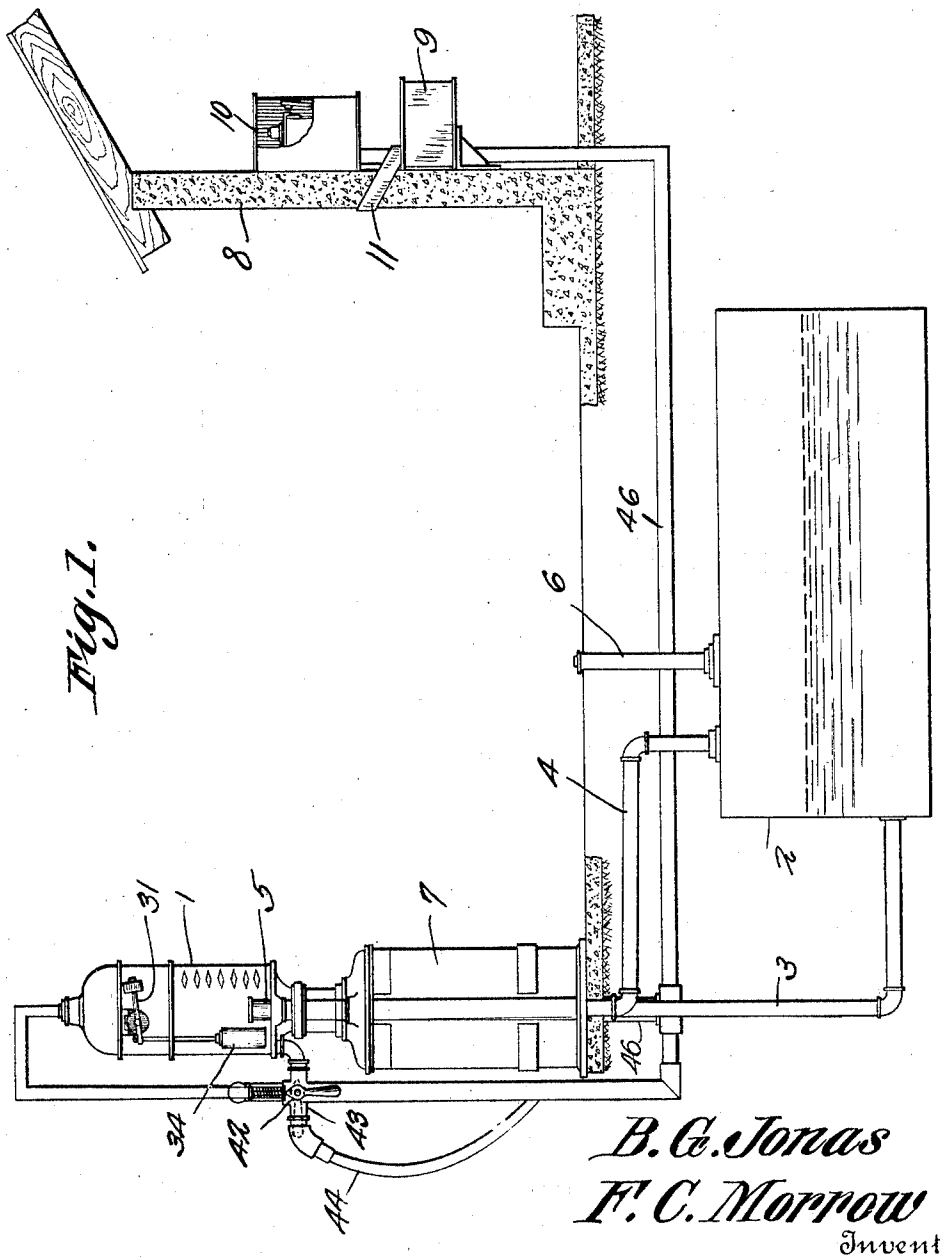

Fig. 1.

B. G. Jonas
F. C. Morrow
Inventor,

By Cashow & Co.
Attorneys.

May 14, 1929. B. G. JONAS ET AL 1,712,886

VENDING APPARATUS

Filed Aug. 2, 1926 2 Sheets-Sheet 2

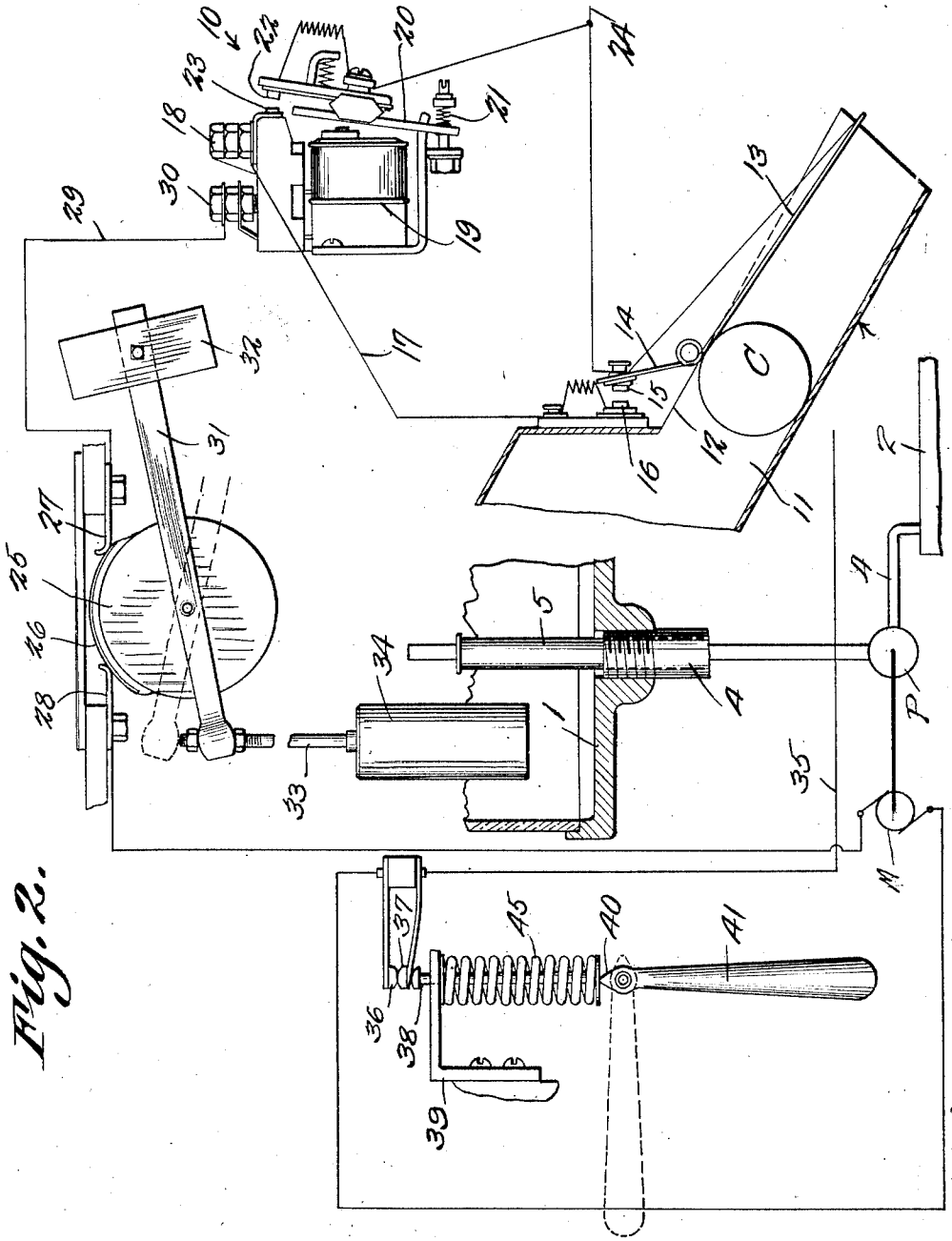

Fig. 2.

B. G. Jonas
F. C. Morrow Inventor
By Cashow & Co.
Attorneys.

Patented May 14, 1929. 1,712,886

UNITED STATES PATENT OFFICE.

BENJAMIN G. JONAS AND FRANK C. MORROW, OF WELLSTON, OHIO.

VENDING APPARATUS.

Application filed August 2, 1926. Serial No. 126,637.

This invention relates to apparatus designed primarily for vending gasoline although it can also be used for vending other liquids.

It is an object of the invention to provide an apparatus which can be set to deliver a predetermined volume of fluid when a coin or check of proper value is deposited in the apparatus.

A further object is to provide apparatus of this character utilizing a valve controlled switch so constructed and assembled with the remainder of the apparatus that, should an effort be made to withdraw from the apparatus more fluid than the purchaser is entitled to receive, the operation of the mechanism will be automatically stopped and the coin or check will be lost to the customer.

With the foregoing and other objects in view which will appear as the description proceeds, the invention resides in the combination and arrangement of parts and in the details of construction hereinafter described and claimed, it being understood that changes in the precise embodiment of the invention herein disclosed may be made within the scope of what is claimed, without departing from the spirit of the invention.

In the accompanying drawings, the preferred form of the invention has been shown.

In said drawings,

Figure 1 is an elevation of the complete apparatus.

Figure 2 is a view in diagram showing the several switches included in the apparatus and illustrating a portion of the tank and its overflow pipe, as well as the motor and pump.

Referring to the figures by characters of reference 1 designates a measuring container in communication with a tank 2 through a pipe 3. An overflow pipe 4 extends from the bottom of the container to the top of the tank 1 and has a longitudinally adjustable extension 5 adapted to be set so as to trap a predetermined volume of liquid in the container. This adjustment can be effected in any manner desired and any suitable means may be employed for locking the extension 5 against movement after it has been adjusted. The tank 2 has the usual filling pipe 6 opening thereinto from the street level.

The container 1 and the housing 7 associated therewith which holds the motor M and pump P for elevating liquid to the container, are arranged outside of an enclosure 8 so that a customer can have access to the container at all times. Within the enclosure 8 are located a coin or check controlled switch indicated generally at 9 and a magnetic switch indicated generally at 10. A chute 11 extends through the wall of the enclosure so as to direct a coin or check of the proper value into position to actuate the coin switch 9.

By referring particularly to Figure 2 it will be noted that the chute 11 has its inner end portion open at the top as shown at 12 and pivotally mounted in the open top of the chute is a strip 13 adapted to be engaged and elevated by a coin or check C of proper value inserted into the chute 11 and moving downwardly therethrough.

An arm 14 is extended from the pivot end of the strip 13 and carries a contact 15 normally spaced from another contact 16. This second contact is electrically connected, as shown at 17, to one terminal 18 of an electro-magnet 19. An armature 20 is pivotally mounted adjacent the magnet 19 and has a spring 21 for holding it normally spaced therefrom. This armature carries a contact 22 normally spaced from another contact 23 electrically connected to the terminal 18. Both the contact 15 and the contact 22 are electrically connected to one wire 24 extending from the service line.

Arranged within or adjacent to the container 1 is a gas proof float switch indicated generally at 25 and which includes a rotatable contact 26 normally establishing an electrical connection between two contacts 27 and 28 included in the electrical connection 29 between the terminal 30 of the electro-magnet 19 and the motor indicated generally at M. The rotary switch 26 has a lever 31 movable therewith and provided with a counterbalance 32 on one arm thereof. The other arm of this lever is connected by a rod 33 to a float 34 supported within the container 1. This float is so positioned relative to the lever that when the fluid within the container 1 reaches a predetermined level the float, which rises with the level of the fluid, will rotate switch contact 26 to the point where the electrical connection between the contacts 27 and 28 will be broken.

The second wire 35 leading from the motor 30 to the service line includes contacts 36 and 37 which are normally close together, these contacts being held in certain positions by a pin 38 slidably mounted in a guide 39

and supported by a cam 40. This cam is rotatable with the arm 42 of a valve located in the fluid outlet pipe 43 of the container 1, this pipe being provided with the usual flexible hose 44. A spring 45 is mounted on the pin 38 and serves to lower the pin when the cam 40 is moved out of normal position, thereby allowing the contact 37 to move away from the contact 36 and breaking the circuit to the motor.

Under normal conditions the parts are positioned as indicated by full lines in the drawings. The extension 5 of the overflow pipe is adjusted to any level necessary to insure vending of the quantity of gasoline or other liquid that is to be sold in exchange for the coin or check inserted in the apparatus. For example if the liquid is to be sold at 20¢ per gallon and a 50¢ coin is used as the basis of each sale the extension 5 is set so that two and one-half gallons of fluid will be retained in the container 1 before the overflow begins.

The customer inserts a 50¢ piece into the coin chute 11 and this coin while rolling downwardly within the chute, comes against the strip 13 and lifts it so that arm 14 will be moved to bring contact 15 against contact 16. This will place the electro-magnet 19 in communication with the service line inasmuch as the contacts 27 and 28 are electrically connected and the contacts 36 and 37 are also pressed together. Consequently magnet 19, being energized, will attract its armature 20 and bring contact 22 against contact 23. After the coin C passes out of the chute 11 the strip 13 will return to its normal position, thereby breaking the electrical connection at 15 and 16 but as the contacts 22 and 23 are together, the current through the electro-magnet will be maintained by way of these contacts with the result that the armature will be held to the magnet and current will flow from the wire 24 through the switch 25 to the motor and thence back to the line by way of wire 35. As soon as the motor begins to operate, the pump controlled thereby will elevate liquid to the container 1. The float 34 will be raised with the level of the liquid pumped into the container 1 and is so adjusted that when the level of this liquid reaches the top of the overflow extension 5 the switch contact 26, which has been moved by the rising of the float, will break the connection between the contact 27 and 28. Consequently the operation of the motor will be stopped and no further liquid will be pumped into the container. The customer then places the hose 44 to the inlet of the tank to be filled and swings the valve arm 41 so as to open the outlet valve 42. This action promptly breaks the electrical connection betwen the contacts 36 and 27. The spring actuated armature 20 is of course shifted automatically as soon as the circuit to the motor is broken by the float switch and, therefore, the connection between the contacts 22 and 23 is broken at the same time that the motor is stopped. When the valve 42 is opened the liquid trapped in the container will flow outwardly and the operation is thus completed.

It will be noted that an additional supply of liquid cannot be pumped into the container until the valve has been closed because this valve must be in closed position in order to insure a connection between the contacts 36 and 37. By providing the valve switch the purchaser is prevented from placing the coin in the slot and immediately drawing gasoline from the container 1, thereby getting a greater quantity than he is entitled to receive. Should such an attempt be made the opening of the valve will immediately break the circuit to the motor and the coin or check would be lost to the customer.

It is to be understood of course that the switches located adjacent to the gas container are to be gas proof and that all wiring leading thereto is likewise to be contained within a gas proof conduit as shown, for example, at 46, a portion of this conduit of course being extended to the motor and pump located in the housing 7. Suitable means for protecting the apparatus from the use of slugs, etc. can be provided as will be obvious.

What is claimed is:

1. The combination with a liquid container having an inlet and an outlet, and a valve for closing the outlet, of means including a motor for directing liquid into the container through the inlet, a float operated switch carried by the container and shiftable by liquid within the container for breaking the circuit to the motor when the liquid reaches a predetermined level in the container, said switch being normally closed, a normally open coin operated switch, a magnetic switch adapted to be energized and actuated by the closing of the coin controlled switch, thereby to close a circuit to the motor by way of the normally closed float controlled switch, said magnetic switch constituting means for maintaining the circuit closed following the opening of the coin controlled switch, means controlled by the outlet valve for breaking the circuit to the motor when the valve is opened, and means for opening the magnetic switch when the circuit to the motor is broken by the float controlled switch or the valve controlled switch.

2. The combination with a container having a valved outlet, and means including a motor for directing liquid into the container, of an electric circuit extending to the motor and including a normally open magnetic switch, a switch operated by the insertion of a coin for closing a circuit to the magnetic switch, thereby to actuate said switch to close the circuit to the motor and maintain the switch closed, means for breaking the circuit to the motor, means controlled by the break-

ing of the circuit for opening the magnetic switch automatically, said circuit breaking means including separate switches, means operated by the rise and fall of liquid in the container for opening and closing one of the switches respectively, and means operated by the opening of the valved outlet of the container for opening the other switch.

In testimony that we claim the foregoing as our own, we have hereto affixed our signatures.

BENJAMIN G. JONAS.
FRANK C. MORROW.