United States Patent [19]

Graham et al.

[11] **3,860,499**

[45] **Jan. 14, 1975**

[54] **ELECTROPLATING APPARATUS AND METHOD**

[75] Inventors: **Earl R. Graham,** Athens; **Joseph P. Lagermasini,** Towanda; **Kenneth H. Shaner,** Luthers Mills; **David H. Hopkins,** Camptown, all of Pa.

[73] Assignee: **GTE Sylvania Incorporated,** Stamford, Conn.

[22] Filed: **Apr. 19, 1973**

[21] Appl. No.: **352,681**

[52] **U.S. Cl.** ..... **204/15,** 204/224 R

[51] **Int. Cl.** **C23b 5/48,** B23p 1/02

[58] **Field of Search** ..... 204/224 R, 15

[56] **References Cited**

UNITED STATES PATENTS

3,723,283	3/1973	Johnson et al.	204/224 R
3,745,105	7/1973	Kosowsky et al.	204/224 R
3,746,630	7/1973	Kosowsky et al.	204/224 R

FOREIGN PATENTS OR APPLICATIONS

483,503	4/1938	Great Britain	204/224 R

Primary Examiner—T. M. Tufariello
Attorney, Agent, or Firm—Norman J. O'Malley; Donald R. Castle; Lawrence R. Fraley

[57] **ABSTRACT**

An apparatus and a method are disclosed for selectively electroplating a strip of material. The apparatus comprises a positioning means for receiving the strip, an open-top container adapted for holding a quantity of electrolyte solution therein, an engagement means for sequentially engaging the strip, an advancement means for moving the engaging means whereby a portion of the strip covers the open-top container, a seating means for engaging the upper surface of the strip to provide positive seating of the strip on the container, a retraction means for providing return movement of the engagement means when the strip is disengaged from the engagement means, at least one anode conductor for applying positive potential to the electrolyte solution within the container, and at least one cathode conductor for applying negative potential to the strip.

19 Claims, 10 Drawing Figures

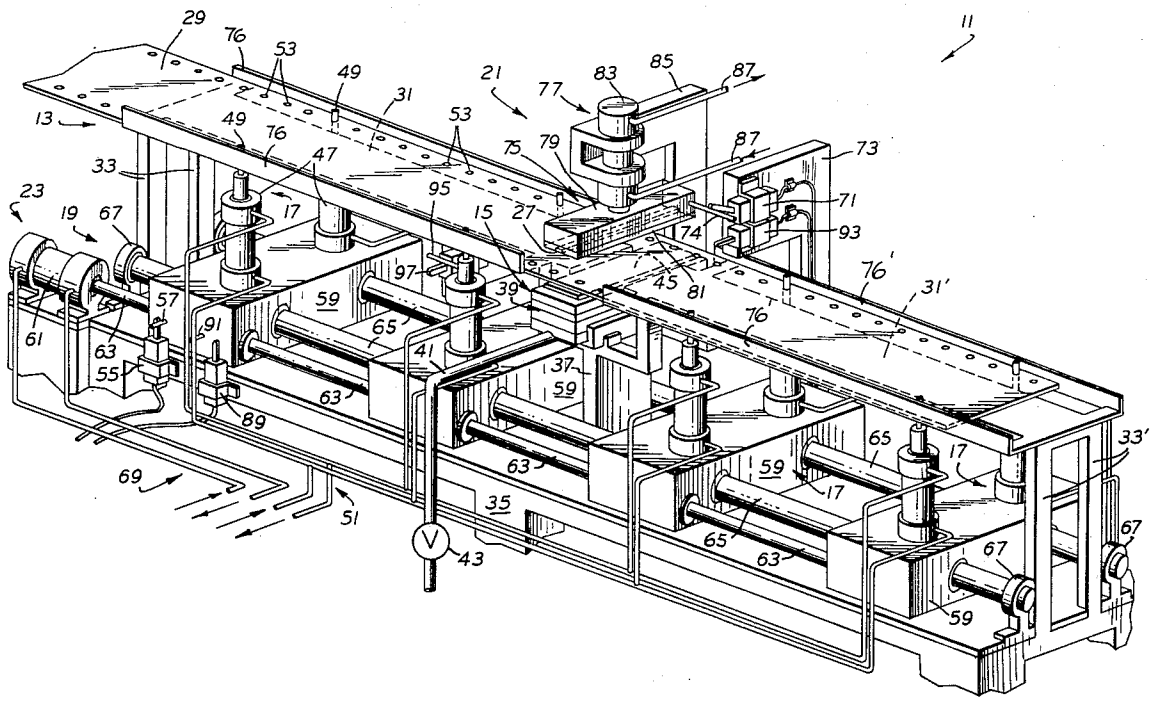

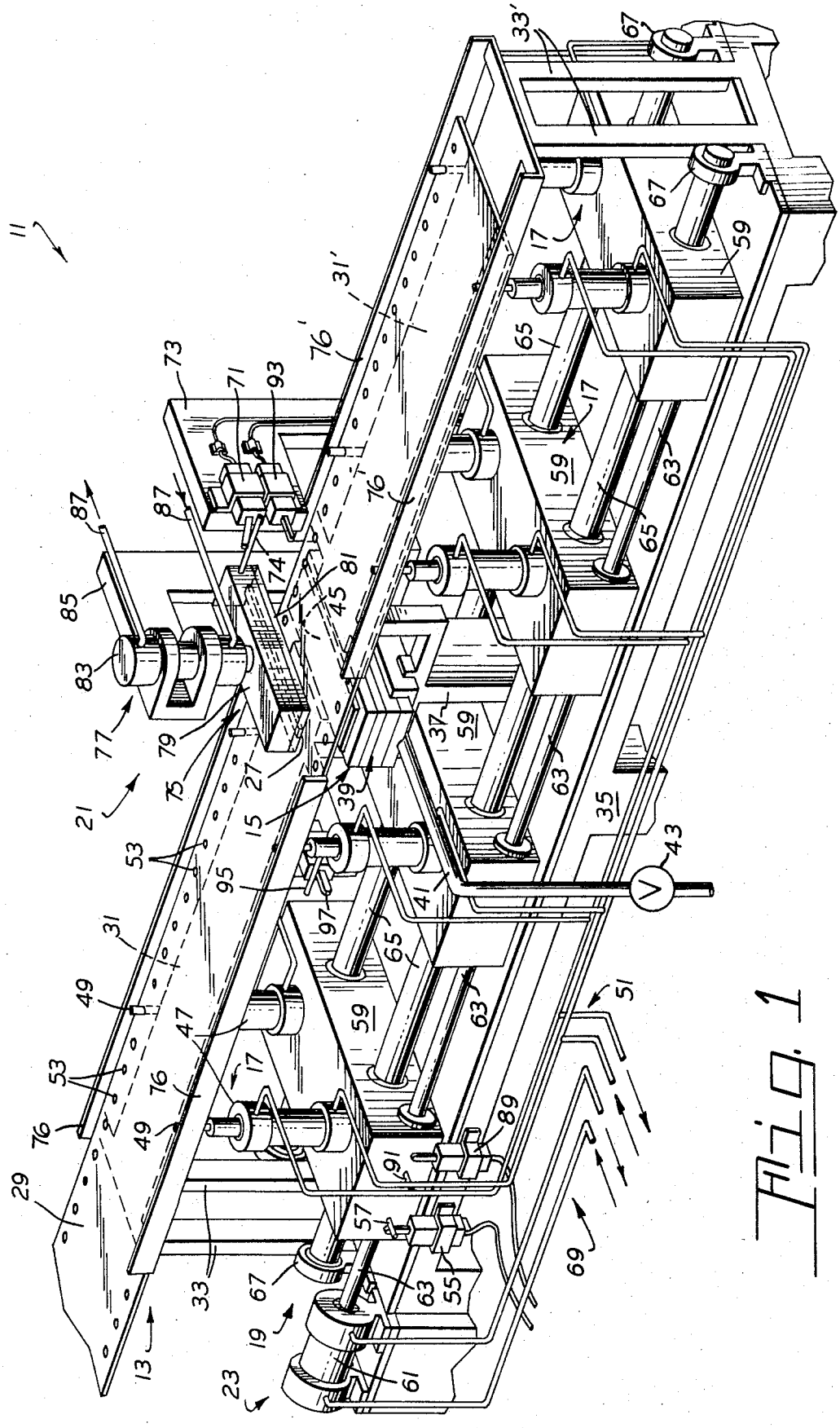
11
13
15
17
19
21
23
27
29
31
31'
33
33'
35
37
39
41
43
45
47
49
51
53
55
57
59
61
63
65
67
69
71
73
74
75
76
76'
77
79
81
83
85
87
89
91
93
95
97

FIG. 1

Fig. 2

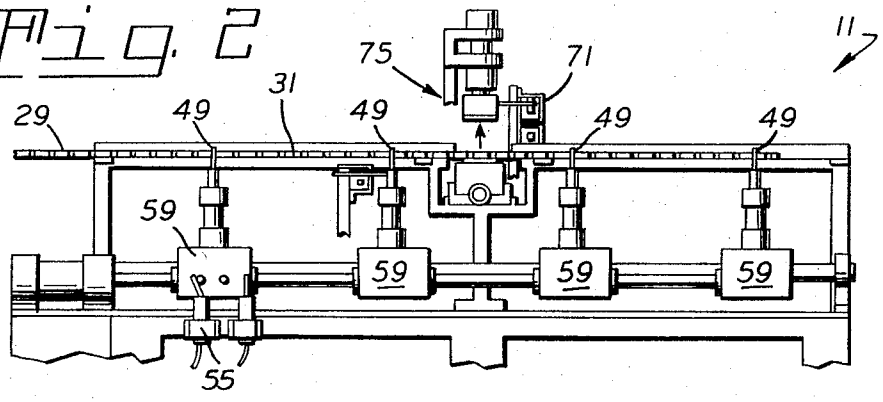

Fig. 3

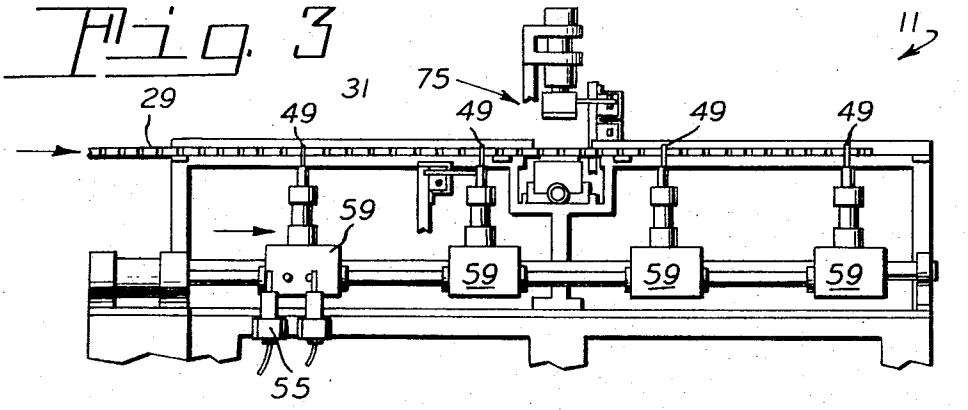

Fig. 4

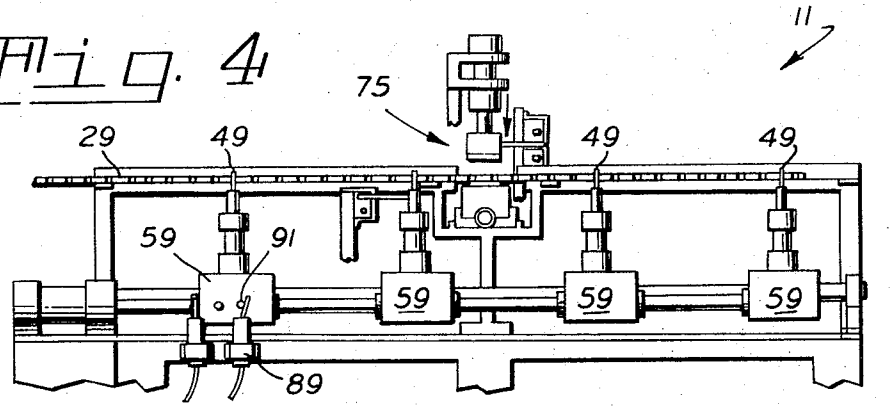

Fig. 5

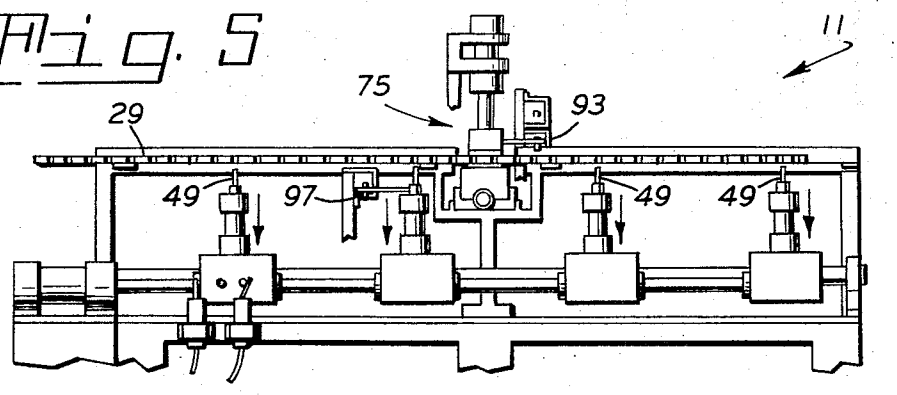

Fig. 6

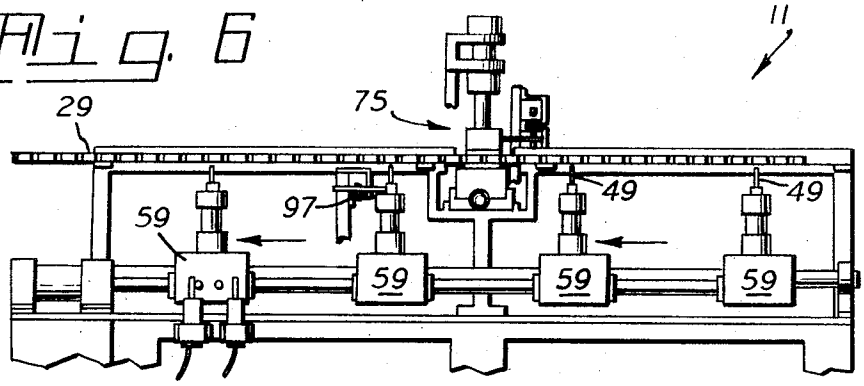

Fig. 7

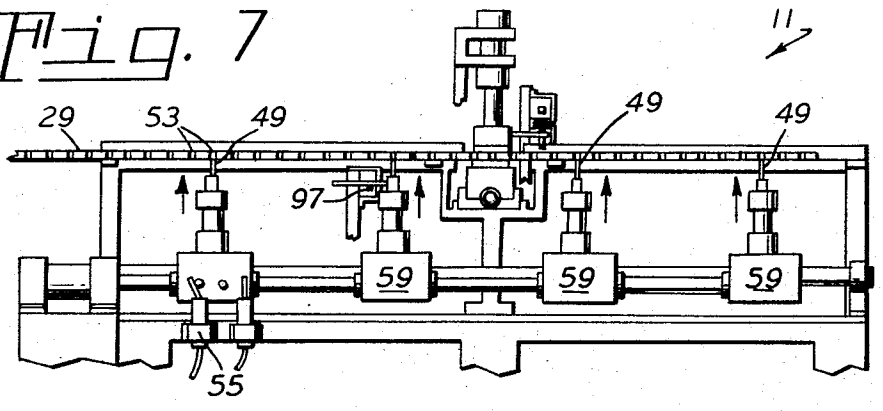

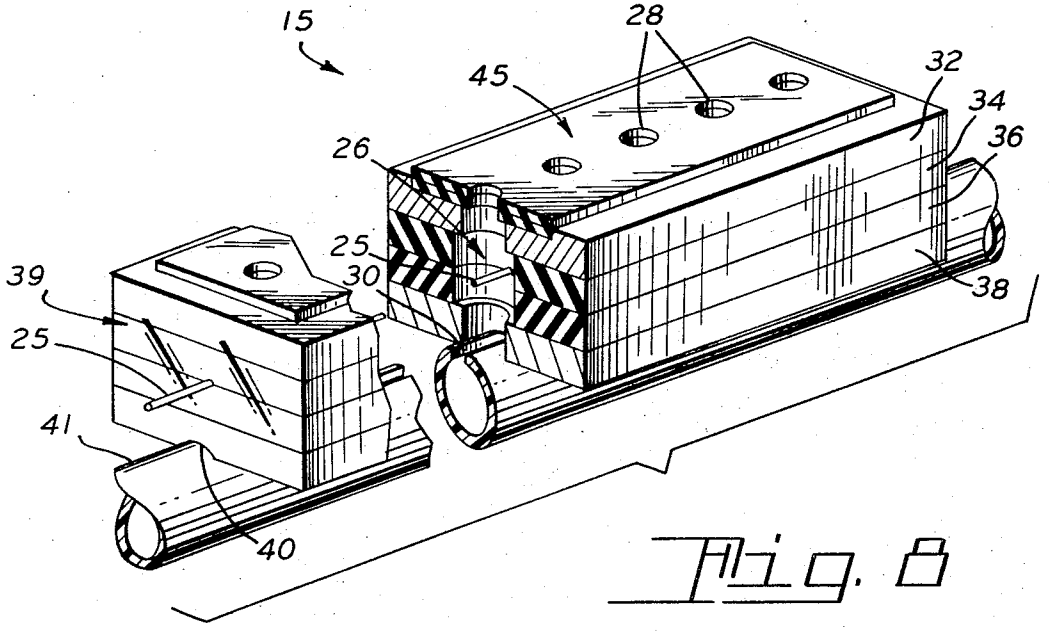

Fig. 8

Fig. 10

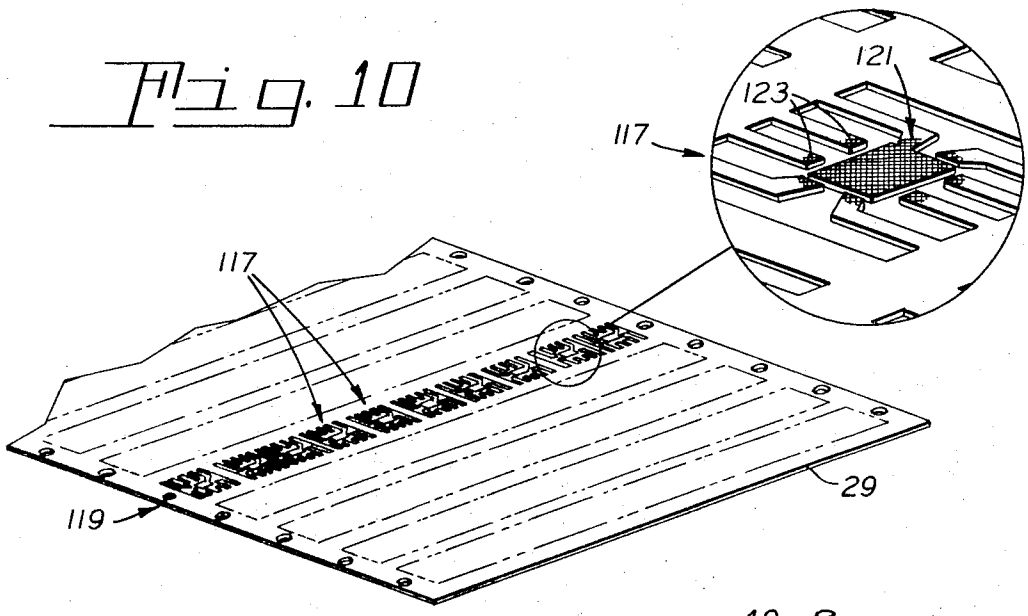
121
123
117
117
119
29

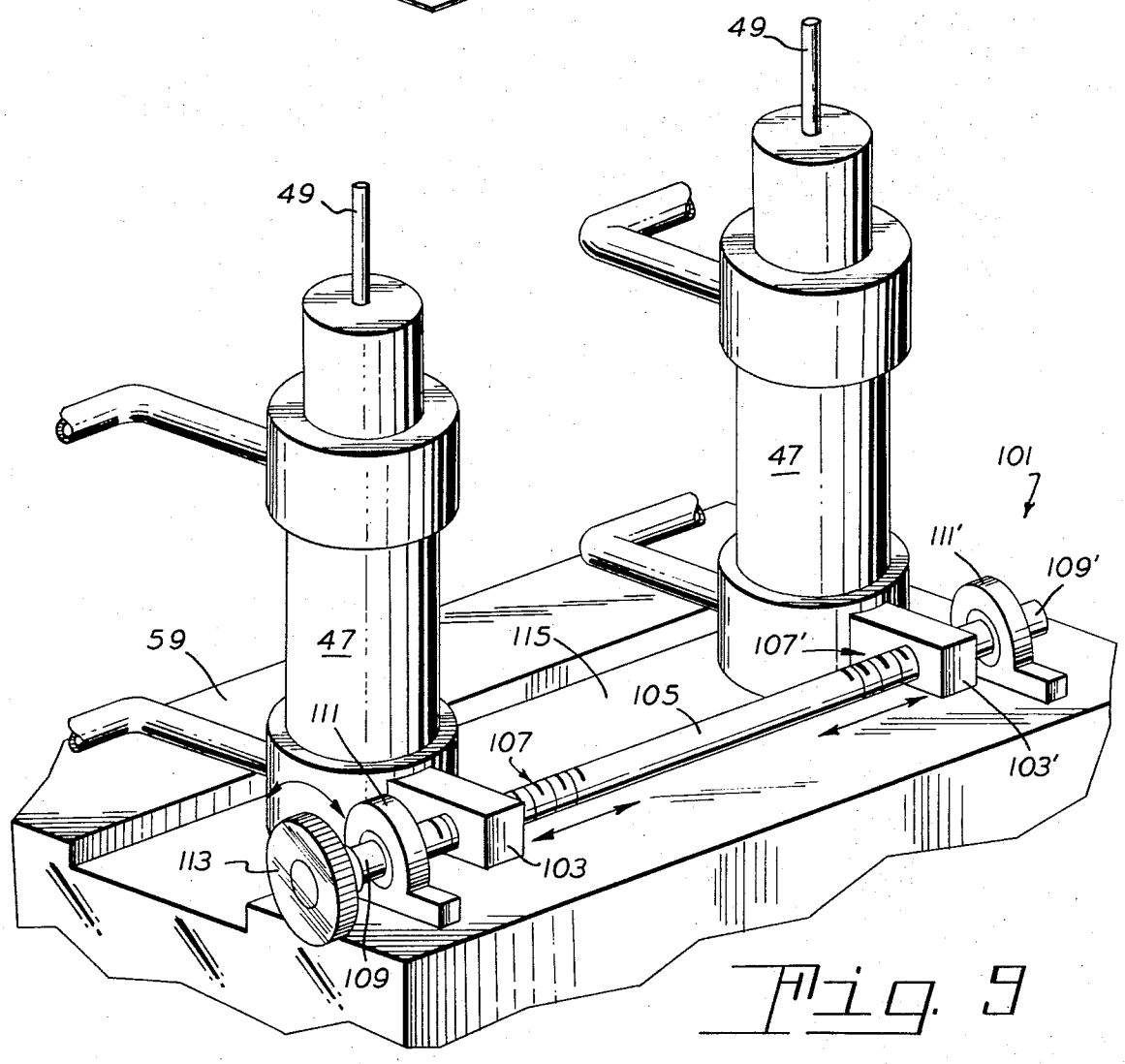
49
49
47
101
111'
109'
59
47
115
107'
105
111
107
103'
113
103
109

Fig. 9

ELECTROPLATING APPARATUS AND METHOD

BACKGROUND OF THE INVENTION

The invention relates to electrical deposition or plating of a metal or alloy of metals on areas of a strip of material to thereby provide desired characteristics such as improved electrical conductivity in these areas.

More particularly, this invention relates to an apparatus and method for achieving the electrical plating of a strip of material with precious metals thereby making it imperative that this plating be confined to desired areas on the material.

Previous methods for achieving localized electroplating have included dipping or submerging an article in a plating solution. These methods produce two unsatisfactory results. Firstly, the solution in the near vicinity of the article to be plated is soon spent and requires replenishing. Secondly, dip plating involves additional masking steps for each article to be plated in order to accomplish plating of a selected area on that article.

Another method utilized in plating of the variety described above is brush plating. When employing this method, however, a similar debilitation of the electrolyte soon occurs, resulting in a relatively slow rate of deposition of plating material in the article.

It is believed, therefore, that an apparatus and method which could successfully achieve the electrodeposition of metals on preselected areas of a strip of material while still overcoming the above cited disadvantages of the prior art would constitute an advancement in the art.

OBJECTS AND SUMMARY OF THE INVENTION

It is therefore an object of this invention to provide a method for electroplating selected areas on a strip of material.

It is a further object of this invention to provide an apparatus for achieving this plating.

In accordance with one aspect of this invention there is provided an apparatus for selectively electroplating a strip of material. The apparatus comprises a positioning means for receiving the strip, an open-top container for holding a quantity of electrolyte solution therein, an engagement means for sequentially engaging the strip, an advancement means for moving the engagement means a predetermined distance in a substantially rectilinear direction to transfer a portion of the strip to thereby cover the container, a seating means for engaging the upper surface of the strip and providing positive seating on the container, a retraction means for moving the engagement means said predetermined distance in a direction substantially opposite that of said advancement means, an anode for applying positive potential to the solution within the container, and a cathode for providing negative potential to the strip.

In accordance with another aspect of the present invention, there is provided a method for electroplating preselected areas on a strip of material. The method utilizes an open-top container having a quantity of electrolyte solution therein, an anode conductor for applying positive potential to the solution within the container, and a cathode conductor for applying negative potential to the strip, the method comprising the steps of positioning the strip within the apparatus, moving the strip a predetermined distance in a substantially rectilinear direction whereby a portion of the strip covers the open-top container, engaging the upper surface of the strip so that the strip is positively seated on the container, raising the solution level in the container so that the solution engages the preselected areas on the strip, and electrically actuating the anode and cathode conductors to thereby accomplish the electroplating.

BRIEF DESCRIPTION OF THE DRAWINGS

FIG. **1** is an isometric view of one embodiment of the apparatus of the present invention.

FIGS. **2–7** depict the various stages of operation of the apparatus of the present invention.

FIG. **8** is an isometric view of the open-top container of the present invention.

FIG. **9** is an isometric view depicting the adjustment means of the invention.

FIG. **10** illustrates one of the articles which can be plated utilizing the apparatus and method of the invention.

DESCRIPTION OF THE PREFERRED EMBODIMENTS

For a better understanding of the present invention, together with other and further objects, advantages and capabilities thereof, reference is made to the following disclosure and appended claims in connection with the above-described drawings.

With particular reference to FIG. **1**, there is illustrated an isometric view of electroplating apparatus **11** in accordance with a preferred embodiment of the present invention. Apparatus **11** is shown to comprise a positioning means **13**, an open-top container **15**, at least one engagement means **17**, an advancement means **19**, a seating means **21**, a retraction means **23**, at least one anode conductor **25** (illustrated in FIG. **8**), and at least one cathode conductor **27**.

Positioning means **13** is adapted for receiving a strip of material **29** and comprises a substantially horizontally aligned surfaced member **31** on which strip **29** is placed. Surfaced member **31** consists of any material which is non-abrasive to the material being plated. In the preferred embodiment, strip **29** is of a steel or iron composition while surfaced member **31** is preferably plastic. Member **31** is supported within apparatus **11** by a plurality of upstanding leg members **33** each fixedly positioned on the base **35** of the apparatus. As shown in FIG. **1**, a second surfaced member **31'** is also utilized to provide a means for receiving strip **29** after the strip has been plated. Member **31'** also has a plurality of upstanding leg members **33'** affixed thereto and to base **35**. Both surfaced members **31** and **31'** are supported by a common support member **37**, substantially centrally located in apparatus **11**.

Support **37** also provides a means for support for open-top container **15** which is shown as being oriented in a linear relationship with positioning means **13**. Container **15** is adapted for holding a quantity of electrolyte solution (not shown) therein and comprises a housing **39** of corrosion resistant material, a reservoir, illustrated as a pipe **41**, for transporting the solution, a valving means **43** affixed to pipe **41** for increasing or decreasing the rate of flow of the electrolyte within pipe **41**, and a masking means **45** for directly engaging the strip. Pressure to reservoir **41** and container **15** is supplied by an externally located pump (not shown). Any of several types of pumping mechanisms is suitable for the present invention and further description of such devices is not therefore believed warranted. Masking

means 45 has a plurality of plating ports positioned therein through which the solution will pass to engage the preselected areas to be plated on the strip. A more detailed description of open-top container 15 will be given further in the specification with the description of FIG. 8.

Engagement means 17 is oriented relative to positioning means 13 and is shown to comprise a plurality of pairs of fluid actuated cylinders 47 to each of which are affixed an upstanding pin 49. Although four pairs of cylinders are depicted, it can readily be seen that apparatus 11 could be further simplified to only include one pair. Additional simplification could also include the removal of surfaced member 31' as well as supports 33'. However, the arrangement as illustrated in FIG. 1 is preferred.

Actuation of engagement means 17 is achieved by a corresponding actuation of a fluid supply means (not shown) to supply fluid through one of the connective members 51. In doing so, pins 49 are upwardly moved to mate with corresponding opening 53 provided in strip 29. Actuation of the fluid supply means is achieved by an electro-mechanical operation involving an electrical switch and a solenoid which is actuated by electrical current flowing therethrough. When the corresponding switch is closed, the solenoid acts to either open or close a valve, depending on the function required. It is not believed necessary to further define the above described operation as this and similar types of electro-mechanical devices are well known in the art. The present invention does provide however a preferred embodiment regarding the location for the electrical switches as well as means for actuating them.

With particular regard to actuation of pins 49 to engage openings 53 in strip 29, the electrical function is accomplished by engagement of switch 55, located on base 35, which in turn opens a valve to permit fluid to enter the pairs of cylinders 47. Switch 55 is engaged by a protruding arm 57 located on a movable carriage 59 of advancement means 19.

Advancement means 19 functions to move engagement means 17 a predetermined distance in a substantially rectilinear direction so that a portion of strip is transferred to cover open top container 15. Means 19 comprises, as described, at least one carriage member 59 and a drive means 61 fixedly attached to carriage 59. In the preferred embodiment, four carriage members are utilized, each commonly joined to a common drive shaft 63. Positioned on each carriage 59 is one of the four described engagement means 17, thereby providing means for engaging strip 29 at several locations. Carriages 59 in turn ride on a pair of substantially parallel shafts 65 each of which are firmly positioned within bearings 67. Bearings 67 are affixed at opposing ends of base 35. To drive carriages 59, drive means 61 is provided and comprises a fluid actuated cylinder member. Cylinder 61, as are cylinders 47, is actuated by an electro-mechanical assembly in which fluid is alternately supplied via pipes 69. Switch 71, located on an upstanding support 73 substantially adjacent seating means 21, provides the electrical portion of the above described arrangement and is actuated by an arm member 74 located on the upwardly displaced means 21. With switch 71 actuated as illustrated, drive means 61 thereby drives carriage 59 in the direction indicated. To facilitate movement of strip 29 along surfaced member 31, a longitudinal guide means, illustrated as a pair of opposingly positioned upstanding wall members 76 is provided. Each wall is adapted for engaging a corresponding side of strip 29. A second pair of walled members 76' is similarly provided on second surfaced member 31' to facilitate movement of strip 29 after completion of the plating operation.

Seating means 21 is substantially vertically oriented above open-top container 15 and comprises an upper ram member 75 fixedly attached to and powered by a movement means 77. Ram member 75 is comprised of a metallic bar 79 with a solid portion 81 of resilient material such as neoprene rubber positioned thereon. A cathode conductor 27, illustrated as an elongated strip of electrically conductive material, is positioned on resilient strip 81 and is adapted for engaging strip of material 29 when ram 75 is lowered. Movement means 77 comprises a fluid actuated cylinder 83 which is attached to bar 79 and maintained in position by supportive means 85.

Activation of seating means 21 is also achieved utilizing an electro-mechanical operation substantially similar to that of engagement means 17 and advancement means 19. Fluid is alternately supplied via piping 87 when electrical switch 89 is depressed by a second arm 91 located on carriage 59. As can readily be seen, switch 89 is actuated to provide the electrical portion of the above described movement only when carriage 59 is in the forward position, or advancing thereto.

When ram 75 lowers to engage strip 29, arm member 74 trips switch 93 located below switch 71. Engagement of switch 93 serves to actuate a timer (not shown) and to provide the electrical portion of an electro-mechanical operation to alternate the fluid pressure in connective members 51. The timer, once started, provides the control means for supplying electrical energy to the anode and cathode members. Additionally, the timer controls valving means 43 to thereby open the valve and increase the level of electrolyte within open top container 15. The raised level passes through masking means 45 of the container and engages the preselected areas on the strip. With the electrical energy now present, electrodeposition of the electrolyte on strip 29 is achieved.

As stated, activation of switch 93 has the effect of reducing the fluid pressure in connective means 51 and therefore on cylinders 47. The result is that pins 49 are lowered to disengage openings 53 in the strip. When pins 49 lower, an arm member 95 located on one of the pins effects activation of switch 97 which in turn causes the return of carriage members 59. This is achieved by switch 97 providing the electrical portion of still another electro-mechanical function in which fluid pressure to drive means 61 is alternated in pipes 69. The result is that drive means 61 retracts drive shaft 63 the previously traversed rectilinear distance, this time in a substantially opposite direction. Thus, it can be seen that a retraction means has been provided for returning carriage 59 to the original starting position depicted in FIG. 1.

For a description of the various steps of operation of apparatus 11, reference is made to FIGS. 2–7 wherein several side elevational views of the electroplating apparatus in accordance with a preferred embodiment of the present invention are illustrated.

In FIG. 2, strip 29 is illustrated as being engaged by pins 49. Ram 75 is fully upwardly displaced and switch 71 is engaged. Switch 55 is also engaged and the appa-

ratus is now in the preferred starting position. In order for apparatus **11** to remain in the present position so that an operator may position strip **29** thereon, an external master is utilized to effectively disengage switches **55** and **71,** as well as the remaining switches of apparatus **11,** from the current supply. With the master switch open, strip **29** is positioned on upstanding pins **49.** The master switch is then closed starting the apparatus. As previously described, engaged switch **71** effects the advance of carriages **59.** This movement in turn moves strip **29** in the substantially rectilinear direction indicated along surfaced member **31.** This movement occurs until second arm **91** engages switch **89** which trips ram **75** down. Once ram **75** disengages switch **71,** forward advance of carriages **59** is terminated. Ram **75** lowers to engage an upper surface of strip **29,** thereby securing positive seating of strip **29** on open-top container **15.** This seating is illustrated in FIG. **5.** At the same time, ram **75** effects engagement of switch **93** which trips pins **49** down, thereby disengaging strip **29.** At this time, the previously described timer is started to provide the electrical energy for a predetermined time period to the apparatus's cathode and anode members. Pins **49** in turn trip switch **97** which results in carriages **59** being returned as indicated in FIG. **6.** In FIG. **7,** the carriages have been retracted to a position in which switch **55** is once again actuated. Switch **55,** as previously described, trips pins **49** upward to engage openings **53** within the strip. The operation cycle of the above-described timer is designed to terminate at this time. This timer is also electrically joined to the circuitry controlling movement of ram **75.** Therefore, when the timer terminates its cycle, ram **75** is upwardly driven where it then once again actuates switch **71.** Thus, it can be seen that a complete cycle of operation of apparatus **11** has been accomplished and strip **29** is once again ready for advancement.

In FIG. **8** there is shown a preferred embodiment for the open-top container **15** to be utilized with apparatus **11.** Container **15** comprises a housing **39** of corrosion resistant material, a reservoir, illustrated as pipe **41** for supplying electrolyte solution to the container and a masking means **45** positioned on housing **39** and adapted for engaging the strip to be plated. In the preferred embodiment, anode conductor **25** is positioned within housing **39** and is adapted for having access to chamber **26** located with the housing. Although it is possible to utilize an open-top container having but one chamber **26** therein, in the preferred embodiment, several chambers are incorporated within housing **39,** each having access to one of the several plating ports **28** located within masking means **45.** Solution is supplied chambers **26** via an access slot **30** located within reservoir **41.** As illustrated, housing **39** comprises a four-layered member in which upper layer **32** serves as a holder for masking means **45.** Upper layer **32** is preferably of stainless steel composition while the material preferred for masking means **45** is of any suitable rubber composition, such as neopreme. Second and third layers **34** and **36,** respectively, comprise the gasket region of container **15** and are preferably of essentially the same material as masking means **45.** Bottom layer **38** of housing **39** is preferably of stainless steel composition and has a rounded portion **40** provided thereon for mating with reservoir **41.** The joining of all four layers of housing **39,** as well as the positioning of reservoir **41** against bottom layer **38,** can be accomplished utilizing a bonding epoxy or similar type cementing agent.

With reference to FIG. **9,** there is illustrated an adjustment means **101** which can be utilized with the present invention in order to decrease or increase the spacings between cylinders **47.** This in turn decreases or increases the spacings between opposing upstanding pins **49** thereby providing a means whereby strips of material of different widths can be accommodated on apparatus **11.** Adjustment means **101** consists of a pair of block members **103** and **103'** respectively, each positioned on one of cylinders **47.** Each block member is internally threaded and adapted for engaging a positioning shaft **105.** Shaft **105** has a pair of opposing threaded portions **107** and **107'** respectively, which are each oppositely threaded from the other. More specifically, portion **107** is provided with right-hand threading while portion **107'** is provided with left-hand threading. Accordingly, block members **103** and **103'** are provided with internal threading corresponding to the threaded portion engaged therein. Shaft **105** has a pair of non-threaded end portions **109** and **109'** respectively, which are rotatably positioned within bearings **111** and **111'** respectively. Bearings **111** and **111'** are fixedly positioned on carriage **59.** An adjusting knob **113** is located on end **109** which, when rotated either clockwise or anticlockwise, will either draw cylinders **47** closer together or substantially increase their respective spacing. In conjunction with the above described motion, a channel **115** is provided in carriage **59** in which cylinders **47** may slidably move.

In FIG. **10** can be seen one example of the material that apparatus **11** is capable of electroplating. Strip **29** comprises a plurality of individual lead frame members **117** positioned therein in the manner indicated. One row **119** consists of several frames **117** therein, with strip **29** comprising several individual rows (the remaining indicated in phantom). In the enlarged portion of FIG. **10,** one example of a frame member **117** is shown. Located on frame member **117** is an individual discrete area **121** (cross-hatched) which may be plated utilizing the apparatus and method of the present invention. Strip **29,** usually of a stainless steel composition, will be later cut into sections of individual rows **119** each, after which each frame member **117** will be separated therefrom. Frame members **117** are each incorporated into integrated circuit packages with discrete areas **119** providing a bonding pad for the relatively small circuit or "chip" member. Electrical deposition of discrete area **121** would also include end portions **123** of the leads of frame **117,** thereby substantially increasing the electrical conducting properties in these areas of the strip. In performing the above electro-deposition, a preferred electrolyte consists of an acidulated solution of gold salts, although several other electrolytic solutions are capable of being utilized with the present invention. Thus, there has been shown and described an apparatus and method whereby preselected areas on a strip of material have a metallic plating disposed thereon.

While there has been shown and described what are at present considered the preferred embodiments of the invention, it will be obvious to those skilled in the art that various changes and modifications may be made therein without departing from the scope of the invention as defined by the appended claims.

What is claimed is:

1. An apparatus for selectively electroplating a strip of material, said apparatus comprising:
positioning means adapted for receiving said strip of material in said apparatus;
an open-top container adapted for holding a quantity of electrolyte solution therein, said container oriented in linear relationship with said positioning means;
an anode conductor positioned substantially within said open-top container and adapted for applying positive potential to said electrolyte solution within said open-top container;
engagement means oriented relative to said positioning means and adapted for sequentially engaging said strip of material;
advancement means for moving said engagement means a predetermined distance in a substantially rectilinear direction to transfer a portion of said strip to cover said open-top container;
a substantially solid seating means substantially vertically oriented above said open-top container, said seating means adapted for engaging the upper surface of said strip to thereby provide positive seating of said strip on said container;
at least one cathode conductor positioned substantially within said seating means and adapted for applying negative potential to said strip of material; and
retraction means for moving said engagement means said predetermined distance in a direction substantially opposite to said rectilinear direction of said advancement means when said engagement means disengages said strip of material.

2. The apparatus according to claim 1 wherein said positioning means adapted for receiving said strip of material comprises a substantially horizontally aligned surfaced member, said member adapted for having said strip of material positioned thereon.

3. The apparatus according to claim 1 wherein there is included a longitudinal guide means, said longitudinal guide means relatedly positioned with said positioning means to facilitate the guiding of said strip in a rectilinear manner therealong.

4. The apparatus according to claim 3 wherein said longitudinal guide means comprises a pair of oppositely positioned upstanding wall members, said wall members adapted for engaging the sides of said strip of material.

5. The apparatus according to claim 1 wherein said open-top container adapted for holding a quantity of electrolyte solution comprises a housing of corrosion resistant material having at least one chamber located therein for receiving said electrolyte solution, a reservoir of electrically insulative and corrosion resistant material and adapted for transporting said electrolyte solution, said reservoir having access to said chamber within said housing, a valving means affixed to said reservoir for increasing or decreasing the rate of flow of said electrolyte solution within said reservoir, and a masking means positioned atop said housing, said masking means having a plurality of plating ports therein through which said electrolyte solution within said chamber may pass to engage said strip of material.

6. The apparatus according to claim 5 wherein said anode conductor adapted for applying positive potential to said electrolyte solution is positioned substantially within said housing member of said open-top container and is adapted for having access to said chamber within said housing.

7. The apparatus according to claim 5 wherein said housing of said open top container has a plurality of chambers located therein, each of said chambers having access to one of said plating ports within said masking means whereby electrolyte solution within each of said chambers may pass to engage said strip of material.

8. The apparatus according to claim 7 wherein said anode conductor adapted for applying positive potential to said electrolyte solution is positioned substantially within said housing member of said open-top container and is adapted for having access to each of said chambers within said housing.

9. The apparatus according to claim 1 wherein said engagement means oriented relative to said positioning means comprises a plurality of upstanding pin members, each of said pin members fixedly attached to a motion means and adapted for engaging a corresponding opening within said strip of material.

10. The apparatus according to claim 9 wherein said motion means comprises a plurality of fluid actuated cylinder members.

11. The apparatus according to claim 9 wherein said advancement means for moving said engagement means a predetermined distance in a substantially rectilinear direction to transfer a portion of said strip to cover said open-top container comprises at least one movable carriage member and a drive means adapted for driving said carriage member, said motion means of said engagment means adapted for being positioned on said carriage member.

12. The apparatus according to claim 1 wherein said drive means comprises a fluid actuated cylinder member.

13. The apparatus according to claim 1 wherein said seating means substantially vertically oriented above said open-top container and adapted for engaging the upper surface of said strip to thereby provide positive seating of said strip on said container comprises an upper ram member, said ram member actuated by a movement means.

14. The apparatus according to claim 13 wherein said movement means comprises a fluid-actuated cylinder member.

15. The apparatus according to claim 13 wherein said cathode conductor adapted for applying negative potential to said strip of material is fixedly positioned on said upper ram member and is adapted for contacting said strip when said ram member engages the upper surface of said strip.

16. The apparatus according to claim 11 wherein said retraction means for moving said engagment means comprises a drive means adapted for driving said carriage member.

17. The apparatus according to claim 16 wherein said drive means of said advancement means and said drive means of said retraction means are the same.

18. A method for electroplating preselected areas on a strip of material utilizing an apparatus comprising an open-top container adapted for holding a quantity of electrolyte solution therein, at least one anode conductor positioned substantially within said open-top container and adapted for applying positive potential to said electrolyte solution within said open-top container, a substantially solid seating means adapted for engaging the upper surface of said strip to thereby pro-

vide positive seating of said strip on said open-top container, and at least one cathode conductor positioned substantially within said seating means and adapted for applying negative potential to said strip of material, said method comprising:

positioning said strip of material within said apparatus;

moving said strip of material a predetermined distance in a substantially rectilinear direction whereby a portion of said strip covers said open-top container;

engaging the upper surface of said strip with said substantially solid seating means whereby said strip is positively seated on said open-top container;

raising the level of electrolyte solution within said open-top container whereby said solution engages said preselected areas on said strip; and

applying electrical energy in a manner that said anode conductor provides positive potential to said electrolyte solution within said open-top container and said cathode conductor provides negative potential to said strip of material.

19. The method according to claim **18** wherein the raised level of said electrolyte solution maintains a constant pressure against said preselected areas on said strip of material during the plating operation.

* * * * *

UNITED STATES PATENT OFFICE

CERTIFICATE OF CORRECTION

PATENT NO. : 3,860,499

DATED : January 14, 1975

INVENTOR(S) : Earl R. Graham, Joseph P. Lagermasini, Kenneth H. Shaner and David H. Hopkins

It is certified that error appears in the above-identified patent and that said Letters Patent are hereby corrected as shown below:

Column 3, line 43 - Please delete "strip is" and insert -- strip 29 is --.

Column 5, line 4 - Please delete "master is" and insert -- master switch is --.

Column 6, line 51- Please delete "frame 117" and insert -- frame member 117 --.

Column 8, line 33- Please delete "according to Claim 1" and insert -- according to Claim 11 --.

Signed and sealed this 27th day of May 1975.

(SEAL)
Attest:

RUTH C. MASON
Attesting Officer

C. MARSHALL DANN
Commissioner of Patents
and Trademarks