April 29, 1941. S. C. KNOX 2,239,821

FRACTURE FRAME

Filed Aug. 1, 1939 4 Sheets-Sheet 1

Fig. 1.

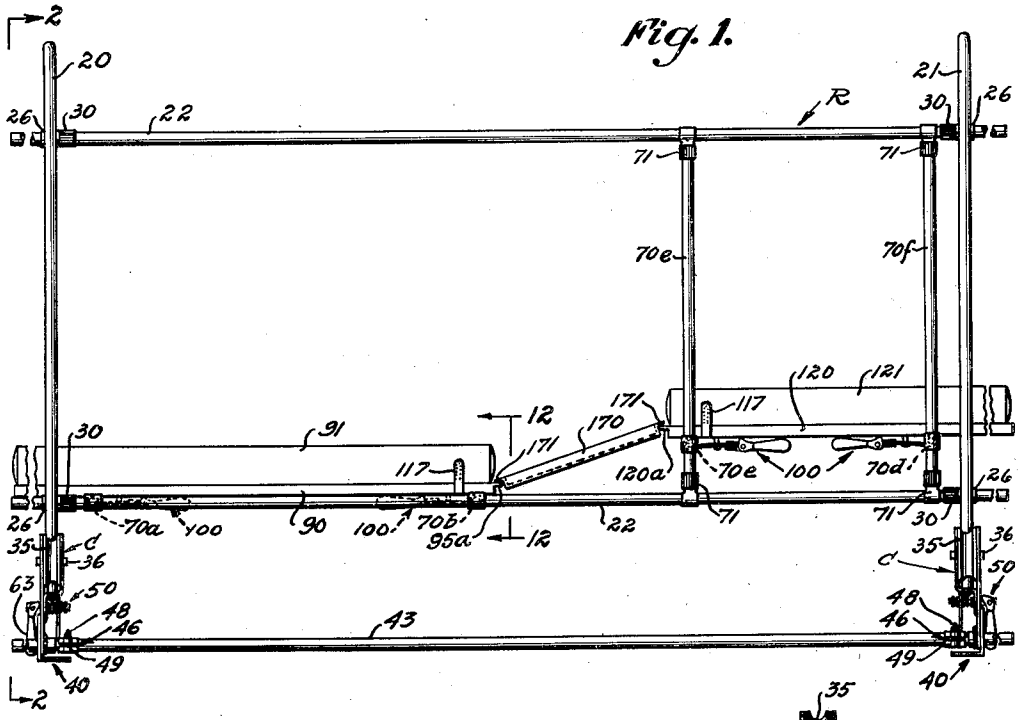

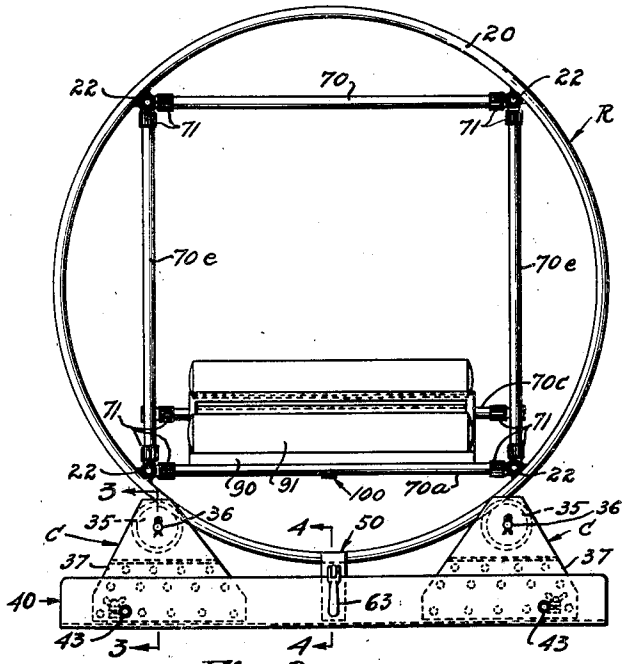

Fig. 2.

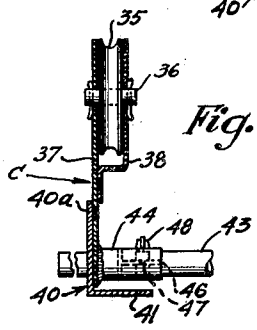

Fig. 3.

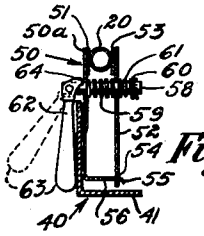

Fig. 4.

Inventor.
Stuart C. Knox.

Attorney.

April 29, 1941. S. C. KNOX 2,239,821

FRACTURE FRAME

Filed Aug. 1, 1939 4 Sheets-Sheet 2

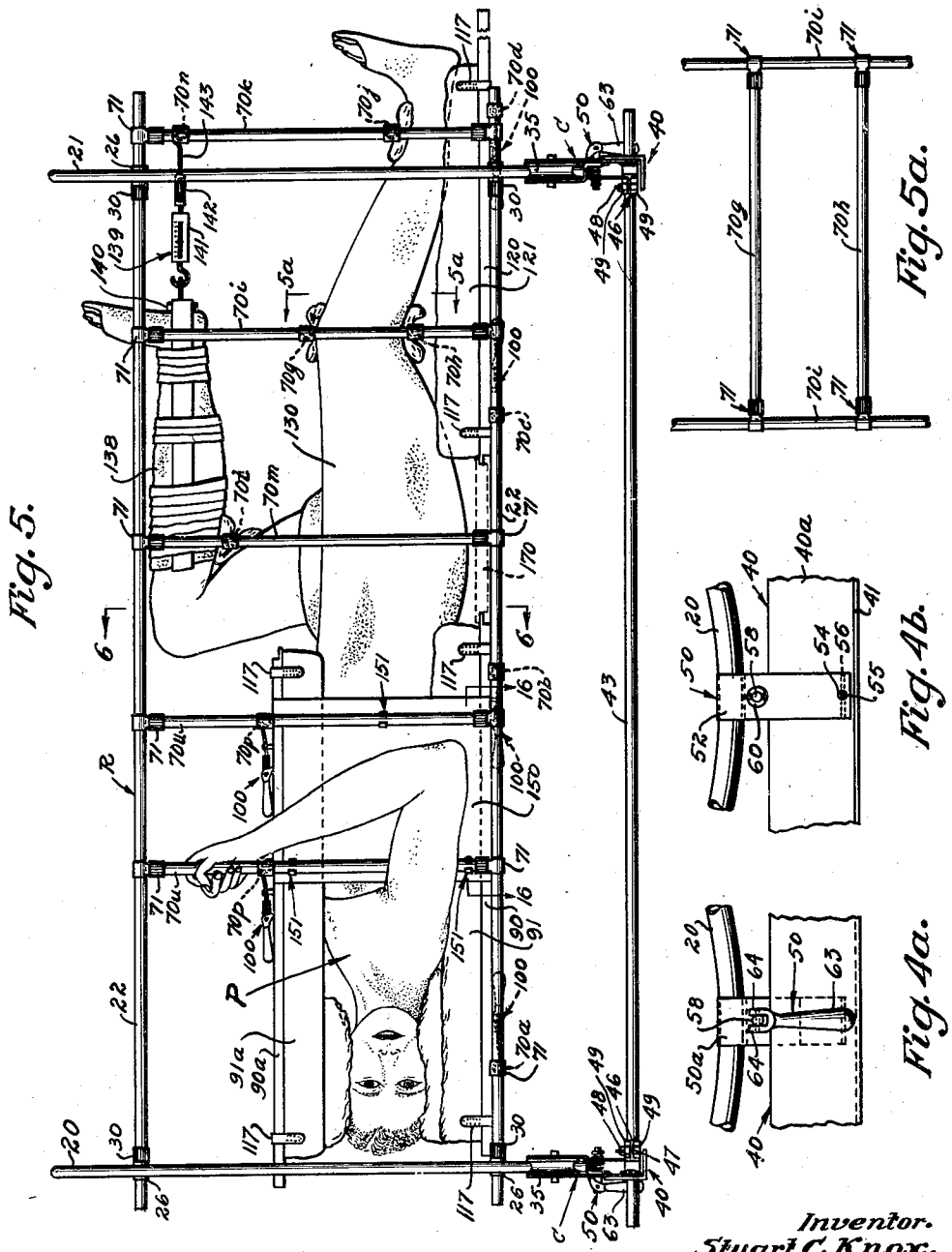

Fig. 5.

Fig. 5a.

Fig. 4b.

Fig. 4a.

Inventor.
Stuart C. Knox.

Attorney.

April 29, 1941. S. C. KNOX 2,239,821

FRACTURE FRAME

Filed Aug. 1, 1939 4 Sheets-Sheet 3

Fig. 6.

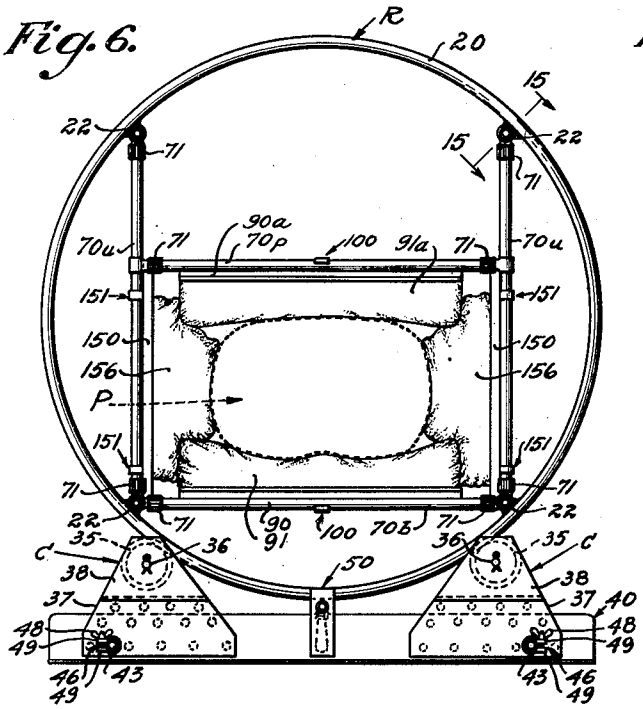

Fig. 7.

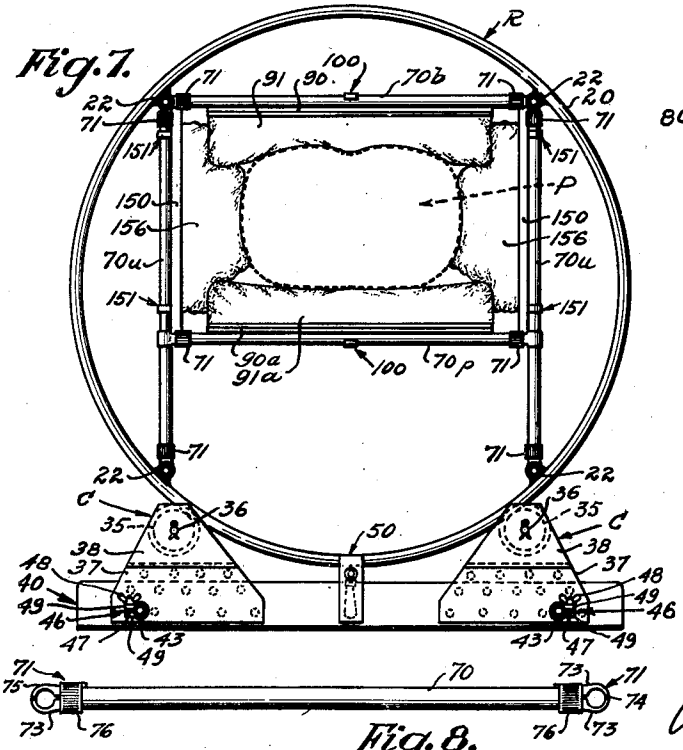

Fig. 8.

Fig. 9.

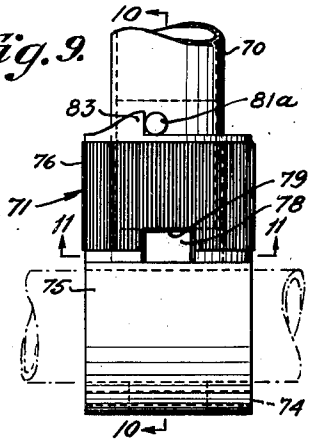

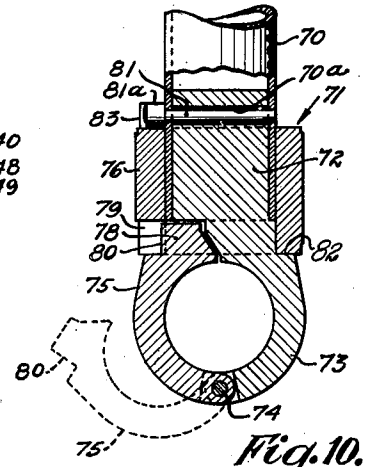

Fig. 10.

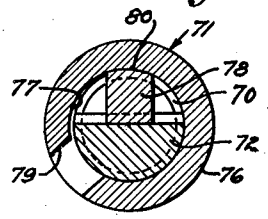

Fig. 11.

Inventor.
Stuart C. Knox.

Attorney.

April 29, 1941. S. C. KNOX 2,239,821

FRACTURE FRAME

Filed Aug. 1, 1939 4 Sheets-Sheet 4

Fig. 12.

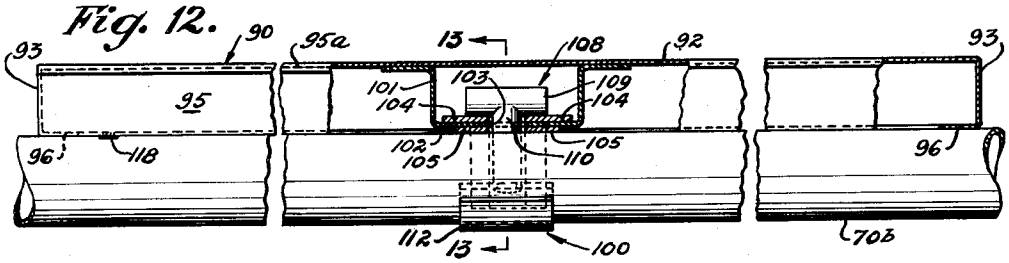

Fig. 13.

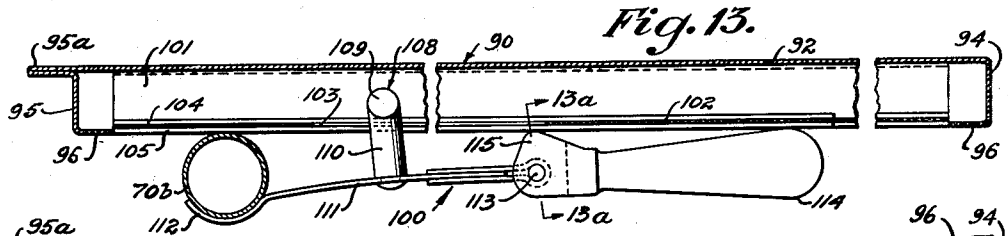

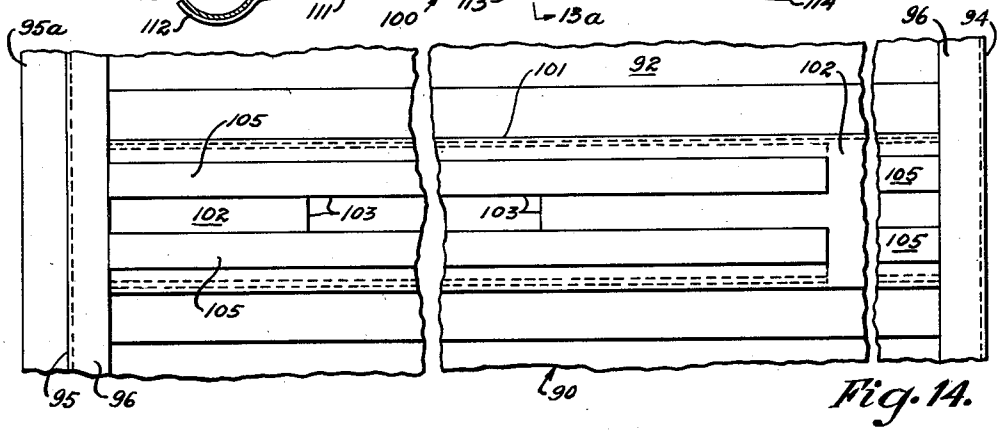

Fig. 14.

Fig. 15.

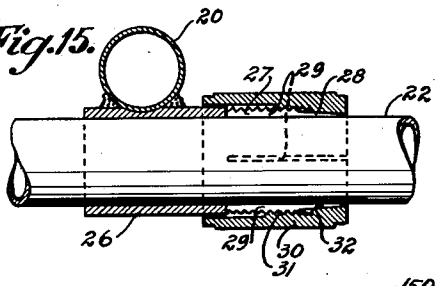

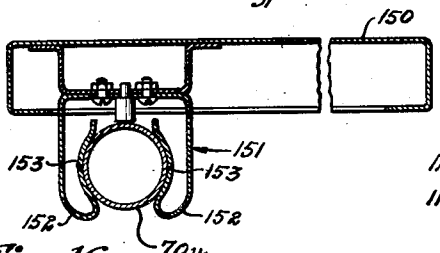

Fig. 16.

Fig. 17.

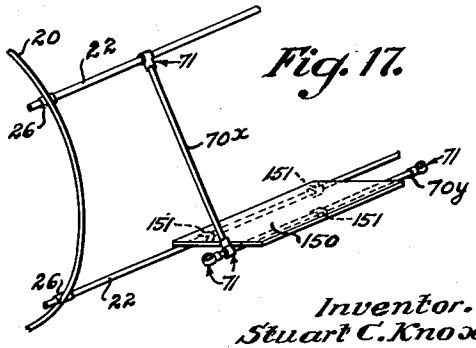

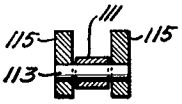

Fig. 13a.

Inventor.
Stuart C. Knox.

Attorney.

Patented Apr. 29, 1941 2,239,821

UNITED STATES PATENT OFFICE

2,239,821

FRACTURE FRAME

Stuart C. Knox, Los Angeles, Calif., assignor to Medical Engineering Company, Los Angeles, Calif., a copartnership composed of Stuart C. Knox, T. Keith Glennan and Daniel Cornwall Hickson

Application August 1, 1939, Serial No. 287,779

6 Claims. (Cl. 5—61)

This invention relates generally to fracture frames, and more particularly to apparatus for supporting patients suffering from fractures of various varieties requiring immobilization in bed, either in casts or in traction apparatus, for long periods of time.

It is a matter of common medical knowledge that nursing care for fracture patients requiring immobilization in bed is extremely difficult, and also that previously employed fracture frames, which are designed to be fastened to the bed, allow alteration of the force and direction of any applied traction apparatus when the patient is moved in the bed. If the patient is confined in a cast, the problem is principally concerned with the matter of turning or moving the patient and cast, a task usually maneuvered clumsily and with difficulty for both patient and nurses.

The general object of the present invention is to provide a fracture frame within which many types of fracture patients may be immobilized, and which enables the patient to be turned from side to side or completely over without interfering with the immobilization of the injured parts or with applied traction apparatus.

In accordance with the present invention, there is provided a light, cylindrical frame, within which may be placed a patient confined in a plaster cast and/or requiring the application of traction and counter-traction apparatus. This frame is supported for rotation about its longitudinal axis within a stationary cradle, in such a manner as to permit easy rotation of the frame about said axis, and so that the patient together with all of his encumbering apparatus may be turned over, partially or completely, as may be desired, without producing any distortion of his body and especially of the alinement of any injured portion thereof. The invention provides a system of cross-bars and braces attachable to the rotatable frame in a variety of ways to accommodate the requirement of different cases, these cross bars providing support for the mattress and for construction of various types of apparatus which may be required.

It is a matter of common medical knowledge that a fracture patient should not be moved any more than is absolutely essential prior to splinting of the injured parts. In the ordinary case, under present practice, the patient is nevertheless lifted about considerably during transportation to the hospital, lifting to and from litters, X-raying, and finally placing in the hospital bed. A further purpose of the present invention is to provide a fracture frame capable of quick assembly out of a group of standard members, and a part of which may first be assembled to form a stretcher on which the patient can be transported to and about the hospital, and which may then be completed to form the full fracture frame. Thus a part of the apparatus, in the form of a stretcher, may in appropriate cases be transported to the injured patient, and when the patient has been once positioned thereon, he may remain there, not even being removed for X-raying. When the patient is ready to be placed in bed, the stretcher is simply converted into the complete fracture frame by building thereon certain additional structure.

Various additional objects and features of the invention will appear and be described in the course of the following detailed description of a present illustrative embodiment of the invention, reference for this purpose being had to the accompanying drawings, in which:

Fig. 1 is a side elevation of the fracture frame in accordance with the invention;

Fig. 2 is an end elevation of the fracture element being a view taken in the direction of arrows 2—2 of Fig. 1;

Fig. 3 is a detail section taken on line 3—3 of Fig. 2;

Fig. 4 is a detail section taken on line 4—4 of Fig. 2;

Fig. 4*a* is an enlarged detail of a portion of Fig. 2;

Fig. 4*b* is a view looking at the clamp device of Fig. 4 from the right;

Fig. 5 is a view similar to Fig. 1, but showing a typical application to one type of patient;

Fig. 5*a* is a detail taken on line 5*a*—5*a* of Fig. 5;

Fig. 6 is a section taken on line 6—6 of Fig. 5;

Fig. 7 is a section similar to Fig. 6, but showing the apparatus rotated through 180° to invert the patient;

Fig. 8 is a detail of one of the cross bars;

Fig. 9 is an enlarged detail of a cross bar clamp;

Fig. 10 is a section on line 10—10 of Fig. 9;

Fig. 11 is a section one line 11—11 of Fig. 9;

Fig. 12 is a detail section taken as indicated by line 12—12 of Fig. 1, certain parts being broken away and the small platform between the two mattress platforms being omitted;

Fig. 13 is a section taken on line 13—13 of Fig. 12;

Fig. 13*a* is a detail section taken on line 13*a*—13*a* of Fig. 13;

Fig. 14 is a view of the underside of the mattress supporting frame, showing a clamp-receiving slot,

the clamp device cooperable therewith being omitted;

Fig. 15 is a detail section on line 15—15 of Fig. 6;

Fig. 16 is a detail section on line 16—16 of Fig. 5; and

Fig. 17 is a detail perspective showing an arm rest.

In the drawings, numerals 20 and 21 designate a pair of light hoops or rings of tubular cross section, which are connected by four equally spaced longitudinal tubular members or rails 22, the members 20, 21 and 22 forming a generally cylindrical rotatable frame R within which the patient is positioned and immobilized. In order to enable ready assembly and disassembly of the apparatus, and also to permit adjustment of the distance between the two rings 20 and 21, as may occasionally be required with different types of patients, the connections between the longitudinal rails 22 and the rings 20 and 21 are of such a nature as will permit the rails 22 to be readily moved in a longitudinal direction relatively to the rings, and to be clamped in any adjusted position. Fig. 15 shows one typical and present preferred quickly releasable connection means between the longitudinal rails 22 and rings 20 and 21. As shown in said figure, which is a section on line 15—15 of Fig. 6, the rail 22 is slidably received within a sleeve 26 which is welded to the end ring, in this case ring 20. This sleeve 26 has near one end a screw-threaded section 27 and a tapered portion 28 beyond said screw-threaded section, the tapered and threaded portions of the sleeve being longitudinally split as indicated at 29. This split portion of sleeve 26 is adapted to be compressed to apply a clamping force to rail 22 by means of a clamp ring 30 having internal screwthreads 31 engaging the threaded section 27 of sleeve 26 and having a tapered portion 32 engaging the tapered end portion 28 of the sleeve. When this ring 30, which is externally knurled or ribbed for convenience in gripping, is tightened on sleeve 26, the interengagement of the described tapered surfaces causes the split portion of sleeve 26 to become compressed and clamped tightly to tubular rail 22.

Rings 20 and 21 are each supported at the bottom by a pair of horizontally spaced rollers 35, each of which is mounted on a shaft 36 carried by a vertical supporting plate 37 and a bracket 38 mounted on plate 37. The two plates 37 carrying the rollers 35 for each end ring of the apparatus are secured to and supported by the vertical flange 40*a* of an angle member 40 having a floor flange 41 (see Fig. 3). The angle members 40 at the two ends of the apparatus are connected by longitudinal tubular members 43, which are slidably received in sleeves 44 welded to supporting plates 37 (Fig. 3), plates 37 and angle members 40 being suitably bored to pass the projecting ends of the members 43. Sleeves 44 are split, as indicated at 46, and are adapted to be clamped tightly to members 43 by screws 47 and wing nuts 48, screws 47 passing through lugs 49 formed on said sleeves. Thus by virtue of this adjustment means, the supporting members 40, which are adapted to rest on the longitudinal rails of a standard hospital bed, may be moved toward or from one another to accommodate the desired spacing distance between end rings 20 and 21.

The frame R consisting of the end hoops 20 and 21 and the four connecting members 22 is thus rotatable by a rolling action of hoops 20 and 21 on the rollers 35 of the stationary cradle C made up of the described end members 40 and connecting members 43. As a means for locking frame R against rotation in this cradle C, I here show a typical clamp device 50 (see Figs. 2 and 4), one of which is preferably mounted on each of the angle members 40, these clamp devices being adapted to apply a positive braking action on the end hoops of the rotating frame. The preferred clamp here shown for illustrative purposes (Figs. 2 and 4) comprises a somewhat springy clamp arm 50*a* mounted on and projecting upwardly from one of the angle members 40, the upper end portion of which is provided with a pad 51, of felt or the like, adapted to bear against the side of ring 20. An opposed clamp arm 52, the upper end portion of which has a pad 53, similar to pad 51, is arranged to bear against the opposite side of ring 20. This clamp arm 52 is mounted at its lower end for movement toward and from ring 20; as here illustratively shown, the lower end of arm 52 has an aperture 54 through which projects a tongue 55 on the end of a supporting arm 56 mounted on the vertical flange 40*a* of angle member 40. A clamping shaft 58 passes through arms 50*a* and 52 below ring 20, and disposed about this shaft between arms 50*a* and 52 is a coil compression spring 59, while disposed about said shaft between arm 52 and a washer 60 supported near the end of the shaft is a coil spring 61. A clamping lever 62 comprising a handle 63 and a pair of arms or cam lugs 64 is pivotally mounted on the other end of shaft 58, in the arrangement clearly illustrated in Figs. 2, 4*a* and 4, cam lugs 64 being arranged to bear on the surface of arm 50*a* on opposite sides of shaft 58. When clamp handle 63 is moved from the full line to the dotted line position of Fig. 4, shaft 58 is drawn in a left-handed direction relatively to the two clamp arms, and the clamp arms are caused to engage ring 20 under the pressure of spring 61, thus locking the ring against rotation on supporting rollers 35. When clamp handle 63 is moved to the full line position of Fig. 4, the shaft 58 moves a short distance toward the right under the action of the springs, the spring 59 acting to spread the clamp arms apart, and the ring 20 thus being released for rotation.

A number of tubular cross bars are provided, such as indicated at 70 in Fig. 8, and at 70*a*, 70*b*, etc., in the other figures, each cross bar having at opposite ends clamp devices 71 by which said cross bars may be tightly clamped to the longitudinally extending members 22 of the rotatable frame, or to other cross-bars 70. These cross bars are of such length that they will just fit between the four, equally spaced longitudinal members 22, or between any two parallel cross bars 70 which have been clamped to the members 22, as will later be more fully described.

A present preferred clamp device 71 by which these bars 70 may be easily clamped to and released from the members 22, and which, when in clamping position, so tightly grips the members 22 as to be incapable of displacement therealong, is shown in detail in Figs. 9 to 11. As shown in said figures, there is received within the end of the tubular cross bar a shank 72 having extending therefrom a substantially semicylindric clamp portion 73 adapted to fit approximately half-way around one of the longitudinal members 22 of the rotatable frame. Hinged to member 73, as at 74, is a substantially

semi-cylindric closure member **75**, which is adapted to swing between the open and closed positions shown in dotted lines and in full lines in Fig. 10. A clamping sleeve **76** rotatable on the end of the tubular cross bar **70** has an internal cam surface **77** overriding a lug **78** projecting from the hinged closure member **75**, and also has a notch **79** adapted to pass lug **78** when rotated into alinement therewith (see Fig. 9). The clamp device being in the position of Fig. 9, rotation of sleeve **76** to the position of Fig. 11 causes cam surface **77** to engage against surface **80** on the outer side of lug **78**, the locking sleeve becoming wedged tightly against lug **78** so that it is restrained against displacement by the frictional engagement with said lug. To release the clamp, locking sleeve **76** is simply rotated in the reverse direction until lug **78** is alined with aperture **79**, whereupon closure **75** may be swung outwardly to the dotted line position of Fig. 10. Sleeve **76** is confined against endwise movement on tubular cross bar **70** between an enlarged head **81***a* on the end of a pin **81** extending through tubular member **72**, and a shoulder **82** formed at the base of clamp member **73**. A stop lug **83** formed on sleeve **76** engages pin **81** when locking lug **78** is in alinement with aperture **79**, this provision enabling the position at which the clamp device may be opened to be readily found.

Shank **72** is preferably fit somewhat loosely within the end of tubular cross-bar **70**, its transverse bore **70***a* through which pin **81** extends being somewhat oversize, as indicated, and the shank being capable of comparatively free longitudinal as well as rotational movement within member **70**, within the limits, of course, provided by oversize bore **70***a* and pin **81**. This provision enables the cross-bar to be more readily clamped between the longitudinal members, it being apparent that if no such play were provided, the slightest difference in distance from center to center of the members **22** and from center to center of the clamp devices at the two ends of the connecting cross bar would otherwise make the cross bars difficult to assemble with the frame. This provision, of course, also enables the cross bars to be more readily mounted between two other cross bars already on the frame, and also enables ready movement of the cross bars along any two parallel members simply by releasing the clamping pressure somewhat. The described play between the clamp members and cross bars also aids in forming a tight grip between the cross bar and the members to which it is clamped when weight is imposed on the cross bar. Thus, assuming a horizontal cross bar clamped between two parallel vertical members, the imposition of weight on the horizontal member causes its clamp devices to become cocked very slightly out of alinement, this having the effect of causing the clamps to bite more tightly into the vertical members. This desirable action would of course not obtain if the clamps were rigidly mounted on the ends of the cross bar.

Reference is here made to a copending application of Edward R. Chilcott, Harold J. Hill and Walter H. Righter, entitled, "Clamp device," filed August 23, 1939, Ser. No. 291,566, in which the above described clamp device is disclosed and claimed per se.

The described cross bars **70**, **70***a*, **70***b*, etc., are clamped between the longitudinally extending tubular members **22** and between each other for a variety of purposes, among which is the support of the mattresses on which the patient is rested. Thus, a pair of cross bars **70***a* and **70***b* are shown as clamped between the two lower longitudinal rods **22** (see Figs. 1, 2 and 6), the member **70***a* being positioned close to end ring **20** and the member **70***b* being positioned approximately or nearly half-way of the distance from ring **20** to ring **21**. A mattress-supporting platform **90** is mounted on this pair of cross rods **70***a* and **70***b*, being releasably clamped thereto as presently to be described. This platform **90** is rectangular in outline, and of approximately the length and breadth dimensions of the half-length mattress **91** which is employed. As shown in Figs. 12, 13 and 14, platform **90**, which is preferably fabricated of sheet metal, typically comprises a top wall **92**, sides **93**, ends **94** and **95**, the latter having a projecting flange portion **95***a*, and inwardly turned bottom flanges **96**, which are adapted to rest directly on cross bars **70***a* and **70***b*.

For the purpose of releasably clamping this platform **90** to cross bars **70***a* and **70***b*, a pair of quick-releasable clamp devices **100** are employed, a preferred form of which is shown in Figs. 12 and 13. Secured to the underside of the top wall **92** of platform **90** is a supporting member or bracket **101** embodying a longitudinally slotted wall **102** spaced below the top wall **92**, the slot being indicated at **103**. This slotted wall **102** is braced above and below and on both sides of slot **103** with bracing strips **104** and **105**. A T-member **108** has its cross part **109** received in the space between wall **102** and wall **92**, with its shank **110** projecting through the slot **103** in wall **102**. Secured to the depending end of this shank **110** is a somewhat springy clamp arm **111**, having at one end an arcuate portion **112** adapted to engage a cross bar, as bar **70***b*, and having pivotally connected to its opposite end, as at **113**, a handle member **114** having a pair of cam lugs **115** adapted to engage strips **105** on opposite sides of slot **103**. With the parts in the position of Fig. 13, clamp arm **111** is braced against the underside of cross bar **70***b*, and is under flexure and acting through T-member **108** to hold platform **90** tightly down to cross bar **70***b*. The clamping construction at but one end of platform **90** is illustrated in Figs. 12 to 14, it being understood that this construction is duplicated at the other end, a second clamping device **100** being employed for holding the platform down to the other cross-bar **70***a*.

The mattress **91** may be of any suitable type, and is preferably provided with some convenient means for fastening it to its platform **90**; for example, straps **117** secured to the mattress may be fastened to the underside of platform **90** as by means of conventional snaps, indicated in Fig. 12 at **118**.

The described half-length mattress supporting platform **90** and mattress **91** are for the upper portion of the patient, a separate mattress supporting platform **120** and mattress **121**, of construction exactly similar to that of platform **90** and mattress **91**, but shorter in length, being provided for the legs of the patient, and being positioned in the frame at a certain spacing from platform **90** and mattress **91**, as typically indicated in Fig. 5, and also in Fig. 1. In Fig. 5, this second mattress supporting platform **120** and its mattress **121** are supported by cross members indicated at **70***c* and **70***d* which are connected between the lower longitudinal members

22. The horizontal cross bars 70c and 70d will be understood to be connected or clamped between the lower longitudinal members 22 in exactly the same way as are members 70a and 70b. Fig. 1 shows a modified arrangement, in which the platform 120 and its mattress 121 are mounted on cross bars 70c and 70d, which in this instance, instead of being secured between the lower longitudinal members 22, are secured between parallel vertical cross bars 70e and 70f which, in turn, are secured between the longitudinal members 22 on the two sides of the frame R. It will be understood that in many cases it is desirable that the legs of the patient be elevated, and this is provided for in the arrangement of Fig. 1. It will also be understood that while the mattress 121 and platform 120 are shown in a horizontal position in Fig. 1, a tilted position is readily obtained simply by arranging the cross bars 70c and 70d at different elevations on their vertical supporting bars 70e and 70f. It will also be understood that while I have illustrated the upper mattress supporting platform 90 as supported on cross-bars 70a and 70b, with the latter fitted between the two lower longitudinal rails 22, the bars 70a and 70b may, in case elevation of either end of the upper mattress should be desired, be supported by vertical cross bars in the same way as illustrated for the lower mattress in Fig. 1.

The purpose of the space allowed between the adjacent ends of the two mattress supporting platforms 90 and 120 is to enable convenient bedpan care of the patient. A readily removable closure platform 170 is provided for bridging across this space, being provided with projecting flanges 171 adapted to be supported by flanges 95a and 120a projecting from platforms 90 and 120, the two platforms being spaced apart a distance proper to accommodate this closure platform. In many cases, especially those not of a body-cast type, it is highly desirable that the patient be provided with continuous support and suitable padding or cushions (not shown), or an additional mattress of the type of 91 and 121, supported by this intermediate platform 170 fulfills this need.

Figs. 5, 6 and 7 illustrate a typical use of the apparatus. The patient P is shown as encased within a body cast 130. The head, shoulders and upper back of the patient and the upper portion of the body cast are supported by upper mattress 91, while the lower portion of the cast is illustrated as supported by a pair of horizontal cross bars 70g and 70h which engage the cast above and below the knee, and are themselves supported by a pair of vertical bars 70i connected between the upper and lower longitudinal members 22 on each side of frame R (see Fig. 5a). The foot of the cast is indicated as held down by another horizontal cross bar 70j connected between vertical cross bars 70k.

Fig. 5 also illustrates the case of a patient having a leg fracture, requiring the application of one type of traction apparatus. Thus, the left leg of the patient is shown in an elevated position, and covered from foot to just below the knee by an adhesive skin-traction device 138, the knee being raised and the leg passing over a horizontal cross bar at 70t, which acts as a counter support for the traction apparatus, bar 70t being supported between a pair of vertical cross bars 70m connected between members 22, as will be understood. The cross bar at 70t supports the leg against a spring tension or traction apparatus, indicated at 139, and which is connected between a stirrup 140 secured to adhesive traction-strapping 138 and some convenient point on the rotatable frame R. Thus, a tension apparatus in the form of a spring balance 141 is shown as connected at one end to stirrup 140 and at the other to a tension-adjusting turn buckle 142, the other end of which is connected by means of cable 143 to a horizontal cross bar 70n supported between the aforementioned vertical cross bars 70k.

Figs. 5, 6 and 7 show the arrangements made when it is desired to turn the patient over without interfering with the alinement of his body within the rotatable frame R. A pair of vertical cross bars 70u are mounted between the upper and lower longitudinal members 22 on each side of frame R at a convenient location along the upper portion of the body of the patient. A pair of horizontal cross bars 70p are fitted between these vertical cross bars 70u, and clamped thereto in an inverted position, as by means of clamp devices 100, is a mattress supporting frame 90a to which is secured a mattress 91a, frame 90a and mattress 91a being exactly similar to the previously described upper mattress supporting frame 90 and mattress 91. The mattress supporting frame 90a passes beneath cross members 70p, with mattress 91a below it and in contact with the upper portion of the body of the patient, the arrangement being such that when frame R is subsequently turned over, the weight of the upper portion of the patient will be transferred to mattress 91a without substantial disturbance of the position of the patient with relation to frame R. Thus it will be understood that horizontal cross bars 70p are so positioned on vertical cross bars 70u that mattress 91a is in firm, though not uncomfortable, contact with the patient.

To support the sides of the patient during inversion, the following provisions are made. A vertical side board or panel 150 is placed alongside the body of the patient on each side and is clamped to vertical cross bars 70u, a suitable and preferred construction being illustrated in Fig. 16. Panel 150, which is preferably fabricated of sheet metal, has projecting therefrom spring clips 151 adapted to be clamped to vertical cross bars 70u. According to the construction illustrated, each clip 151 comprises a pair of spring arms 152 having curved portions 153 adapted for engagement with opposite sides of a vertical cross bar. The panels 150 are mounted on the apparatus simply by engaging these clips 151 with the vertical cross bars 70u. Before turning the patient, the sides of the patient are suitably blocked with cushions placed against these panels 150, in the general arrangement indicated at 156 in Fig. 6.

To turn the patient over, the clamp devices 50 at the two ends of the stationary cradle are released, thereby freeing the end rings 20 and 21 of frame R for free rolling action on supporting rollers 35. Frame R may then be rolled either partly or completely over as may be desired, Fig. 7 illustrating the frame to have been completely inverted, so that the patient is then resting on the mattress 91a. Clamp devices 50 are of course re-applied when frame R has been rotated to the desired position.

While the patient is in the inverted position of Fig. 7, the mattress 90 may of course be removed, either for the purpose of resting the patient, or so that the back of the patient may be given any necessary attention. It will be evident that this inversion of the patient is accomplished

without the slightest difficulty or discomfort to the patient, and, assuming the patient to be properly supported or immobilized within the rotatable frame R, without the necessary alinement of any applied traction apparatus being lost.

The frame is made up of members which may be packed away in a minimum of space when not in use, and is capable of complete assembly and disassembly in a minimum of time. The frame is so designed that in the case of a severely injured fracture patient, a portion of the frame may first be assembled as a litter on which the patient may be transported to and about the hospital prior to being taken to his hospital room. Thus, for this purpose, the two lower longitudinal rails **22**, the cross bars **70***a*, **70***b*, **70***c*, and **70***d*, and the mattress platforms **90**, **120** and **170**, with their associated mattresses, may first be assembled together and employed as a litter. Subsequently, without ever removing the patient, the litter is converted into the complete fracture frame by addition of end rings **20** and **21**, upper longitudinal rails **22**, the necessary cross bars, employed in any necessary arrangement, and the frame R thus provided is then placed on the rollers **35** of the stationary sub-frame or cradle. The litter made up basically of the two lower longitudinal rails **22** and mattress supporting cross bars is also capable of variation for special types of patients. In extreme cases, the entire frame R, which is made up principally of light tubular members, and is therefore not unduly cumbersome, may be employed as a litter. Or, as a variation, certain temporary structure may be erected on the lower longitudinal rails **22**. Thus, in case it should be desired to suspend an injured member from above during transportation on the litter, a suitable overhead support may be erected on lower rails **22** out of the cross bars, which may, at the top, be clamped to a single longitudinal rail, thus forming a temporary triangular structure, from the upper longitudinal member of which the injured member may be suspended.

The many types of cases to which the frame of the present invention may be adapted involve the use of numerous varieties of traction and extension devices which may be clamped to the frame and its cross bars in various ways, as well as supporting of the patient in various ways within the frame R depending upon the pecularities of his injuries. The accompanying drawings, and especially Fig. 5, show how the standard length cross bars may be built into the frame in any desired fashion to accommodate any type of fracture patient. The cross bars may be clamped between any two of the longitudinal rails **22**, or between parallel cross bars clamped between rails **22**, or for special purposes, may be clamped at one end to one of the rails or cross bars and extended therefrom outwardly of the frame, as may be required for the support of traction or extension apparatus, or of any other equipment. Fig. 17 shows a cross bar **70***x* thus clamped at one end to one of the upper rails **22** and extending outwardly and downwardly therefrom, its lower clamp gripping a second cross bar **70***y*, and the aforementioned panel **150**, which was shown as employed for side support of the patient in Figs. 5, 6 and 7, is shown as clipped to bar **70***y* and to lower longitudinal rail **22** to provide an arm rest for the patient. There are a number of different standard types of traction equipment and methods of support for different types of injuries, all of which may be duplicated with the standard cross-bars of the present frame, which may be interbuilt into the apparatus in any way appropriate to the case in hand. The nature and location of the various types of traction and extension devices and the precise manner of support of the patient or his cast within or on the frame R is, however, a matter depending upon the ingenuity of the surgeon and the requirements of the individual ease, and no attempt is therefore made to detail all possible uses of the invention. And it will be understood that the present disclosure of a typical embodiment of the invention is merely for illustrative purposes, various changes in design, structure and arrangement being possible without departing from the spirit and scope of the invention or of the appended claims.

I claim:

1. In a device of the character described, the combination of a rotatable frame comprising spaced end rings and four parallel, equally spaced longitudinal rails connecting said end rings, said rails consisting of two normally horizontally alined bottom rails and two normally horizontally alined top rails, parallel horizontal bars connected at opposite ends to said two bottom rails, a mattress-supporting platform secured to said parallel cross bars, a mattress supported on the upper side of said platform, parallel vertical cross bars spaced from one another longitudinally of said longitudinal rails and connected to the top and bottom rails on each side of said rotatable frame, parallel horizontal cross bars detachably connected at opposite ends to said vertical cross bars at a level above said mattress, a mattress-supporting platform disposed beneath and detachably secured to said last mentioned horizontal cross bars, a mattress secured to the underside of said last mentioned platform, said two mattresses being spaced apart vertically to provide a space for a patient therebetween, and a cradle in which said frame is rotatable on a longitudinal axis substantially defined by the centers of said end rings.

2. In a device of the character described, the combination of a rotatable frame comprising spaced end rings and four parallel, equally spaced longitudinal rails connecting said end rings, said rails consisting of two normally horizontally alined bottom rails and two normally horizontally alined top rails, parallel horizontal bars connected at opposite ends to said two bottom rails, a mattress-supporting platform secured to said parallel cross bars, a mattress supported on the upper side of said platform, parallel vertical cross bars spaced from one another longitudinally of said longitudinal rails and connected to the top and bottom rails on each side of said rotatable frame, parallel horizontal cross bars detachably connected at opposite ends to said vertical cross bars at a level above said mattress, a mattress supporting platform disposed beneath and detachably secured to said last mentioned horizontal cross bars, a mattress secured to the underside of said last mentioned platform, said two mattresses being spaced apart vertically to provide a space for a patient therebetween, side panels positioned inside and detachably secured to said vertical cross bars, and a cradle in which said frame is rotatable on a longitudinal axis substantially defined by the centers of said end rings.

3. In a device of the character described, the combination of a rotatable frame comprising spaced end rings, a plurality of parallel longi-

tudinal rails extending between said end rings, clamp devices on said end rings slidably embracing said rails and adapted to be clamped thereto, a cradle in which said frame is rotatable on a longitudinal axis substantially defined by the centers of said end rings, and means supported by said longitudinal rails for substantially immobilizing a patient within said rotatable frame.

4. In a device of the character described, the combination of a frame comprising spaced end rings adapted to roll in a cradle frame, a plurality of parallel longitudinal rails extending between said end rings, rail supporting means on said end rings slidably embracing said rails, whereby said end rings may be moved toward or from one another on said rails to adjust the spacing distance between the end rings, means for securing said rails against longitudinal movement with reference to said end rings after adjustment of the spacing distance between the rings has been made, and means supported by said longitudinal rails for substantially immobilizing a patient within said rotatable frame.

5. In a device of the character described, the combination of a rotatable frame comprising spaced end rings and four parallel, longitudinal rails connecting said end rings, said rails consisting of two normally horizontally alined bottom rails and two normally horizontally alined top rails, parallel vertical cross bars spaced from one another longitudinally of the longitudinal rails connected at opposite ends to the top and bottom rails on each side of said rotatable frame, parallel horizontal cross bars detachably connected at opposite ends to said vertical cross bars, mattress-supporting means adapted to be mounted on said parallel horizontal cross bars, and cradle means in which said end rings of said frame are rotatable.

6. In a device of the character described, the combination of a rotatable frame comprising spaced end rings and four parallel, longitudinal rails connecting said end rings, said rails consisting of two normally horizontally alined bottom rails and two normally horizontally alined top rails, parallel vertical cross bars spaced from one another longitudinally of the longitudinal rails connected at opposite ends to the top and bottom rails on each side of said rotatable frame, parallel vertical cross bars connected top and bottom to the top and bottom rails on each side of the frame, and arranged in pairs each comprising individual members on opposite sides of the frame, and said pairs of vertical cross bars being spaced longitudinally of the longitudinal rails, and parallel, horizontal, patient-supporting cross bars detachably connectible at opposite ends to selected points along the lengths of said vertical bars between the upper and lower longitudinal rails on each side of the frame, and cradle means in which said end rings may be rotated.

STUART C. KNOX.