United States Patent

Mantell et al.

[15] **3,650,516**

[45] **Mar. 21, 1972**

[54] DEVICE FOR INTRODUCING ADDITIVES INTO MOLTEN METAL

[72] Inventors: **Detmar Franz Otto Mantell; Werner Harald Valentin Mainz,** both of Gelsenkirchen, Germany

[73] Assignee: **Rheinstahl Huettenwerke AG,** Essen, Germany

[22] Filed: **Mar. 25, 1970**

[21] Appl. No.: **22,650**

[52] **U.S. Cl.** ..... **266/34 T,** 75/93, 164/57, 164/266, 266/34 A

[51] **Int. Cl.** **C21c 7/00**

[58] **Field of Search** ..... 266/34 A, 34 T, 38; 64/56, 64/57, 266, 337; 75/53, 61, 93, 129, 130 A, 130 B, 130 C; 222/145; 239/433, 590

[56] **References Cited**

UNITED STATES PATENTS

1,151,332	8/1915	Baggaley	266/34 T
2,291,221	7/1942	Gibson	266/34 T
2,302,999	11/1942	O'Brien	266/34 T
2,997,384	8/1961	Feichtinger	75/93
2,997,386	8/1961	Feichtinger	75/93
3,137,753	6/1964	Feichtinger	75/34 T
3,356,489	12/1967	Feichtinger	75/93
3,357,692	12/1967	Bakkerus	266/34 A

Primary Examiner—Gerald A. Dost
Attorney—McGlew & Toren

[57] **ABSTRACT**

A device for introducing additives, such as solid substances of low boiling point, into a molten metal includes an intermediate ladle for receiving the molten metal and discharging it from an outlet opening in its base into an outlet pipe extending downwardly from the opening. A feed pipe for introducing additives extends downwardly through the ladle with its lower end located in the outlet opening from the ladle. The lower end of the feed pipe is spaced radially inwardly from the inner peripheral of the ladle outlet opening and provides an annular space which is divided by ribs, extending between the ladle and the lower end of the feed pipe, into a number of angularly spaced open sections or flow passages. The ribs extend downwardly for at least a portion of the length of the outlet pipe and the outlet pipe is arranged to provide, in serial arrangements proceeding from the outlet opening in the ladle, a converging section, a cylindrical section, and a diverging nozzle-like section.

18 Claims, 4 Drawing Figures

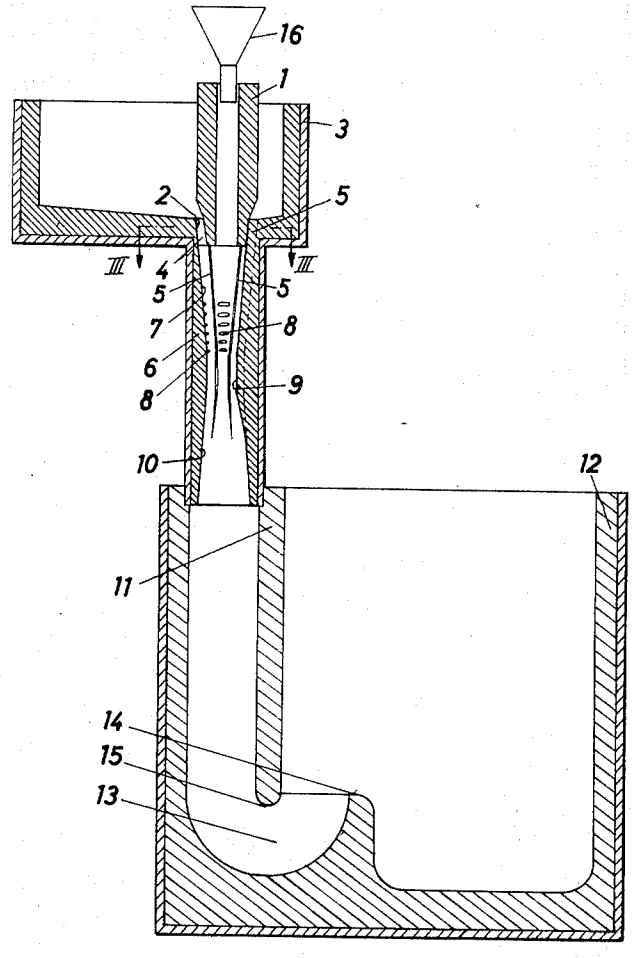

Patented March 21, 1972 3,650,516

2 Sheets-Sheet 1

Fig.1

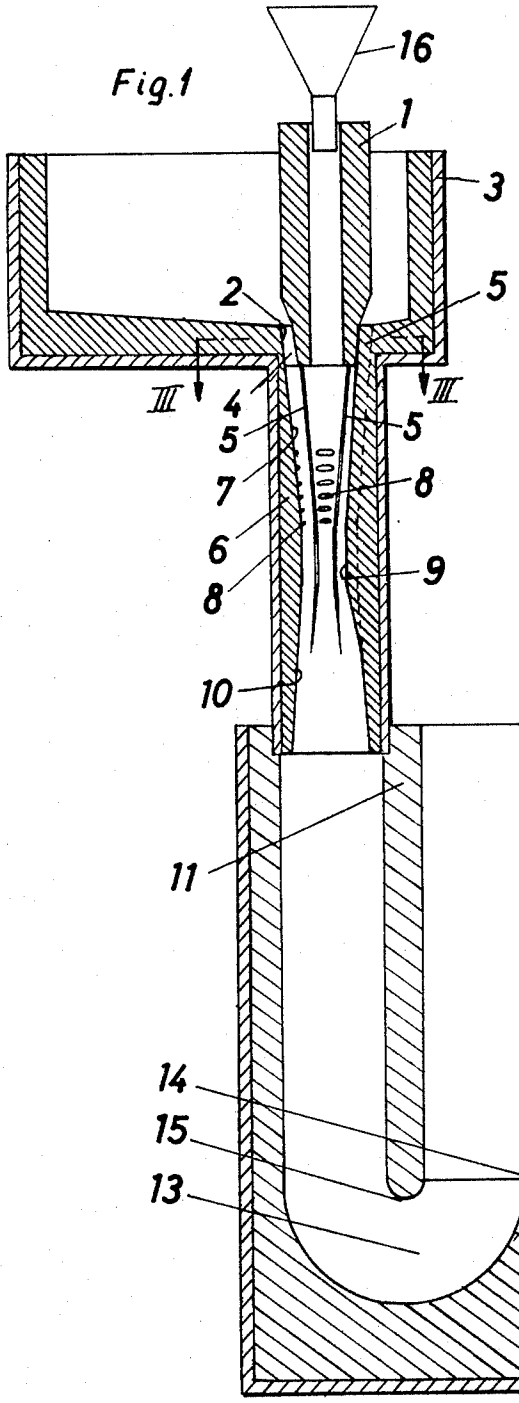

Fig 2

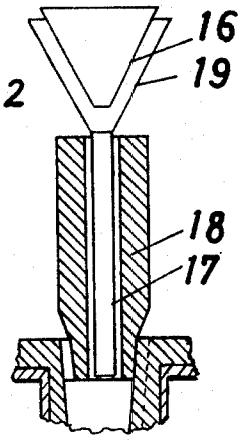

Fig. 3

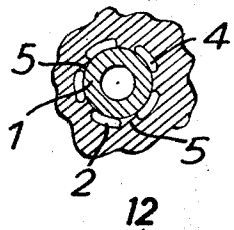

INVENTORS
DETMAR FRANZ OTTO MANTELL
WERNER HAROLD VALENTIN MAINZ
BY: McGlew and Toren
ATTORNEYS

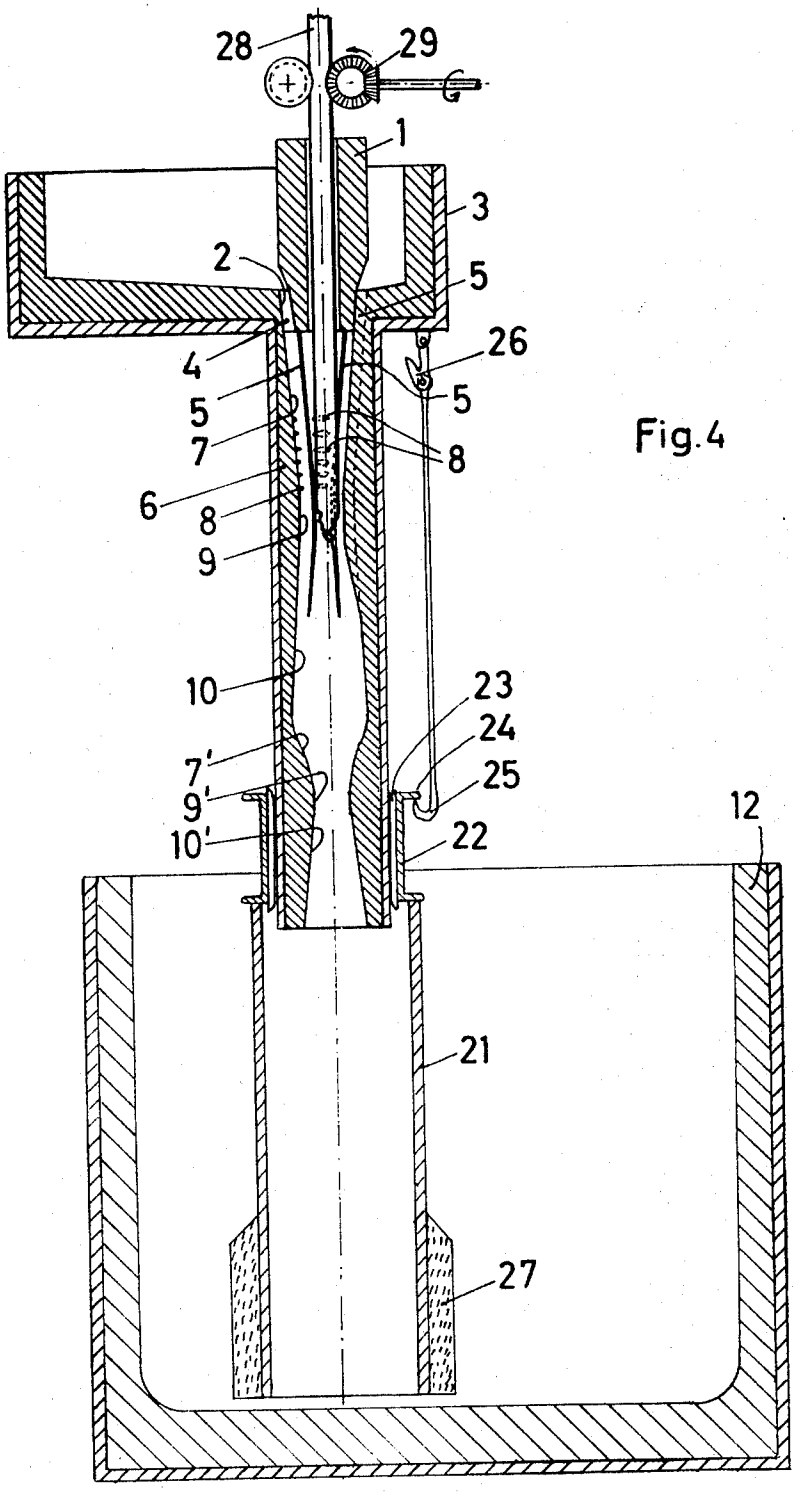

Fig. 4

INVENTORS
DETMAR FRANZ OTTO MANTELL
WERNER HAROLD VALENTIN MAINZ
BY: McGlew & Toren
ATTORNEYS

DEVICE FOR INTRODUCING ADDITIVES INTO MOLTEN METAL

SUMMARY OF THE INVENTION

The invention is directed to a device for introducing additives, in particular solid substances having low boiling points, into molten metal and especially into molten iron. More particularly, the invention concerns the outlet arrangement of a feed pipe and the outlet opening from an intermediate ladle for introducing the additives into the molten metal as it flows downwardly within an outlet pipe from the intermediate ladle.

The introduction of magnesium or other additives into molten iron for the production of cast iron of a particular grade, such as cast iron with spherical graphite, has been the object of numerous studies to find a satisfactory solution to the problem of introducing the additives. However, until the conception of the present invention it has not been possible to find a satisfactory method of introducing the additives into the molten iron in a safe manner. Where magnesium has been used as the additive it has been introduced in pure form as well as in the form of magnesium alloys of different compositions, usually in a lumpy or fine grained condition or in the form of immersion bodies, the treatment involving the introduction of the additive often occurring by a filling or immersion method. Furthermore, on occasion the magnesium has been introduced in gaseous form by using auxiliary gases or in a form of coke impregnated with magnesium and using the immersion method of introduction.

These various methods used in the past have a number of shortcomings. In particular the magnesium yield and the precision of the magnesium treatments usually have been unsatisfactory, the temperature losses during the treatment have often been too high, the duration of the treatment has been undesirably long, and the introduction of the additive frequently has required complicated manipulations.

In the German Auslegeschrift 1,278,457 an apparatus is disclosed in which the molten iron flows through a closed channel, into which magnesium in the form of wire or of tubes is fed through lateral apertures in such a way that the magnesium is melted by the molten iron. For an effective treatment using this apparatus the cross section of the channel is determined in accordance with certain mathematical formula. In another embodiment of this construction, alloying agents in granular form are fed through a lateral aperture in a closed pipe through which the molten iron flows. In the course of numerous experiments it has been found, especially in a rapid treatment cycle, that there is no time for thorough cleaning of the closed reaction pipe between two treatment cycles with the result that obstructions develop because of the sintering of the alloy in the feed pipe and also due to build up in the reaction pipe and as a consequence the treatments must be interrupted and a certain amount of waste is produced.

In German Pat. No. 1,433,594 a device is set forth in which a feed pipe for the additives passes coaxially through the outflow channel in the bottom of a storage chamber for the molten metal. The outflow channel tapers uniformly to its mouth and the lower edge of the feed pipe projects below the mouth of the outflow channel. It is stated that in this arrangement, under the action of the surface tension of the metal, in particular where cast iron is used, a closed hollow jet is developed which absorbs the vapor pressure of the magnesium added through the feed pipe without any breaks taking place in its surface. It is indicated that the reaction of the magnesium with the iron occurs in the interior of the hollow jet and is completed before the freely falling laminar jet impinges on the surface of the material contained in the basin below the outflow channel. In this arrangement it is pointed out that an essential feature is the location of the lower edge of the feed pipe projecting from the mouth of the outflow channel as, without this arrangement, obstructions of the feed pipe will develop and explosions may take place within the device when magnesium is added. Experiments conducted on the device disclosed in the above German patent have shown that the surface tension of the molten cast iron is not sufficiently reliable to avoid any breaks in the surface of the hollow jet. Further, small slag particles, which inevitably are entrained in the molten metal, reduce the surface tension to such an extent that the jet surface breaks, the magnesium escapes as a vapor, and the magnesium treatment is not successful. Slag intercepting devices have not provided a reliable solution and have resulted in additional disadvantages in that residual iron collects in an inflow box and must be drained by complicated manipulations.

Therefore, it is the primary object of the present invention to avoid the problems experienced in the past and to provide a device for the introduction of additives in an absolutely reliable manner so that the device does not require any servicing for the elimination of disturbances even during shutdowns and the production of waste or operational disturbances are avoided when the additive treatments take place in rapid succession. In accordance with the present invention, the points of introduction of the additive into the molten metal take place at an outflow opening from an intermediate supply member in which angularly spaced open sections are provided between the outlet opening from the supply vessel and the outer surface of the additive feed pipe by means of ribs which extend in the radial direction between the feed pipe and the outlet opening and an outlet pipe is arranged below the outlet opening to receive the molten metal and additives with the ribs extending downwardly into the pipe from the outlet opening.

By dividing the outlet opening from the supply vessel into a plurality of open sections, flow apertures are provided for the molten metal as it enters into the outlet pipe. In this arrangement the additives introduced through the feed pipe and the individual metal jets flowing through the open sections fall, at first, independently of each other to the bottom. In this manner any splashing, which might take place, is shifted downwardly from the critical point, that is the inlet mouth to the outlet pipe, and splashing which would obstruct the outlet from the feed pipe is prevented. Furthermore, the possibility of any blockage in the feed pipe caused by sintering is reliably avoided. Furthermore, in this arrangement it is completely immaterial whether the surface tension of the molten metal is temporarily reduced by entrained slag. The arrangement of the downwardly extending outlet pipe directs the molten metal in such a manner that a turbulent flow results with intimate mixture with the additives so that the desired reaction between the molten metal and the additive is effected. Furthermore, the additive is distributed in a completely uniform manner throughout the molten metal. In this arrangement the access of air is prevented and for easily oxidizing additives, such as aluminum, a high yield is achieved. In addition, when magnesium is added, evaporation losses are kept to a minimum. Additional characteristics of the present invention, which enhance its effectiveness include the downward extension of the ribs which subdivide the annular space between the feed pipe and the supply vessel outlet opening so that the molten metal is conducted downwardly in a positive fashion and turbulent flow is assured. To produce the desired flow characteristics the portion of the outlet pipe extending downwardly from the outlet opening in the supply vessel converges inwardly for a portion of its length. The combination of the downwardly extending ribs and the converging walls of the outlet pipe promote the intimate mixing of the metal and the additives. In the event any magnesium vapors form, a sufficient volume is available so that they can rise without causing any back pressure on the molten metal. Additionally, the inner surface of the outlet pipe can be provided with elevations or depressions extending normally to its axis, and preferably such means are arranged in the converging zone of the outlet pipe. Another feature of the outlet pipe is the provision of a diverging nozzle-like section located below the converging zone with the possible arrangement of a short cylindrical section between the two tapering zones. It has been found that it is advisable, especially in treatments utilizing magnesium, to pro-

vide the outlet pipe with multiple nozzle-like sections with their minimum cross sections decreasing from the top to bottom of the pipe.

Due to the design of the molten metal flow openings from the supply vessel and the arrangement of the outlet pipe, the additives react completely with the molten metal without any disturbance and, in addition, the length of the outlet pipe can be kept relatively short. Therefore, the device has the additional advantage of a short structural height.

To prevent air from gaining access into the outlet pipe from its lower end, the bottom of the outlet pipe can be terminated immediately above the bottom of a vessel or ladle into which the mixture of the molten metal and additive is being delivered so that the lower end of the outlet pipe is closed immediately after the commencement of the flow of the molten metal downwardly into the lower ladle or vessel. For this purpose, a bottom recess may be formed in the lower vessel.

In another preferred form of the invention, a telescoping refractory tube is provided on the lower end of the outlet pipe and the tube is guided for axial displacement along the outer surface of the outlet pipe with its upward movement aided by means of a refractory float located on the lower exterior end of the tube.

In another embodiment of the invention, the outlet pipe can be closed at its lower end by providing a siphon type structure between the lower end of the outlet pipe and the vessel into which it delivers the molten metal and additive. A particular appropriate design of such an embodiment includes a tubular section formed in the wall of the vessel receiving the molten metal from the outlet pipe with the tubular section extending downwardly from the lower end of the outlet pipe into a basin which surrounds its lower end. The molten metal flowing downwardly through the tubular section flows from the basin into the lower vessel and the upper edge of the basin is located at a higher level than the lower end of the tubular section. Especially when magnesium is being introduced, magnesium vapor may sometimes collect in the siphon type part of the lower vessel. However, as a rule a sufficient volume is available because of the sufficiently large cross section of the tubular part of the siphon portion.

Granular or pulverized additives are usually introduced by means of a proportioning funnel positioned at the upper end of the feed pipe. At its lower end, vapors from the additives can get into the feed pipe and should this occur to a disturbing extent, it is recommended to form the feed pipe as a pair of concentrically arranged pipes, so that the proportioning funnel delivers the additive into the inner pipe while any vapors can escape through the annular space formed between the inner and outer pipes. Additionally, in such an arrangement an additional funnel can be disposed concentrically about the proportioning funnel with the second funnel being connected directly to the upper end of the inner pipe.

The various features of novelty which characterize the invention are pointed out with particularity in the claims annexed to and forming a part of this specification. For a better understanding of the invention, its operating advantages and specific objects attained by its uses, reference should be had to the accompanying drawings and descriptive matter in which there are illustrated preferred embodiments of the invention.

DESCRIPTION OF THE DRAWINGS

In the drawings:

FIG. 1 is a vertical sectional view of a device, in accordance with the present invention, for introducing additives, particularly of granular or pulverized substances, into a molten metal flowing from an intermediate supply vessel;

FIG. 2 is a sectional view of another embodiment of a feed pipe as shown in FIG. 1;

FIG. 3 is a transverse sectional view taken along line III—III in FIG. 1; and

FIG. 4 is a vertical sectional view of another embodiment of the device, in accordance with the present invention, in which the additive is introduced in rod form.

DETAILED DESCRIPTION OF THE INVENTION

In FIG. 1 a device is illustrated which is intended, in particular, for the introduction of granular or pulverized substances, especially substances of low boiling point, into molten iron and consists of a vertically arranged feed pipe 1 for introducing the additives into the molten metal. The feed pipe extends downwardly into an outlet opening 2 of an intermediate supply vessel or ladle which contains the molten metal. The lower end of the feed pipe 1 terminates at the mouth of the outlet opening 2 and the outer surface of the lower end of the feed pipe is spaced inwardly from the juxtaposed surface of the vessel 3 forming the outlet opening 2. A plurality of annularly spaced open sections 4 are provided in the outlet opening 2 from the vessel 3 by a plurality of ribs 5 which extend radially between the outer wall of the lower end of the feed pipe 1 and the surface forming the outlet opening from the vessel 3. In FIG. 3 the arrangements of the angularly spaced open sections 4 is indicated for discharging the molten metal from the vessel or ladle 3.

Positioned at and extending downwardly from the outlet opening 2 from the vessel 3 is an outlet pipe 6 which conducts the molten metal from the vessel and the additives from the feed pipe 1 in the downward direction. An inwardly converging zone 7 is provided in the outlet pipe 6 from its connection to the outlet opening 2 downwardly for a part of the length of the pipe. As can be noted in FIG. 1, the ribs 5 extend downwardly from the lower end of the feed pipe 1 through the outlet pipe 6 for a part of its length with the ribs extending at least beyond the inwardly converging zone 7 of the pipe. Between the vertically extending ribs 5, projections or protuberances are formed on the inner surface of the outlet pipe 6 extending normal to the axis of the pipe. The projections or protuberances 8 are located in the inwardly converging zone 7 of the outlet pipe.

Immediately below the converging zone 7 of the outlet pipe 6 a short cylindrical section 9 is provided which is followed by a diverging zone 10 widening in the downward direction in a nozzle-like form. As indicated in FIG. 1 the lower ends of the ribs 5 terminate intermediate the ends of the diverging zone 10 of the pipe. The outlet pipe 6 conveys the molten metal and additives downwardly and delivers them into the upper end of another vessel or ladle 12. Formed as a part of one wall of the ladle 12 is a siphon type component 11 which forms a tubular passageway into the lower portion of the ladle 12. At its upper end, the siphon type component 11 receives the lower end of the outlet pipe 6 for conveying the mixture of molten metal and additives downwardly into a basin 13 formed in the bottom of the ladle 12 with the center of the basin being offset from the tubular passageway through the siphon type component 11. The lower end 15 of the tubular passageway through the siphon type component 11 terminates at a level below the upper edge of the basin 13 so that the material is discharged from the tubular passageway into the basin at a level below the edge of the basin over which the material flows into the main portion of the ladle 12.

In FIG. 1 a funnel 16 is positioned extending into the upper end of the feed pipe 1 for introducing the additives into the feed pipe.

In FIG. 2 an alternate arrangement is shown for the feed pipe 1 in which coaxially arranged pipes are provided with an inner pipe 17 being positioned within a concentrically arranged outer pipe 18. At the upper end of the feed pipe arrangement the proportioning funnel 16 is spaced upwardly from the upper end of the inner pipe 17 and a concentrically arranged funnel 19 encircles the proportioning funnel and is connected at its lower end to the upper end of the inner pipe 17. The additives introduced through the funnel 16 pass downwardly through the inner pipe 17 into the outlet pipe 6.

As an alternative to the arrangement shown in FIG. 3 a single refractory unit can be constructed to form the open sections 4 which provide the outlet apertures from the intermediate vessel 3. The single refractory unit also incorporates the upper ends of the ribs 5 and the lower end of the feed pipe 1 in the zone of the outlet opening from the vessel 3.

The device described above has been used in treating a large number of charges of molten metal with magnesium and no disturbances whatever have been encountered. The charges of molten metal were quiet during the treatment and no smoke was developed.

The following are three examples of the results obtained using the above-identified device.

The quantity of iron was 1,500 to 1,520 kg. The iron contained 3.8 to 3.9 percent C, < 0.20% Mn, < 0.09% P. The flow time (treatment time) was between 133 and 142 sec. To each charge of iron 20 kg. of a granular magnesium alloy containing 5 percent Mg (grain size 1 to 4 mm.) were added. The results are compiled in the following table. Obviously the magnesium yield is very high and the temperature losses are satisfactorily low.

	Before treatment		After treatment			Temp. before treatment (° C.)	Temp. after treatment (° C.)	Yield of Mg in percent
	Si (percent)	S (10^{-3} percent)	Si	S (10^{-3} percent)	Mg (10^{-3} percent)			
Number:								
1	2.28	8	2.85	7	44	1,490	1,418	67.6
2	2.21	15	2.75	14	42	1,490	1,430	63.8
3	2.34	5	2.87	8	45	1,494	1,425	68.4

In FIG. 4 an alternate arrangement of the present invention is disclosed in which the additive substance is introduced in the form of a rod material **28** and is conveyed downwardly through the feed pipe **1** by means of a feed device **29**. The outside diameter of the rod material is less than the inside diameter of the feed pipe so that any vapors which evolve can escape in the annular gap between the rod material and the inside of the pipe. The arrangement of the feed pipe **1** and the outlet opening **2** from the vessel **3** with the ribs **5** is similar to that shown in FIG. **1** and the same reference numerals are employed. Further, the outlet pipe **6** extends downwardly from the outlet opening **2** in the vessel **3** for conveying the mixture of the rod material and the molten metal downwardly into the vessel or ladle **12**. At the lower end of the outlet pipe **6** a refractory-lined steel pipe **21** extends downwardly into the ladle **12** for conveying the mixture from the outlet pipe **6** into the ladle. The upper end of the pipe **21** is guided about the exterior of the outlet pipe **6** so that it can be displaced axially upwardly from the position shown in FIG. **4** in a telescopic manner passing over the outer surface of the outlet pipe. The guide sleeve which directs the telescopic movement of the pipe **21** over the outlet pipe consists of a cylindrical sleeve **22** secured to the upper end of the pipe **21** and having a diameter slightly greater than the outside diameter of the outlet pipe **6**. Guide rails **23** are spaced about the outlet pipe **6** within the sleeve **22** for effecting the axial sliding movement of the pipe over the outlet pipe. The guide rails **23** are angularly spaced apart forming passageways between the sleeve **22** and the outer surface of the outlet pipe **6** for permitting discharge of vapors. At the upper end of the sleeve **22**, an annular shaped plate **24** extends radially outwardly forming a support for the combination of the sleeve **22** and the pipe **21**. A lower hook **25** and an upper hook **26** extend downwardly from the lower surface of the vessel **3** and provide means for engaging the surface of the plate **24** for holding the pipe **21** at the lower and upper limits of its telescopic travel over the outlet pipe **6**. In other words, when the pipe is at its lowest position within the ladle **12** the plate **24** is supported on the hook **25**, as is indicated in FIG. **4**. When the pipe **21** moves upwardly over the outlet pipe **6** it is supported in its upper position by the plate **24** resting on the hook **26**. At the lower end of the pipe **21** about its exterior surface a float **27** of a refractory material is provided, the refractory material being selected for its buoyancy so that as the end of the pipe is immersed in the molten metal within the ladle **12** the float **27** causes the pipe **21** to move upwardly as the level of the molten material within the ladle **12** rises. The float will continue to lift the pipe upwardly until it reaches the maximum level of the molten metal within the ladle **12** at which time the plate **24** supports the sleeve **22** and pipe **21** on the upper hook **26**.

Another distinguishing characteristic of the arrangement in FIG. **4** as compared to that in FIG. **1** is the construction of the outlet pipe in which the converging zone **7**, its cylindrical section **9** and diverging zone **10** are repeated, at **7'**, **9'** and **10'**, so that a pair of nozzle-like sections are provided within the length of the outlet pipe. In the arrangement in FIG. **4** the cross section of the cylindrical portion **9'** in the lower nozzle is less than in the upper nozzle section.

Due to the various measures provided by the above device for extensive suppression of the evolution of vapors and for the removal of such vapors it is possible to insure that no back pressure can develop on the molten metal within the outlet pipe **6** even when substances of a very low boiling point are added, such as magnesium. With the construction of the device disclosed in FIG. **4** it has been determined that the magnesium yield is approximately 65 percent and the temperature losses during the treatment are low.

While specific embodiments of the invention have been shown and described in detail to illustrate the application of the inventive principles, it will be understood that the invention may be embodied otherwise without departing from such principles.

What is claimed is:

1. In a device for introducing additives, in particular solid substances of low boiling point, into a molten metal, comprising an intermediate vessel arranged to receive a supply of molten metal and having an outlet opening in its base for discharging molten metal therefrom, and a vertically positioned feed pipe for introducing additives into the molten metal, extending downwardly into the intermediate vessel, the improvement comprising said outlet opening having an inner peripheral surface; the lower end of said feed pipe extending through said outlet opening with the outer surface of said feed pipe in spaced relation to the inner peripheral surface of said outlet opening; means, including the outer surface of said feed pipe, the inner peripheral surface of said outlet opening, and angularly spaced axially elongated radial ribs, dividing the flow area through said outlet opening into a plurality of angularly spaced separated flow passages; and an outlet pipe extending downwardly from said outlet opening with its upper end in communication with said flow passages and with said feed pipe.

2. A device, as set forth in claim **1**, wherein said outlet pipe has its inner surface converging inwardly for a portion of its length from the outlet opening from said intermediate vessel.

3. A device, as set forth in claim **2**, wherein a plurality of protuberances are formed on the inner surface of said outlet pipe within the zone of its inwardly converging surfaces, said protuberances being positioned between said ribs in said outlet pipe and said protuberances extending normally to the axis of said outlet pipe.

4. A device, as set forth in claim **2**, wherein the inner surface of said outlet pipe forms a short cylindrical section extending downwardly from the lower end of said inwardly converging section of said pipe.

5. A device, as set forth in claim **4**, wherein the inner surface of said outlet pipe diverges outwardly from the lower end of said cylindrical section in a nozzle-like form.

6. A device, as set forth in claim **5**, wherein said outlet pipe has a second converging section extending downwardly from the lower end of said diverging section, a second cylindrical section extending downwardly from the lower end of said second converging section and a second diverging section extending downwardly from the lower end of said cylindrical section, and the cross sectional opening through said second cylindrical section being less than the cross sectional opening through said first cylindrical section of said outlet pipe.

7. A device, as set forth in claim **1**, wherein a proportioning

funnel is arranged at the upper end of said feed pipe for conveying additives into said feed pipe for flow downwardly therethrough into said outlet pipe.

8. A device for introducing additives, in particular solid substances of low boiling point, into a molten metal is comprised of an intermediate vessel arranged to receive a supply of molten metal, said intermediate vessel having an outlet opening in the base thereof for discharging molten metal therefrom, a vertically positioned feed pipe for introducing additives into the molten metal extending downwardly into said intermediate vessel, wherein the improvement comprises said feed pipe having its lower outlet end positioned within the outlet opening from said intermediate vessel and having its outer surface disposed in spaced relationship from the surface of the outlet opening forming an annular space therebetween, a plurality of angularly spaced ribs positioned within the annular space and extending between the outlet end of said feed pipe and the surface of the outlet opening in said intermediate vessel for dividing the annular space into a plurality of open sections, and an outlet pipe connected to and extending downwardly from the outlet opening in said intermediate vessel for conveying molten metal from said intermediate vessel and additives introduced through said feed pipe; said ribs extending downwardly from said outlet opening into said outlet pipe and extending through said outlet pipe for at least a portion of the length thereof.

9. A device for introducing additives, in particular solid substances of low boiling point, into a molten metal is comprised of an intermediate vessel arranged to receive a supply of molten metal, said intermediate vessel having an outlet opening in the base thereof for discharging molten metal therefrom, a vertically positioned feed pipe for introducing additives into the molten metal extending downwardly into said intermediate vessel, wherein the improvement comprises said feed pipe having its lower outlet end positioned within the outlet opening from said intermediate vessel and having its outer surface disposed in spaced relationship from the surface of the outlet opening forming an annular space therebetween, a plurality of angularly spaced ribs positioned within the annular space and extending between the outlet end of said feed pipe and the surface of the outlet opening in said intermediate vessel for dividing the annular space into a plurality of open sections, and an outlet pipe connected to and extending downwardly from the outlet opening in said intermediate vessel for conveying molten metal from said intermediate vessel and additives introduced through said feed pipe; said ribs extending downwardly from said outlet opening into said outlet pipe and extending through said outlet pipe for at least a portion of the length thereof; said outlet pipe having its inner surface converging inwardly for a portion of its length from the outlet opening from said intermediate vessel; the inner surface of said outlet pipe forming a short cylindrical section extending downwardly from the lower end of said inwardly converging section of said pipe, and diverging outwardly from the lower end of said cylindrical section in a nozzle-like form; said ribs extending downwardly from the outlet opening in said intermediate vessel through the converging section and cylindrical section of said outlet pipe into the diverging section of said outlet pipe, and said ribs terminating at a point spaced from the outlet end of said diverging section.

10. A device for introducing additives, in particular solid substances of low boiling point, into a molten metal is comprised of an intermediate vessel arranged to receive a supply of molten metal, said intermediate vessel having an outlet opening in the base thereof for discharging molten metal therefrom, a vertically positioned feed pipe for introducing additives into the molten metal extending downwardly into said intermediate vessel, wherein the improvement comprises said feed pipe having its lower outlet end positioned within the outlet opening from said intermediate vessel and having its outer surface disposed in spaced relationship from the surface of the outlet opening forming an annular space therebetween, a plurality of angularly spaced ribs positioned within the annular space and extending between the outlet end of said feed pipe and the surface of the outlet opening in said intermediate vessel for dividing the annular space into a plurality of open sections, and an outlet pipe connected to and extending downwardly from the outlet opening in said intermediate vessel for conveying molten metal from said intermediate vessel and additives introduced through said feed pipe; a telescopically arranged refractory lined pipe positioned about said outlet pipe and arranged to extend downwardly from the lower end of said outlet pipe enclosing the flow of materials from said outlet pipe into a vessel, and means for displacing said pipe in telescopic fashion over the exterior surface of said outlet pipe.

11. A device, as set forth in claim **10**, wherein a guide sleeve is secured to and extends axially upwardly from the upper end of said refractory lined pipe, said guide sleeve having an inside diameter slightly larger than the outside diameter of said outlet pipe, vertically extending guide rails secured to the interior surface of said sleeve and contacting the outer surface of said outlet pipe for guiding said refractory lined pipe upwardly over said outlet pipe, a refractory float formed about the exterior surface of the lower end of said refractory lined pipe and the refractory material of said float having a buoyancy for lifting said refractory lined pipe as the level of molten metal rises within a vessel within which said refractory lined pipe is positioned.

12. A device, as set forth in claim **11**, wherein an annular plate is secured to and extends outwardly from the upper end of said guide sleeve, a lower hook secured to and extending downwardly from said intermediate vessel to a point spaced above the outlet end of said outlet pipe, an upper hook secured to the lower surface of said intermediate vessel and positioned adjacent the lower surface of said intermediate vessel, said lower hook and said upper hook arranged to engage said annular plate for supporting said refractory lined pipe at the lower limit and the upper limit of its travel relative to said outlet pipe.

13. A device for introducing additives, in particular solid substances of low boiling point, into a molten metal is comprised of an intermediate vessel arranged to receive a supply of molten metal, said intermediate vessel having an outlet opening in the base thereof for discharging molten metal therefrom, a vertically positioned feed pipe for introducing additives into the molten metal extending downwardly into said intermediate vessel, wherein the improvement comprises said feed pipe having its lower outlet end positioned within the outlet opening from said intermediate vessel and having its outer surface disposed in spaced relationship from the surface of the outlet opening forming an annular space therebetween, a plurality of angularly spaced ribs positioned within the annular space and extending between the outlet end of said feed pipe and the surface of the outlet opening in said intermediate vessel for dividing the annular space into a plurality of open sections, and an outlet pipe connected to and extending downwardly from the outlet opening in said intermediate vessel for conveying molten metal from said intermediate vessel and additives introduced through said feed pipe; a second vessel located below and arranged to receive molten material and additives from the lower end of said outlet pipe, and a siphon-type component formed in said second vessel and having a tubular passage in alignment with said outlet pipe for receiving the mixture of molten metal and additives from said outlet pipe and for introducing the mixture of molten metal and additives into the base of said second vessel with the outlet from said siphon-type component being located at a level above the bottom of said second vessel.

14. A device, as set forth in claim **13**, wherein said siphon-type component comprises a tubular section formed in the wall of said second vessel and secured at its upper end to the lower outlet end of said outlet pipe and extending downwardly to a point spaced upwardly from the base of said second vessel, a basin formed in the lower end of said second vessel aligned below said tubular section for receiving the mixture of molten material and additives therefrom, said basin having an upper edge over which the mixture of molten material and additives flows from said basin into the remainder of said second vessel and the upper edge of said basin being disposed up-

wardly above the lower edge of said tubular section so that the lower end of said tubular section is closed from access to air when said basin is filled with the mixture of molten materials and additives.

15. A device for introducing additives, in particular solid substances of low boiling point, into a molten metal is comprised of an intermediate vessel arranged to receive a supply of molten metal, said intermediate vessel having an outlet opening in the base thereof for discharging molten metal therefrom, a vertically positioned feed pipe for introducing additives into the molten metal extending downwardly into said intermediate vessel, wherein the improvement comprises said feed pipe having its lower outlet end positioned within the outlet opening from said intermediate vessel and having its outer surface disposed in spaced relationship from the surface of the outlet opening forming an annular space therebetween, a plurality of angularly spaced ribs positioned within the annular space and extending between the outlet end of said feed pipe and the surface of the outlet opening in said intermediate vessel for dividing the annular space into a plurality of open sections, and an outlet pipe connected to and extending downwardly from the outlet opening in said intermediate vessel for conveying molten metal from said intermediate vessel and additives introduced through said feed pipe; said feed pipe comprising an inner pipe and a concentrically arranged outer pipe spaced outwardly from the outer surface of said inner pipe providing an annular space therebetween, said inner pipe and said outer pipe extending downwardly to the outlet opening from said intermediate vessel.

16. A device, as set forth in claim 15, wherein a proportioning funnel spaced above the inlet opening to said inner pipe for supplying additive substances thereto, a concentrically arranged outer funnel extending about said proportioning funnel and secured at its lower end to the upper end of said inner pipe whereby vapors formed within said outlet pipe can pass upwardly in the annular space between said inner pipe and said outer pipe flowing outwardly from the upper end of the annular space about said outer funnel so that the vapors cannot pass downwardly into the inner pipe with said additive substances.

17. A device for introducing additives, in particular solid substances of low boiling point, into a molten metal is comprised of an intermediate vessel arranged to receive a supply of molten metal, said intermediate vessel having an outlet opening in the base thereof for discharging molten metal therefrom, a vertically positioned feed pipe for introducing additives into the molten metal extending downwardly into said intermediate vessel, wherein the improvement comprises said feed pipe having its lower outlet end positioned within the outlet opening from said intermediate vessel and having its outer surface disposed in spaced relationship from the surface of the outlet opening forming an annular space therebetween, a plurality of angularly spaced ribs positioned within the annular space and extending between the outlet end of said feed pipe and the surface of the outlet opening in said intermediate vessel for dividing the annular space into a plurality of open sections, and an outlet pipe connected to and extending downwardly from the outlet opening in said intermediate vessel for conveying molten metal from said intermediate vessel and additives introduced through said feed pipe; a proportioning funnel extending downwardly into the upper end of said feed pipe for supplying additive substances thereto, said ribs extending downwardly from the outlet opening from said intermediate vessel into said outlet pipe for at least a portion of the length thereof, said outlet pipe having a converging section extending downwardly from the outlet opening from said intermediate vessel for a portion of its length, said outlet pipe having a cylindrical section extending downwardly from the lower end of said converging section and said outlet pipe having a diverging section extending downwardly from the lower end of said cylindrical section to the outlet opening from said outlet pipe, a second vessel being located at the outlet end of said outlet pipe and arranged to receive the mixture of molten metal and additives from said outlet pipe, said second vessel comprising a siphon-type component arranged to receive the mixture of molten metal and additives from said outlet pipe for conveying the mixture into the lower end of said vessel, said siphon-type component comprising a tubular section formed in the wall of said second vessel and extending downwardly to a level above the bottom of said second vessel, a basin arranged below said tubular section for receiving the mixture from said tubular section and for conveying the mixture into said second vessel, said basin having an upper edge over which the mixture flows into said second vessel and the upper edge of said basin being located vertically upwardly above the lower end of said tubular section for preventing the passage of air into said tubular section when said basin is filled with the mixture of molten material and additives.

18. A device for introducing additives, in particular solid substances of low boiling point, into a molten metal is comprised of an intermediate vessel arranged to receive a supply of molten metal, said intermediate vessel having an outlet opening in the base thereof for discharging molten metal therefrom, a vertically positioned feed pipe for introducing additives into the molten metal extending downwardly into said intermediate vessel, wherein the improvement comprises said feed pipe having its lower outlet end positioned within the outlet opening from said intermediate vessel and having its outer surface disposed in spaced relationship from the surface of the outlet opening forming an annular space therebetween, a plurality of angularly spaced ribs positioned within the annular space and extending between the outlet end of said feed pipe and the surface of the outlet opening in said intermediate vessel for dividing the annular space into a plurality of open sections, and an outlet pipe connected to and extending downwardly from the outlet opening in said intermediate vessel for conveying molten metal from said intermediate vessel and additives introduced through said feed pipe; a feed means located above said feed pipe for introducing a rod type material downwardly into said feed pipe for admission into said outlet pipe, said outlet pipe comprising in serial arrangement from the outlet opening in said intermediate vessel to the outlet opening from said outlet pipe a converging section, a cylindrical section, a diverging section, a second converging section, a second cylindrical section, a second diverging section terminating in the outlet end of said outlet pipe, the cross-sectional size of said second cylindrical section being smaller than the cross-sectional size of said cylindrical section of said outlet pipe, said ribs extending downwardly through said outlet pipe from said outlet opening from said intermediate vessel into a location intermediate the ends of said diverging section, a second vessel arranged below the lower end of said outlet pipe for receiving the mixture of molten material and additives from said outlet pipe, a telescopically arranged refractory-lined pipe positioned to extend from the lower end of said outlet pipe into said second vessel, means for telescopically guiding said refractory-lined pipe over the exterior surface of said outlet pipe, said means comprising a guide sleeve secured to the upper end of said refractory-lined pipe and said guide sleeve having a diameter slightly greater than the diameter of the outside of said outlet pipe, guide members positioned within said guide sleeve and extending between said guide sleeve and the outer surface of said outlet pipe for guiding the telescopic movement of said refractory-lined pipe therealong, said guide members angularly spaced apart within said guide sleeve for providing passages therebetween for conveying vapors upwardly from said refractory-lined pipe to the exterior of said outlet pipe, a float formed of a refractory material secured to the exterior lower end of said refractory-lined pipe, the refractory material of said float being arranged to lift said refractory-lined pipe in a telescopic manner over said outlet pipe as the level of molten material rises within said second vessel, and a lower hook means secured to and extending downwardly from the lower end of said intermediate vessel to a position spaced above the lower end of said outlet pipe, an upper hook secured to the lower surface of said intermediate vessel and positioned adjacent the upper end of said outlet pipe and above said lower hook, an annular plate secured to

and extending radially outwardly from the upper end of said guide sleeve and arranged to engage said lower hook and said upper hook for defining the lower and upper limits of travel of said refractory-lined pipe as it passes telescopically over said outlet pipe.

* * * * *