(12) INTERNATIONAL APPLICATION PUBLISHED UNDER THE PATENT COOPERATION TREATY (PCT)

(19) World Intellectual Property Organization
International Bureau

(43) International Publication Date
13 December 2007 (13.12.2007)

PCT

(10) International Publication Number
WO 2007/143368 A3

(51) International Patent Classification:
G01L 11/02 (2006.01) *G01L 1/24* (2006.01)

(21) International Application Number:
PCT/US2007/069206

(22) International Filing Date: 18 May 2007 (18.05.2007)

(25) Filing Language: English

(26) Publication Language: English

(30) Priority Data:
11/445,765 2 June 2006 (02.06.2006) US

(71) Applicant *(for all designated States except US)*: **BAKER HUGHES INCORPORATED** [US/US]; P.O. Box 4740, Houston, TX 77210-4740 (US).

(72) Inventor: **CHILDERS, Brooks**; 1425 Red Hawk Run, Christiansburg, VA 24073.

(74) Agents: **CARSON, Matt, W.** et al.; Baker Hughes Incorporated, 9100 Emmott Road, Houston, TX 77040 (US).

(81) Designated States *(unless otherwise indicated, for every kind of national protection available)*: AE, AG, AL, AM, AT, AU, AZ, BA, BB, BG, BH, BR, BW, BY, BZ, CA, CH, CN, CO, CR, CU, CZ, DE, DK, DM, DZ, EC, EE, EG, ES, FI, GB, GD, GE, GH, GM, GT, HN, HR, HU, ID, IL, IN, IS, JP, KE, KG, KM, KN, KP, KR, KZ, LA, LC, LK, LR, LS, LT, LU, LY, MA, MD, ME, MG, MK, MN, MW, MX, MY, MZ, NA, NG, NI, NO, NZ, OM, PG, PH, PL, PT, RO, RS, RU, SC, SD, SE, SG, SK, SL, SM, SV, SY, TJ, TM, TN, TR, TT, TZ, UA, UG, US, UZ, VC, VN, ZA, ZM, ZW.

(84) Designated States *(unless otherwise indicated, for every kind of regional protection available)*: ARIPO (BW, GH, GM, KE, LS, MW, MZ, NA, SD, SL, SZ, TZ, UG, ZM, ZW), Eurasian (AM, AZ, BY, KG, KZ, MD, RU, TJ, TM), European (AT, BE, BG, CH, CY, CZ, DE, DK, EE, ES, FI, FR, GB, GR, HU, IE, IS, IT, LT, LU, LV, MC, MT, NL, PL, PT, RO, SE, SI, SK, TR), OAPI (BF, BJ, CF, CG, CI, CM, GA, GN, GQ, GW, ML, MR, NE, SN, TD, TG).

Published:
— *with international search report*
— *before the expiration of the time limit for amending the claims and to be republished in the event of receipt of amendments*

(88) Date of publication of the international search report:
3 April 2008

(54) Title: MULTI-CORE OPTICAL FIBER PRESSURE SENSOR

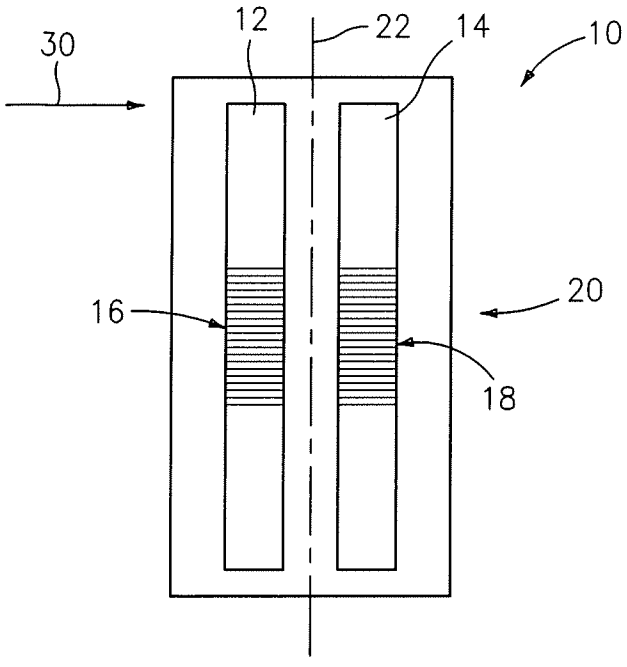

(57) Abstract: A multi-core optical fiber pressure sensor is described, which sensor includes an optical fiber having at least two cores, wherein the cores have collocated measurement portions, for example in-fiber interferometers or Bragg Grating portions. In an exemplary embodiment, the fiber is arranged such that a pressure induced force will act on the multi-core fiber at said collocated position, affecting the light guiding cores in a different manner. In another exemplary embodiment, the optical fiber is configured to bend in response to pressure changes.

WO 2007/143368 A3

INTERNATIONAL SEARCH REPORT

International application No
PCT/US2007/069206

A. CLASSIFICATION OF SUBJECT MATTER
INV. G01L11/02 G01L1/24

According to International Patent Classification (IPC) or to both national classification and IPC

B. FIELDS SEARCHED

Minimum documentation searched (classification system followed by classification symbols)
G01L

Documentation searched other than minimum documentation to the extent that such documents are included in the fields searched

Electronic data base consulted during the international search (name of data base and, where practical, search terms used)
EPO-Internal, WPI Data, INSPEC

C. DOCUMENTS CONSIDERED TO BE RELEVANT

Category*	Citation of document, with indication, where appropriate, of the relevant passages	Relevant to claim No.
X	US 2006/013523 A1 (CHILDLERS BROOKS A ET AL) 19 January 2006 (2006-01-19) abstract figure 7 paragraphs [0007], [0012] paragraphs [0016], [0017] paragraphs [0037], [0041], [0042]	1,7, 12-14,20
Y		2-6, 8-11, 15-19,21
Y	US 6 218 661 B1 (SCHROEDER ROBERT J ET AL) 17 April 2001 (2001-04-17) abstract figure 3 columns 5,6 columns 8-10	2-5,9, 11, 15-18,21

-/--

[X] Further documents are listed in the continuation of Box C.

[X] See patent family annex.

* Special categories of cited documents :

"A" document defining the general state of the art which is not considered to be of particular relevance

"E" earlier document but published on or after the international filing date

"L" document which may throw doubts on priority claim(s) or which is cited to establish the publication date of another citation or other special reason (as specified)

"O" document referring to an oral disclosure, use, exhibition or other means

"P" document published prior to the international filing date but later than the priority date claimed

"T" later document published after the international filing date or priority date and not in conflict with the application but cited to understand the principle or theory underlying the invention

"X" document of particular relevance; the claimed invention cannot be considered novel or cannot be considered to involve an inventive step when the document is taken alone

"Y" document of particular relevance; the claimed invention cannot be considered to involve an inventive step when the document is combined with one or more other such documents, such combination being obvious to a person skilled in the art.

"&" document member of the same patent family

Date of the actual completion of the international search	Date of mailing of the international search report
19 February 2008	26/02/2008

Name and mailing address of the ISA/	Authorized officer
European Patent Office, P.B. 5818 Patentlaan 2 NL – 2280 HV Rijswijk Tel. (+31-70) 340-2040, Tx. 31 651 epo nl, Fax: (+31-70) 340-3016	NELVA-PASQUAL, F

INTERNATIONAL SEARCH REPORT

International application No
PCT/US2007/069206

C(Continuation). DOCUMENTS CONSIDERED TO BE RELEVANT

Category*	Citation of document, with indication, where appropriate, of the relevant passages	Relevant to claim No.
Y	EP 0 622 622 A (HITACHI LTD) 2 November 1994 (1994-11-02) abstract figures 15-19 column 16, line 44 - column 18, line 53	2-5,9, 11, 15-18,21
Y	US 5 841 131 A (SCHROEDER ROBERT J ET AL) 24 November 1998 (1998-11-24) abstract figures 9-25 columns 5,6 columns 9-12	2,4,5,8, 15,17,18
Y	WO 00/37914 A (CIDRA CORP) 29 June 2000 (2000-06-29) abstract figures 1-29 pages 3,4 page 7, line 16 page 28, line 29 - page 34, line 29 page 36, line 5	2-6, 8-11, 15-19,21
A	US 2004/206892 A1 (MARTINEZ CHRISTOPHE ET AL) 21 October 2004 (2004-10-21) abstract figures 8,9,11 paragraphs [0002], [0013] - [0015] paragraphs [0022], [0031] - [0033] paragraphs [0146], [0202]	1,7,8, 12,14,20
A	US 5 563 967 A (HAAKE JOHN M) 8 October 1996 (1996-10-08) the whole document	1,7,14, 20
A	US 2004/165178 A1 (CLEMENTS GREGORY MINOT) 26 August 2004 (2004-08-26) the whole document	1,7, 12-14
A	ROMANIUK R S: "Special fibres for application environments" PROCEEDINGS OF THE SPIE - THE INTERNATIONAL SOCIETY FOR OPTICAL ENGINEERING USA, vol. 1174, 1990, pages 332-357, XP008088771 ISSN: 0277-786X the whole document	1,7, 12-14

INTERNATIONAL SEARCH REPORT

Information on patent family members

International application No
PCT/US2007/069206

Patent document cited in search report	Publication date	Patent family member(s)	Publication date
US 2006013523 A1	19-01-2006	US 2007065077 A1	22-03-2007
US 6218661 B1	17-04-2001	NONE	
EP 0622622 A	02-11-1994	DE 69413108 D1	15-10-1998
		DE 69413108 T2	08-04-1999
		JP 6307953 A	04-11-1994
		US 5693936 A	02-12-1997
US 5841131 A	24-11-1998	AU 8288398 A	08-02-1999
		CA 2295919 A1	21-01-1999
		CN 1269881 A	11-10-2000
		EP 0995091 A1	26-04-2000
		ID 26513 A	11-01-2001
		JP 2002504663 T	12-02-2002
		NO 20000039 A	07-03-2000
		RU 2205374 C2	27-05-2003
		WO 9902953 A1	21-01-1999
WO 0037914 A	29-06-2000	AU 3996400 A	12-07-2000
		CA 2353567 A1	29-06-2000
		DE 69923783 D1	24-03-2005
		EP 1137920 A2	04-10-2001
		JP 2004506869 T	04-03-2004
		US 6422084 B1	23-07-2002
US 2004206892 A1	21-10-2004	AT 340352 T	15-10-2006
		CA 2450988 A1	03-01-2003
		CN 1547659 A	17-11-2004
		DE 60214852 T2	19-04-2007
		EP 1405043 A1	07-04-2004
		FR 2826448 A1	27-12-2002
		WO 03001156 A1	03-01-2003
		JP 2004530899 T	07-10-2004
US 5563967 A	08-10-1996	AU 7162196 A	14-04-1998
		WO 9812525 A1	26-03-1998
US 2004165178 A1	26-08-2004	NONE	