(No Model.)

C. W. THOMPSON.

GATE.

No. 456,260. Patented July 21, 1891.

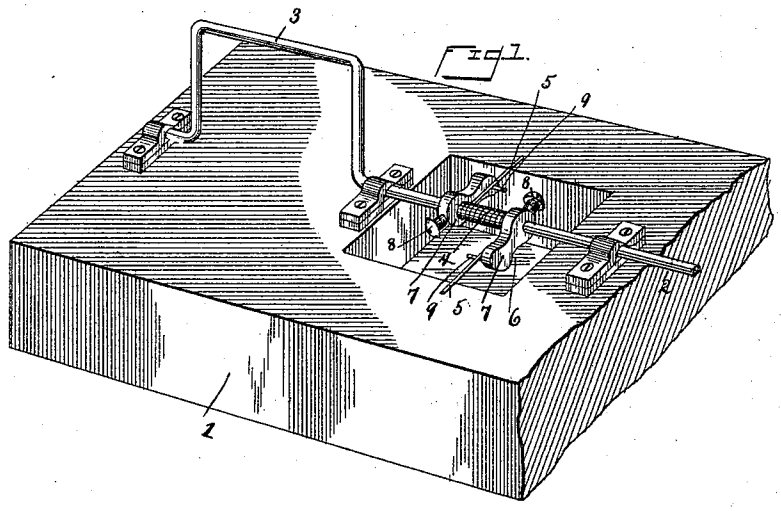

Fig. 1.

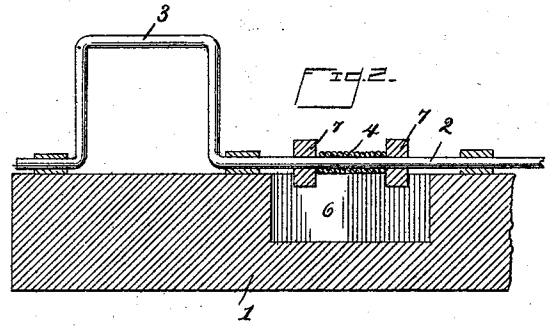

Fig. 2.

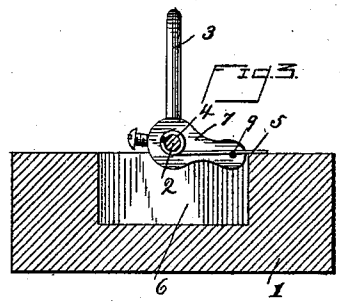

Fig. 3.

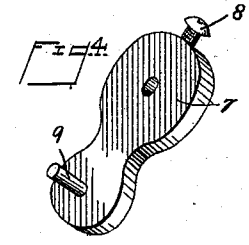

Fig. 4.

Witnesses

Chas. A. Ford.

Wm. Bagger

Inventor

Chas. W. Thompson

By his Attorneys,

C. A. Snow & Co.

THE NORRIS PETERS CO., PHOTO-LITHO., WASHINGTON, D. C.

UNITED STATES PATENT OFFICE.

CHARLES WILLIAM THOMPSON, OF TOMALES, CALIFORNIA.

GATE.

SPECIFICATION forming part of Letters Patent No. 456,260, dated July 21, 1891.

Application filed March 4, 1891. Serial No. 383,776. (No model.)

To all whom it may concern:

Be it known that I, CHARLES WILLIAM THOMPSON, a citizen of the United States, residing at Tomales, in the county of Marin and State of California, have invented a new and useful Gate, of which the following is a specification.

This invention relates to automatic wagon-gates, and it is an improvement on the device of this class for which Letters Patent of the United States No. 440,853 were granted to myself on the 18th day of November, 1890. This is one of that class of gates in which the gate is connected by suitable connecting devices with a rock-shaft having an upwardly-extending bail or wheel-iron lying in the path of the passing vehicles, said rock-shaft serving to impart a swinging movement to the gate, and the rock-shaft being retained in and restored to its normal position after operation by the use of a spring. In my previous patent, to which reference has above been made, the said rock-shaft is connected with one end of a flat leaf-spring, the other end of which is connected with a fixed point of attachment.

My present invention has for its object to provide an improved spring for actuating the rock-shaft which shall be simple in construction and efficient in operation; and the invention resides particularly in the means for retaining the bail or wheel-iron in operative position and restoring the same to the normal position after operation; and it consists in the improved construction and arrangement of details, which will be hereinafter fully described, and particularly pointed out in the claims.

In the drawings hereto annexed, Figure 1 is a perspective view of the rock-shaft and the spring for operating the same which constitutes my invention. Fig. 2 is a longitudinal sectional view of the same. Fig. 3 is a vertical transverse sectional view. Fig. 4 is a perspective detail view of one of the lugs forming part of the invention.

Like numerals of reference indicate like parts in all the figures.

1 designates a sill or base which is provided with bearings for the rock-shaft 2, having the upwardly-extending bail or wheel-iron 3.

4 designates a spring which is coiled upon the rock-shaft and having projecting ends 5 5. This spring is arranged directly above a recess 6, formed in the sill or base, and the projecting ends 5 of the spring 4 rest upon the upper edges of said recess. Suitably secured upon the rock-shaft 2, adjacent to the spring 4, are the collars 7 7, having set-screws 8, by means of which they are secured adjustably in position. Said collars are provided with laterally-extending lugs 9, extending under the oppositely-disposed arms 5 of the spring 4. The several parts are to be so arranged that the bail or wheel-iron 5 shall normally extend vertically in an upward direction.

The rock-shaft is to be connected in any suitable manner with the gate which is to be operated; but this forms no part of my present invention and has not been illustrated in the drawings hereto annexed, it being understood that my invention is applicable to a great variety of gates of different construction.

In operation the wheel-iron is depressed by the wheels or vehicles passing over the same, thus oscillating the rock-shaft, which immediately after the passage of such vehicle is restored to its normal position by the action of the spring. This device is exceedingly simple in construction and permits of the spring being easily adjusted or its tension regulated whenever it shall be desired to do so.

Having thus described my invention, what I claim is—

1. In a device of the class described, the combination of the rock-shaft having an upwardly-extending bail or wheel-iron, a spring coiled upon said rock-shaft and having outwardly-extending arms, and collars secured to said rock-shaft and having lugs extending laterally under the ends or arms of said spring, substantially as and for the purpose set forth.

2. The combination of the rock-shaft having an upwardly-extending bail or wheel-iron, a spring coiled upon said shaft and having oppositely-extending arms, and collars having set-screws whereby they are mounted adjustably upon the rock-shaft adjacent to the spring and provided with lugs extending laterally under the ends of the latter, substantially as set forth.

3. The combination of a sill having a recess, the rock-shaft mounted upon the sill and having an upwardly-extending bail or wheel-iron, a spring coiled upon the shaft above the recess in the sill and having oppositely-extending arms resting upon the upper edges of the latter, the collars secured adjustably adjacent to the ends of the spring, and the lugs extending from said collars laterally under the arms of said spring, substantially as and for the purpose set forth.

In testimony that I claim the foregoing as my own I have hereto affixed my signature in presence of two witnesses.

CHAS. WILLIAM THOMPSON.

Witnesses:

THOS. J. ABLES,

W. F. BASSETT.