Aug. 2, 1949. C. A. GETZ 2,477,736

FIRE EXTINGUISHING SYSTEM

Filed Sept. 28, 1942 6 Sheets-Sheet 1

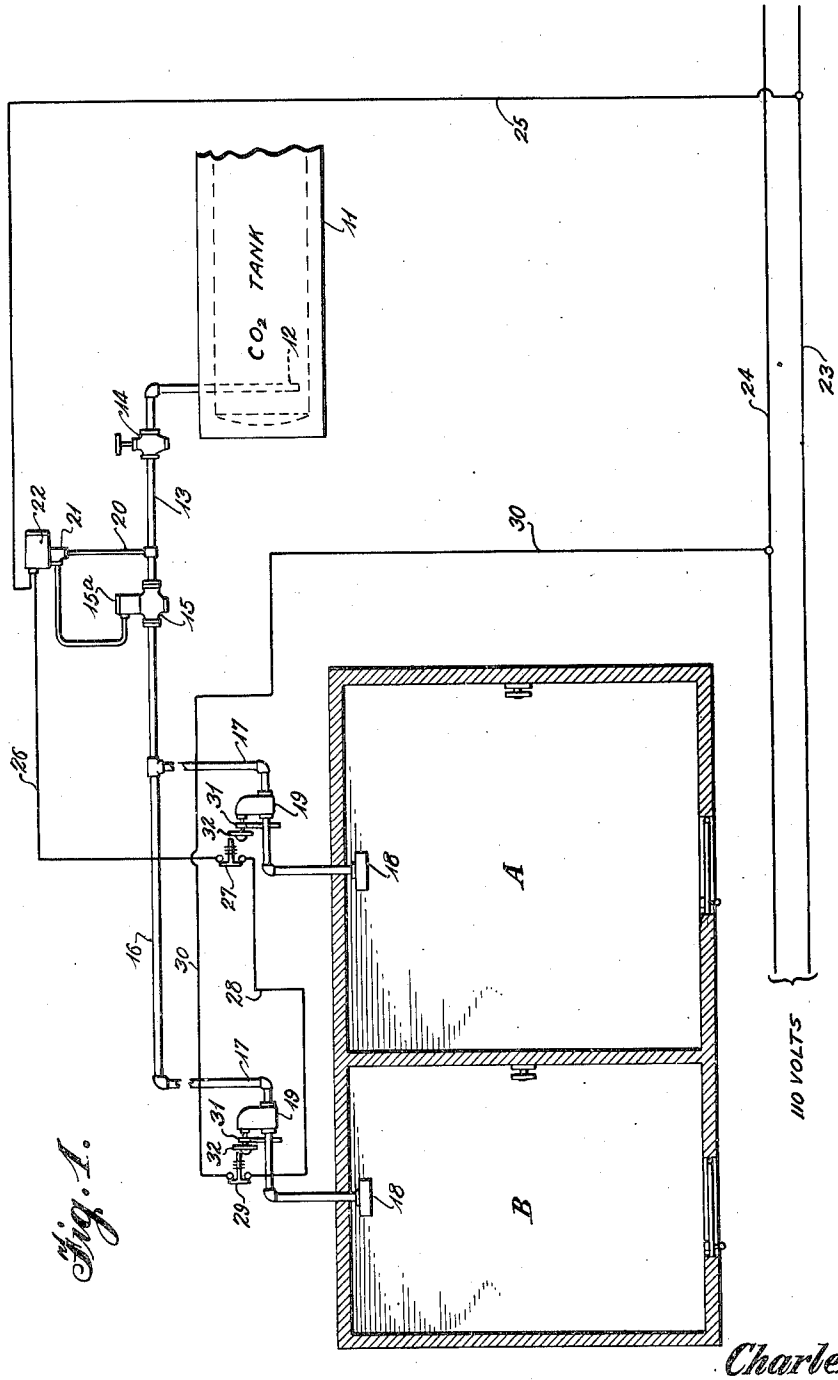

Fig. 1.

Inventor
Charles A. Getz

By L. Donald Myers
Attorney

Aug. 2, 1949. C. A. GETZ 2,477,736

FIRE EXTINGUISHING SYSTEM

Filed Sept. 28, 1942 6 Sheets-Sheet 2

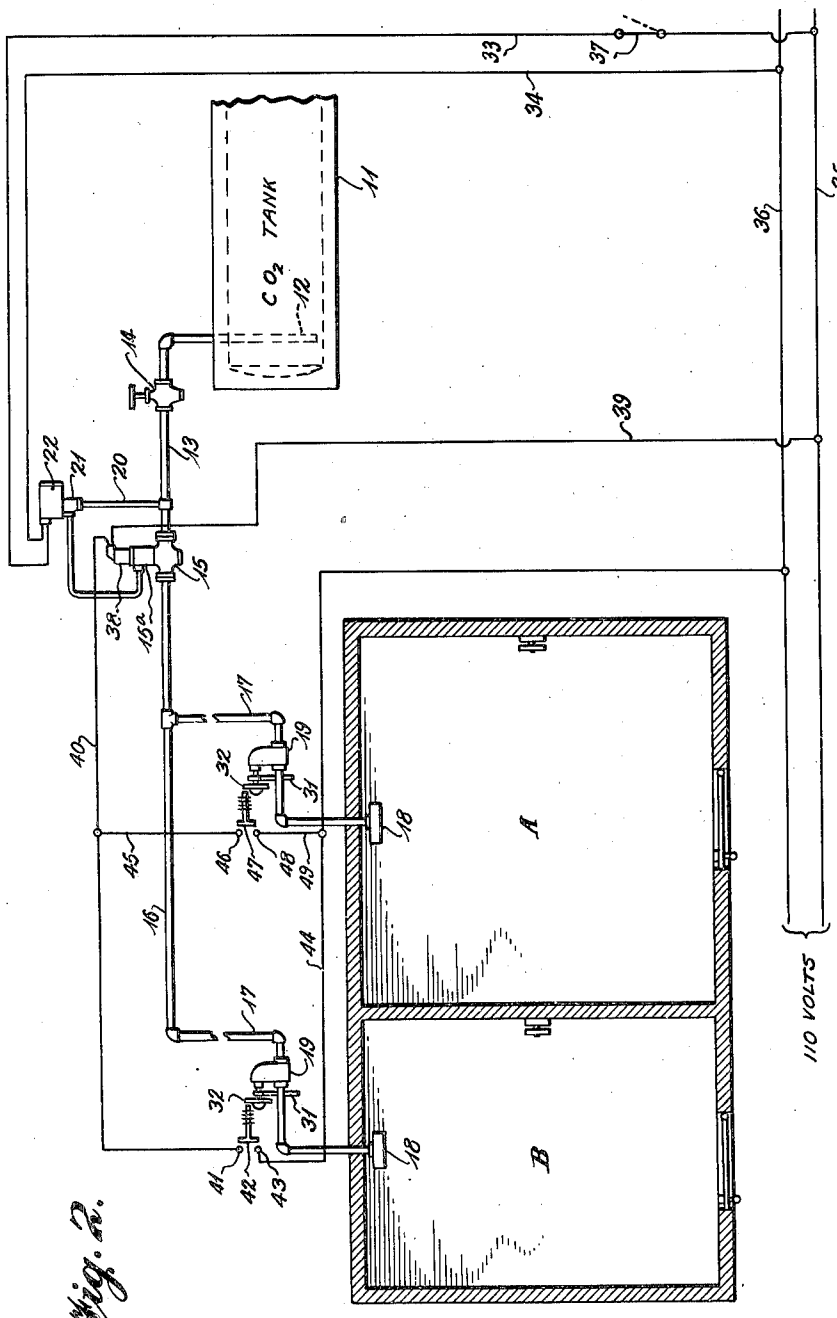

Fig. 2.

Inventor

Charles A. Getz

By L. Donald Rogers

Attorney

Aug. 2, 1949. C. A. GETZ 2,477,736

FIRE EXTINGUISHING SYSTEM

Filed Sept. 28, 1942 6 Sheets-Sheet 3

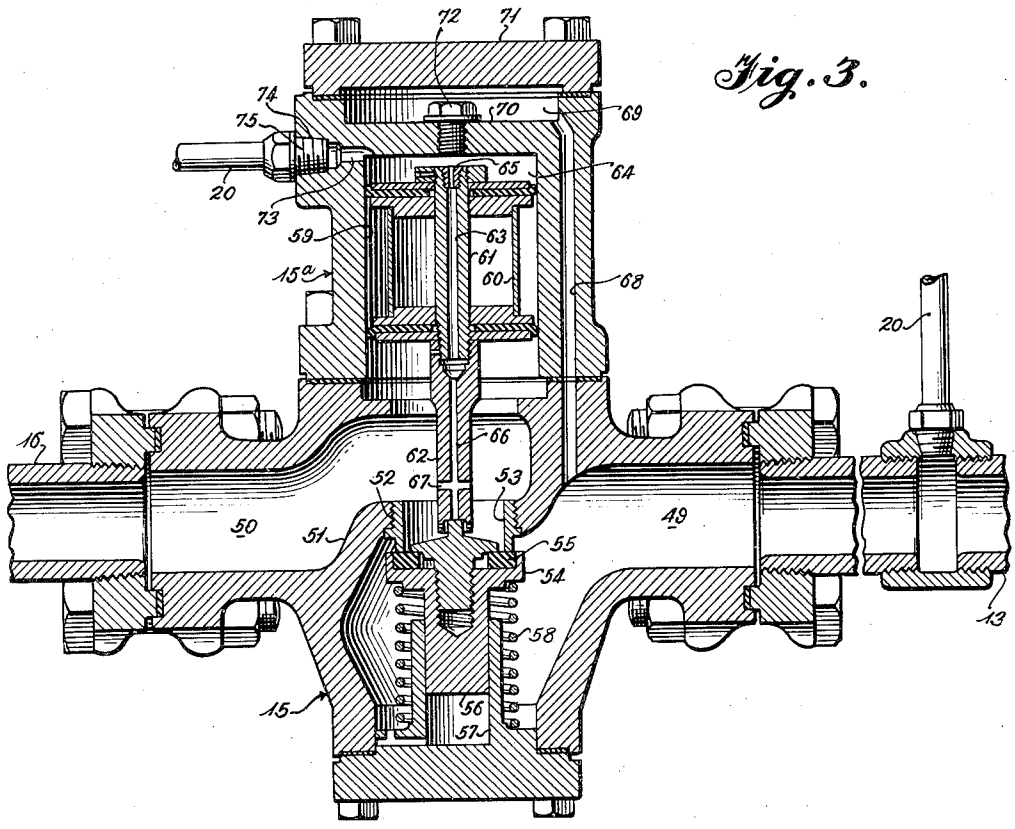

Fig. 3.

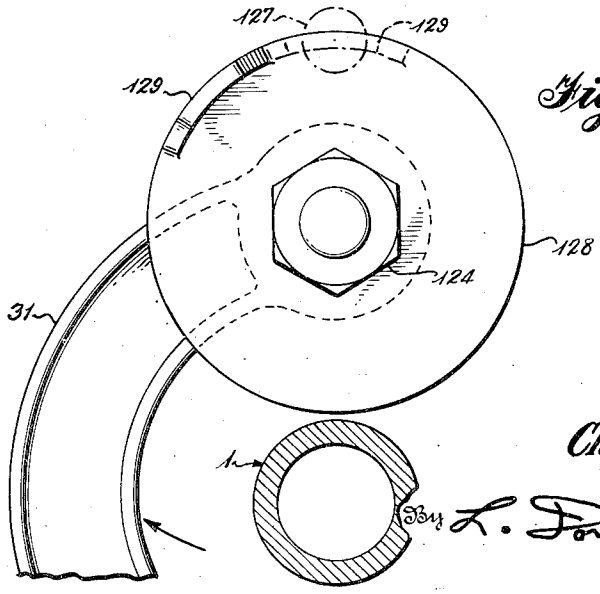

Fig. 9.

Inventor

Charles A. Getz

By L. Donald Myers

Attorney

Aug. 2, 1949. C. A. GETZ 2,477,736

FIRE EXTINGUISHING SYSTEM

Filed Sept. 28, 1942 6 Sheets-Sheet 4

Fig. 4.

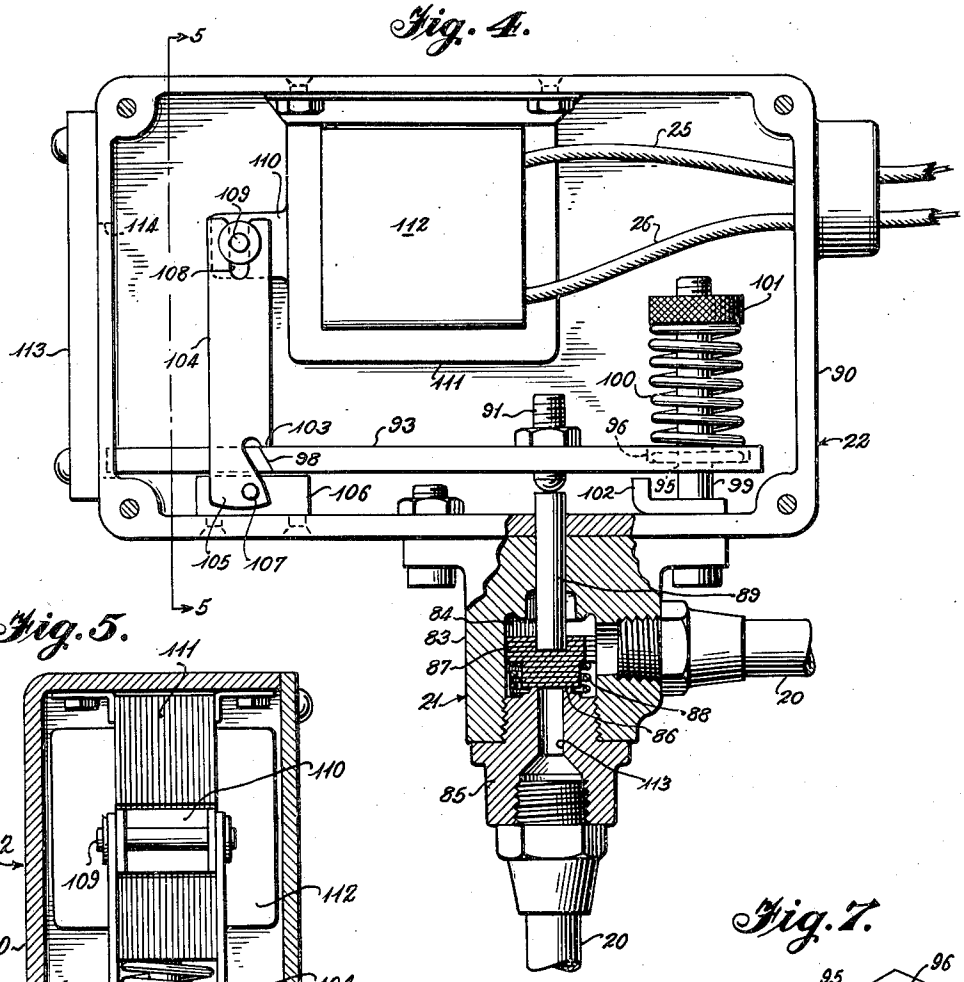

Fig. 5.

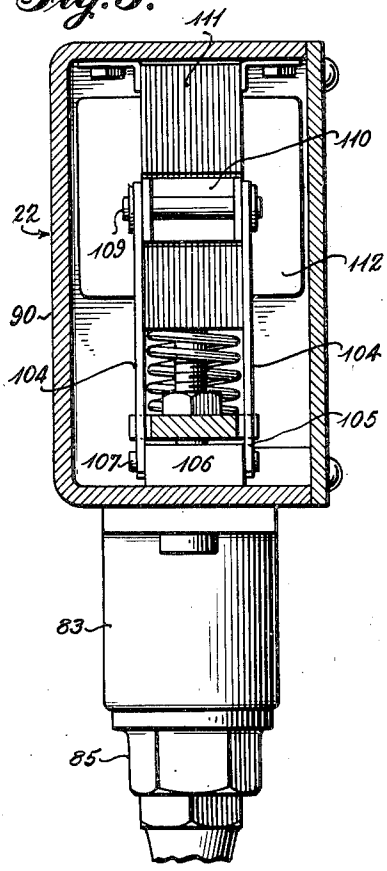

Fig. 6.

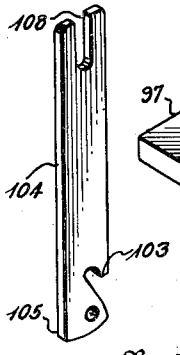

Fig. 7.

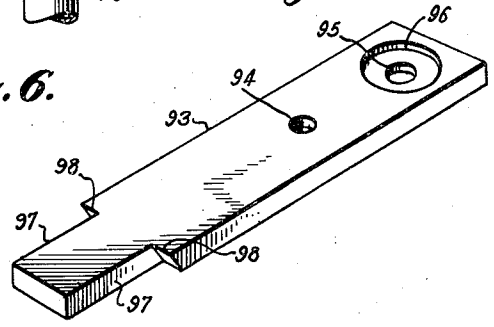

Inventor

Charles A. Getz

By L. Donald Myers

Attorney

Aug. 2, 1949. C. A. GETZ 2,477,736

FIRE EXTINGUISHING SYSTEM

Filed Sept. 28, 1942 6 Sheets-Sheet 5

Fig. 8.

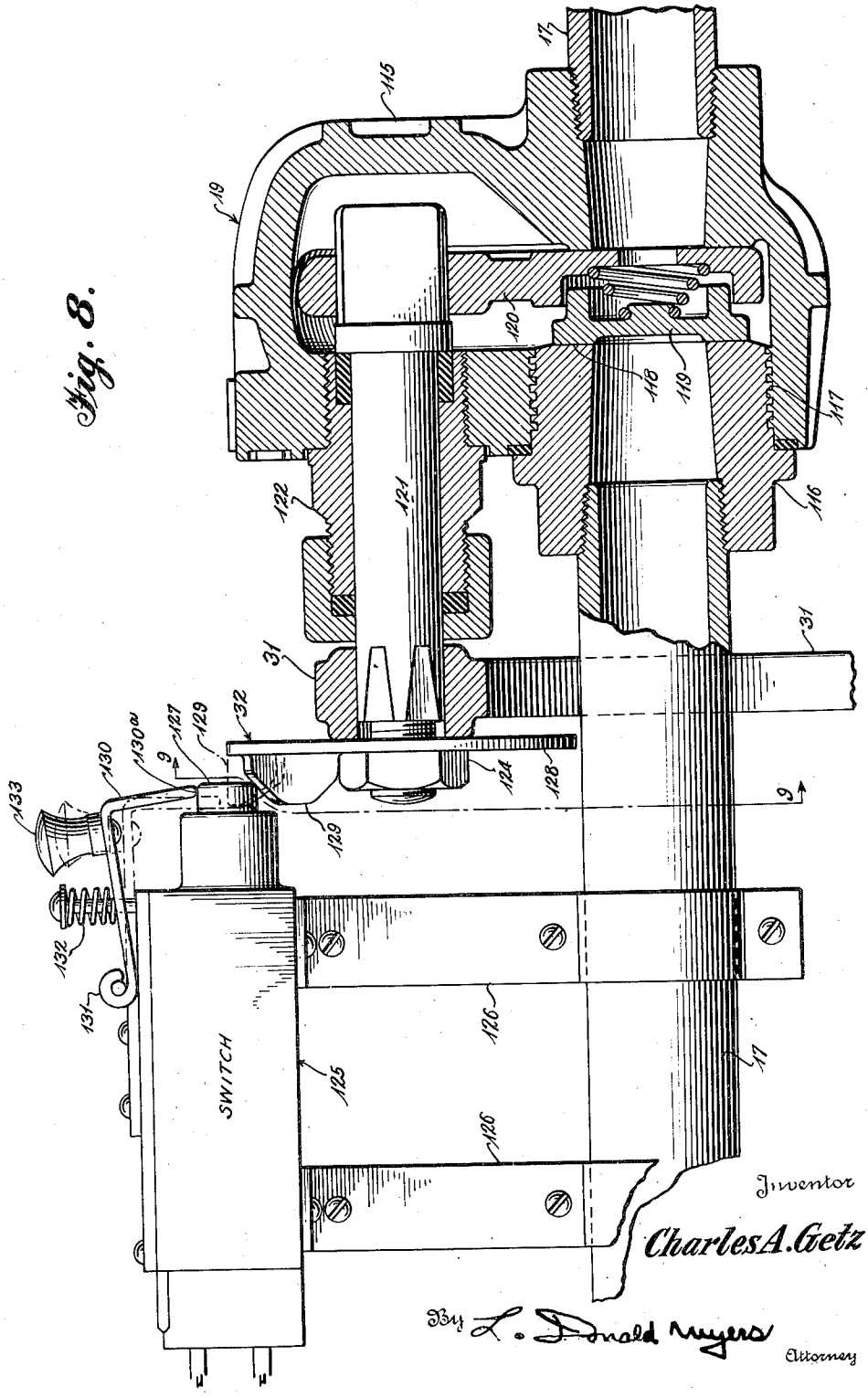

Inventor
Charles A. Getz
By L. Donald Rogers
Attorney

Aug. 2, 1949. C. A. GETZ 2,477,736

FIRE EXTINGUISHING SYSTEM

Filed Sept. 28, 1942 6 Sheets-Sheet 6

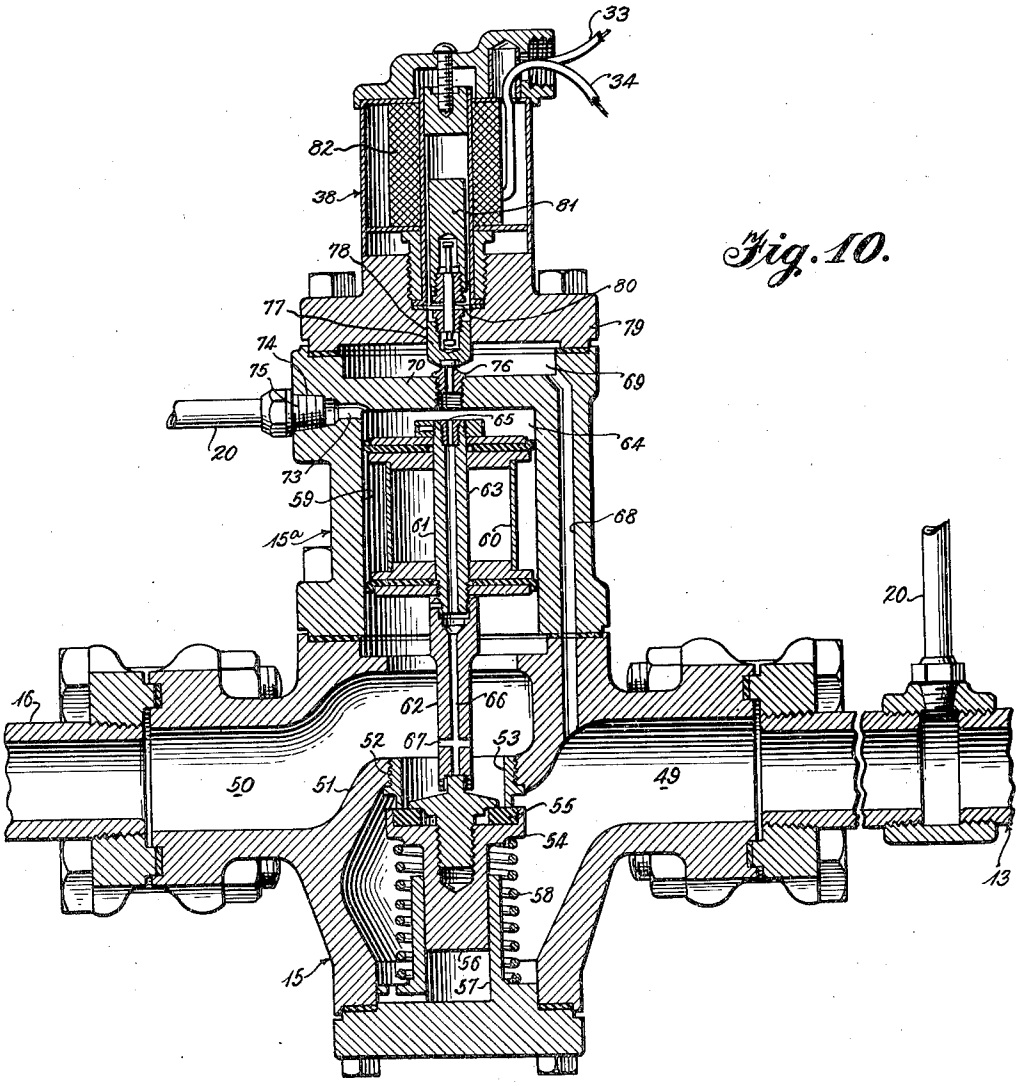

Fig. 10.

Inventor
Charles A. Getz

By L. Donald Myers Attorney

Patented Aug. 2, 1949

2,477,736

UNITED STATES PATENT OFFICE

2,477,736

FIRE EXTINGUISHING SYSTEM

Charles A. Getz, Glen Ellyn, Ill., assignor, by mesne assignments, to Cardox Corporation, Chicago, Ill., a corporation of Illinois

Application September 28, 1942, Serial No. 459,995

9 Claims. (Cl. 169—11)

1

This invention relates to new and useful improvements in fire extinguishing systems employing carbon dioxide as the extinguishing medium.

Fire extinguishing systems which are based on the method covered by the patent to Eric Geertz, No. 2,143,311, issued January 10, 1939, are particularly adapted for selectively protecting a plurality of independent hazards because the entire amount of low temperature and pressure liquid carbon dioxide made available for use in such a system is stored in a large capacity, insulated tank and this type of storage permits release of the extinguishing medium into the main header of the system by means of a single master control valve while separate selector valves are employed for directing the extinguishing medium into the particular branch lines that lead from the header to the various hazards. The use of a single master control valve for confining the liquid in the bulk storage tank is desirable because it is then only necessary to maintain a short length of piping and one of the valves "bubble tight"; i. e., sealed against leakage of liquid or vapor. Furthermore, it is possible to more rapidly deliver the liquid carbon dioxide to the discharge nozzles at the several hazards when the header is not filled with the carbon dioxide extinguishing medium in vapor form.

On the other hand, the use of a master control valve in close proximity to the storage tank and selector valves in the various branch lines at points remote from said master valve presents a special problem when the positiveness and simplicity of an entirely manually controlled system is desired. That is to say, a system of this type would not be considered practical or entirely satisfactory if its operation in extinguishing a fire in a particular hazard remotely located with respect to the storage tank required an attendant to go to the locations of both the proper selector valve and the master control valve to manually open the same before the extinguishing medium could be delivered to the threatened hazard or hazards.

It is the primary object of this invention to provide manually controlled fire extinguishing systems, employing as the extinguishing medium low temperature and pressure liquid carbon dioxide confined in a bulk storage tank, with a master valve at the tank for controlling the release of the extinguishing medium into the distributing header of the system and a selector valve in each branch line for controlling the delivery of the extinguishing medium to the threatened hazard or hazards.

A further important object of the invention is to provide a system of the aforementioned type in which manual opening of any one of the selector valves will cause the master control valve

2

to be opened without requiring any additional action on the part of the attendant.

Still another important object of the invention is to provide a fire extinguishing system, having a master control valve and separate selector valves, in which manual opening or closing of any one of the selector valves will result in causing the remotely positioned master control valve to be opened or closed, respectively, without requiring any additional action on the part of the attendant.

Another object of the invention is to provide systems employing a master valve and selector valves for controlling the delivery of the fire extinguishing medium individually to the several hazards and in which one or more electric circuits are employed for operatively connecting the selector valves to the master control valve; said systems being further provided with means for causing the master valve to be opened automatically in case the supply of electric current to the said circuit, or circuits, fails so that discharge of the extinguisher at the hazards will then be controlled entirely by the selector valves.

Other objects and advantages of the invention will be apparent during the course of the following description.

In the accompanying drawings forming a part of this specification and in which like numerals are employed to designate like parts throughout the same,

Figure 1 is a diagrammatic view of a fire extinguishing system embodying this invention,

Figure 2 is a similar view to Fig. 1 but illustrates a slightly modified form of fire extinguishing system,

Figure 3 is a vertical sectional view of the master control valve which is normally employed in the system of Fig. 1 for maintaining the carbon dioxide confined in its storage tank whereby the distribution header will be of the non-pressure type,

Figure 4 is a partly elevational view and partly vertical sectional view of a form of pilot valve which will function to automatically effect opening of the master control valve and conversion of the non-pressure header to a pressure header upon failure of the electric power, said pilot valve being employed in both of the systems illustrated in Figs. 1 and 2,

Figure 5 is a vertical sectional view taken on line 5—5 of Fig. 4,

Figures 6 and 7 are detail perspective views of elements incorporated in the electric control mechanism for the pilot valve of Figs. 4 and 5,

Figure 8 is a partly vertical sectional view and partly side elevational view of a manually operable selector valve with circuit controlling means for the master control valve operatively associated therewith,

Figure 9 is a sectional view taken on line 9—9 of Fig. 8, and

Figure 10 is a vertical sectional view of the master control valve which is normally employed as a part of the system of Fig. 2 for maintaining the carbon dioxide confined in its storage tank whereby the distribution header will be of the non-pressure type.

In the drawings, wherein for the purpose of illustration are shown the preferred embodiments of this invention, and first particularly referring to Fig. 1, two different fire hazards, which are to be given fire protection, are referred to by the reference characters A and B. Although these two hazards are illustrated as being enclosed spaces which are to be flooded by the carbon dioxide to effect extinguishment of a fire, it is to be understood that the system of this figure is not limited in its application to hazards of this character or to the discharge of carbon dioxide to effect flooding of an enclosed space. The system is just as applicable to the extinguishment of a fire by the direct application of the carbon dioxide to the object being consumed by the fire. It will be noted that the hazards A and B are illustrated as being of different sizes. The system is of such a flexible character that it is capable of protecting different sized hazards, or hazards which require the discharge of different amounts of carbon dioxide to effect extinguishment of fires.

The liquid carbon dioxide employed for extinguishing fires involving the hazards A and B is stored in the insulated, bulk storage tank 11 and is maintained at the desired low temperature, and its corresponding vapor pressure, in accordance with the teachings of the aforementioned patent issued to Eric Geertz. The capacity of the storage tank 11 may be varied to provide the types of discharges that are deemed to be most practical for protecting the particular hazards involved. In other words, the capacity of the storage tank 11 may be such that it will afford protection for all of the hazards without requiring the tank to be refilled or the capacity may be limited so as to afford simultaneous protection; i. e., actual extinguishment of fires, in only a limited number of the hazards without a refill. The character of the respective hazards, the proximity of the same with respect to each other, and other well known factors will determine the capacity of the storage tank for any given system.

Liquid carbon dioxide is obtained from the storage tank 11 by means of the dip tube or pipe 12 which terminates at a level which is relatively close to the bottom of the tank. This dip tube 12 extends from the tank and takes the form of a discharge pipe line 13 having a manually operable shut-off valve 14 properly connected therein. This shut-off valve is normally open and is only employed for confining the carbon dioxide in the storage tank 11 when changes or repairs are being made in the remainder of the system.

The outer end of the discharge pipe line 13 is connected to the inlet side of the master control valve 15. The discharge side of this master control valve is connected to the header 16 that is common to all of the branch lines 17 that lead to the discharge devices 18 associated with the various hazards.

The master control valve 15 is intended to normally function to confine the carbon dioxide in the storage tank 11 and the relatively short length of discharge pipe 13. Therefore, the master control valve 15 normally is closed. As the master control valve is normally subjected to the pressure of the carbon dioxide stored in the tank 11, this valve must be maintained "bubble-tight," or in a condition to prevent leakage of carbon dioxide past the same into the common header 16. Therefore, the master control valve renders the header 16 of the non-pressure type. Because of this non-pressure condition of the header and its branch lines 17, the joints between pipe sections need not be maintained absolutely leakproof and the selector valves 19, which are provided for controlling flow of the carbon dioxide through their respective branch lines 17, need not be "bubble-tight."

The master control valve 15 is opened and closed as a result of the development of differential fluid pressure conditions within its casing. For this reason, a pressure chamber is formed in the upper portion 15*a* of the valve casing. Carbon dioxide is controllably delivered to the pressure chamber of the valve casing portion 15*a* through the control line 20. A pilot valve 21 is provided in this control line and is normally closed so that the chamber in the valve casing portion 15*a* normally will not be supplied with the fluid pressure which functions to open the pilot valve.

An electrical control device 22 is associated with the pilot valve 21. This electrical device includes a solenoid that controls the condition of a trip lever which in turn controls the operation of a valve actuating lever. That is to say, when the solenoid coil is energized, the actuating lever will function to maintain the pilot valve 21 closed so that fluid pressure will not be created in the pressure chamber of the master control valve casing portion 15*a* to open the master valve. When the solenoid coil of the electric control device 22 is de-energized, the pilot valve 21 will open and fluid pressure will flow from the carbon dioxide discharge line 13 through the control line 20 into the master control valve casing portion 15*a* for effecting opening of this latter valve.

The electric circuit for the control device 22 includes the two main supply lines 23 and 24. A circuit line 25 extends from the supply line 23 to one terminal or binding post of the solenoid coil of the electric control device 22. A second circuit wire 26 extends from the second terminal or binding post of the solenoid coil of the control device 22 to one terminal of the normally closed switch 27. The circuit wire 28 extends from the second post of this switch 27 to one post of a normally closed switch 29. The circuit wire 30 extends from the second post of the switch 29 to the main supply wire 24. It will be seen, therefore, that as long as both of the switches 27 and 29 are closed a circuit will be established for the solenoid coil of the electric control device 22 but when either one of the switches 27 and 29 is opened, the circuit will be broken for said solenoid coil and the solenoid will be de-energized. As was stated above, the pilot valve 21 will open when the electric control device 22 is de-energized.

The two selector valves 19 are of identical construction. They are of such a design that they must be manually opened and closed. Therefore, each selector valve is provided with an operating lever 31. A switch operating cam 32 is operatively associated with each valve actuating lever 31. Fig. 1 discloses the valve operating lever 31 and the switch operating cam 32 of each selector valve in the positions they assume when the valve is closed. When the lever 31 of a selector valve is actuated to open the valve, the associated cam 32 will be moved so that it will actuate its circuit

controlling switch 27 or 29 so as to open the switch. It will be seen, therefore, that whenever an attendant detects a fire in a hazard he can bring about extinguishment of that fire by merely manually opening the selector valve 19 which controls flow of carbon dioxide through the branch line 17 extending to the involved hazard. This opening of a selector valve will cause the circuit to the electric control device 22 to be broken and the pilot valve 21 then will be opened. Opening of the pilot valve will cause the master control valve 15 to open and the carbon dioxide will flow through the discharge line 13 and the master control valve 15 into the header 16 and from this header through the branch line 17 which has its selector valve 19 opened. When the fire is extinguished, the attendant merely closes the opened selector valve 19 and discharge of carbon dioxide at the involved hazard ceases. The electric control device 22 for the pilot valve 21 is so constructed that it must be reset manually to cause the pilot valve 21 to close. When the pilot valve is closed flow of carbon dioxide through the control line 20 to the master control valve casing portion 15*a* is cut off and the master control valve will be closed. Any suitable means, not shown, may be employed for bleeding off the carbon dioxide trapped between the master control valve 15 and the selector valves 19.

From the above description of the mode of operation of the system shown in Fig. 1, it will be appreciated that any failure of power supply will cause the electric control device 22 to be de-energized with the result that the master control valve 15 will be opened. The system will then operate with the non-pressure header 16 converted to a pressure header and with the selector valves 19 functioning to control the delivery of the extinguishing medium to involved hazards.

The system of Fig. 2 differs from the system of Fig. 1 in only one fundamental principle. In the system of Fig. 1, the master control valve will be opened as a result of opening one of the selector valves but the master control valve will stay open after the selector valve is closed. In the system of Fig. 2, the master control valve will not only be opened when a selector valve is opened but it also will be closed when the actuated selector valve is closed. The instrumentalities which bring about this difference in mode of operation will now be described.

We again have two hazards A and B illustrated in Fig. 2. The carbon dioxide storage tank 11 is provided with its dip tube 12, the discharge line 13 with its shut-off valve 14 and the master control valve 15. Flow of carbon dioxide through the master control valve into the header 16 is brought about when the master control valve is opened. The header 16 is provided with the branch lines 17 that extend to the discharge devices 18 for the respective hazards. A selector valve 19 is provided for each one of the branch lines 17.

The master control valve casing portion 15*a* is formed with a pressure chamber that is controllably supplied with carbon dioxide through the control line 20. A pilot valve 21 is provided in this line and is controlled by the electrical device 22. The supply of current to the electric control device 22 is provided by the circuit wires 33 and 34 which extend to the two main supply wires 35 and 36 respectively. A suitable switch 37 is connected in the circuit to the control device 22 so that opening of the switch will result in de-energizing the solenoid coil for the control device 22.

With the mechanism so far described, it will be appreciated that the master control valve 15 will be opened as a result of failure of power supply to the electric control device 22 of the pilot valve 21. However, the master control valve 15 will only be opened as a result of opening the pilot valve 21 when there is a power failure or when the switch 37 is intentionally opened.

The master control valve 15 of this Fig. 2 system differs from the master control valve of the Fig. 1 system by having added thereto a solenoid operated pilot valve which is generally designated by the reference character 38. This solenoid operated pilot valve includes a solenoid coil that is de-energized when its pilot valve is closed and is energized when its pilot valve is open. The circuit for the solenoid coil of the device 38 includes a wire 39 that extends from the main supply line 35 and a circuit wire 40 that extends to one terminal of the normally open switch 42. The second terminal 43 of this switch is connected to a wire 44 that extends to the second named supply line 36. The wire 40 has connected thereto a branch wire 45 which extends to the terminal 46 of the normally open switch 47. The second terminal 48 of this switch is connected by the wire 49 to the wire 44. It will be seen, therefore, that the solenoid coil of the pilot valve device 38 is normally de-energized but it will become energized when either one of the switches 42 or 47 is operated to close the circuit.

Each one of the selector valves 19 is provided with an operating lever 31 by means of which the valve is opened and closed. Operatively associated with each valve lever 31 is a cam 32 which functions to actuate its normally open switch 42 or 47. In Fig. 2 the selector valve operating levers 31 are illustrated in the positions they assume when the selector valves are closed. The cams 32, also, are illustrated in their normal positions that are assumed when the selector valves are closed. When either selector valve is opened by operation of this lever 31, the associated cam 32 will function to close its switch 42 or 47. When this selector valve is again closed, the associated switch will be opened. Therefore, the circuit to the solenoid operated pilot valve 38 of the master control valve 15 will be operated to open the master control valve when either pilot valve is opened and will be operated to close the master control valve when said pilot valve is again closed.

The detail features of construction of the various instrumentalities incorporated in the systems of Figs. 1 and 2 now will be described

Fig. 3 discloses the construction of the master control valve that is used in the Fig. 1 system. The discharge pipe 13 of the carbon dioxide storage tank 11 is suitably connected to the inlet 49 of the master control valve casing while the header 16 is suitably connected to the outlet 50 of this valve. The interior of the master control valve casing is provided with a partition 51 that separates the inlet 49 from the outlet 50. A flow opening 52 is formed in the partition 51 and this opening has threadedly mounted therein the valve seat 53. A valve 54 is positioned to engage the valve seat 53 through the medium of the seating disc or ring 55. This valve 54, of course, controls flow of the carbon dioxide from the inlet side 49 to the outlet side 50. The seating and unseating movements of the valve 54

are guided by the plunger 56 which is movably mounted in the cylinder 57. The valve 54 is normally loaded by means of the spring 58 so that the valve will engage the seating ring 53 when no force is present which will overcome the spring 58. Of course, the pressure of the carbon dioxide in the inlet 49 will be applied to the valve 54 and will cooperate with the loading spring 58 to move the valve 54 toward and hold it in engagement with its seating ring 53.

The master control valve casing portion 15a is suitably connected to the main portion of the valve casing. This casing portion is provided with a cylinder 59 in which is mounted the fluid pressure piston 60. A piston rod 61 extends through the piston 60 and is connected at its lower end to the valve rod 62. A bore 63 is formed in the piston rod 61 and communicates at its upper end with the fluid pressure chamber 64 through the medium of the plug 65 that is provided with a restricted aperture or opening. The piston rod bore 63 communicates at its lower end with a bore 66 that is formed in the valve rod 62. Lateral ports 67 communicate with the valve rod bore 66 to provide communication between this latter bore and the discharge side 50 of the partition 51. It will be seen, therefore, that the pressure chamber 64 is in open communication with the discharge side 50 of the master control valve and that the aperture or opening of the plug 65 controls the rate of flow of fluid from the pressure chamber to the discharge of the valve.

A by-pass duct 68 is illustrated as being formed in the walls of the main casing body and the pressure chamber casing portion 15a. This by-pass duct provides communication between the inlet side 49 of the master valve and a chamber 69 which is formed between the top 70 of the pressure chamber 64 and the end closure plate 71. This by-pass duct 68 and its communicating chamber 69 perform no function in this valve because the closure plug 72 prevents communication between the chamber 69 and the pressure chamber 64. In other words, when the master control valve 15 is used in the system of Fig. 1 the by-pass duct 68 is not in use. This duct, however, is used in the form of master control valve employed in the system of Fig. 2. Its function in this latter valve will be described at a later point.

Small portions of the control line 20 are illustrated in Fig. 3 as being connected to the storage tank discharge line 13 and to the pressure chamber 64 through the opening 73 that is formed in the side wall of the pressure casing portion 15a. This opening 73 is tapped at 74 for receiving the coupling member 75. When the pilot valve 21 is opened, carbon dioxide will flow through the control line 20 from the discharge pipe 13 of the storage tank into the pressure chamber 64 of the valve. The pressure of the carbon dioxide will build up in the chamber 64 and will be applied against the upper face of the piston 60. As the area of this piston face is greater than the exposed area of the valve 54, a differential pressure condition will be created which will cause the piston to force the valve 54 away from its seat. When the pilot valve 21 is closed, the carbon dioxide pressure developed in the chamber 64 will be dissipated through the orifice or opening of the plug 65, the piston rod bore 63, the valve rod bore 66 and the lateral ports 67 into the discharge side of the valve casing. Due to this drop in pressure in the chamber 64, the pressure of the spring 58 and

of the carbon dioxide applied to the valve 54 will function to close the valve. Due to the fact that the aperture or opening of the plug 65 is of considerably smaller diameter than the bore of the control line 20, the pressure will be maintained in the chamber 64 to hold the valve open as long as the pilot valve 21 is open.

Fig. 10 discloses the master control valve for the system of Fig. 2. This Fig. 10 master control valve differs from the Fig. 3 valve only by having the solenoid pilot valve device 38 associated therewith. Therefore, this solenoid pilot valve will be described in detail. Reference may be made to the detailed description of the remaining elements as applied to the Fig. 3 disclosure.

In the master control valve of Fig. 10 an apertured plug 76 is substituted for the closure plug 72 of Fig. 3. This apertured plug acts as a seat for the pilot valve 77 that is slidably mounted in the opening 78 formed in the cap 79. This cap is substituted for the closure cap 71 of the Fig. 3 valve. A pilot valve stem 80 connects the pilot valve 77 to the solenoid armature 81 that is operatively associated with the solenoid coil 82. The solenoid coil 82 is supplied with electricity through the circuit wires 33 and 34 in accordance with the description of the Fig. 2 system.

When the solenoid coil 82 is energized, the armature 81 is caused to move upwardly for unseating the pilot valve 77. This opening movement of the pilot valve permits the carbon dioxide to flow through the by-pass duct 68 into the chamber 69 and from this chamber through the aperture of the plug 76 into the pressure chamber 64 where it will be applied against the upper surface of the piston 60 for effecting opening movement of the valve 54. When the pilot valve 77 is closed, or seated against the plug 76, the carbon dioxide pressure developed in the chamber 64 will be dissipated through the bores of the piston rod 61 and valve rod 62 into the outlet 50 of the valve.

The pilot valve 21, for the control line 20, and the electrical control device 22 for the pilot valve are of the same construction in both of the systems of Figs. 1 and 2. These devices will be described in detail in connection with the disclosures of Figs. 4 to 7 inclusive.

The pilot valve 21 is provided with a main body portion 83 that has formed therein a chamber 84. The lower end of this chamber is closed by the cap 85. A valve seat 86 is formed on the inner end of this cap to cooperate with the valve body 87. A spring 88 is interposed between the inner end of the cap 85 and the valve 87 and normally functions to unseat the valve. The main pilot valve body 83 and the cap 85 are illustrated as being connected with the sections of the control pipe 20. When the valve 87 is engaging its seat 86 carbon dioxide will not be permitted to flow through the pilot valve. The valve body 87 is provided with a valve stem 89 which extends out of the chamber 84 and into the interior of the box 90 of the electric control device 22.

The end of the valve stem 89 is engaged by an adjustable set screw 91 which is carried by the main valve operating lever 93. This lever is disclosed in detail in Fig. 7. A threaded aperture 94 is provided in the lever to receive the set screw 91. One end of the lever is provided with an aperture 95 and a concentric socket 96. The remaining end portion of the lever is cut away at 97 to form the side shoulders 98.

Fig. 4 discloses the box 90 as having a cap screw 99 secured to its bottom wall and passing through the aperture 95 of the lever 93. The relative diameters of the aperture 95 and the cap screw 99 are such that the lever will be permitted to rock or pivot to a limited extent with respect to the screw. The socket 96 of the lever 93 is employed for receiving the lower end of the spring 100. An adjustable nut 101 is threaded on the upper end of the cap screw 99 and engages the upper end of the spring 100. By adjusting this nut 101 the force of the spring 100 applied to the associated end of the lever 93 may be varied. A stop 102 cooperates with the spring loaded end of the lever 93 to limit movement of the latter.

The shoulders 98 of the lever 93 are adapted to be engaged by the fingers 103 of the pair of parallel trip levers 104 which are shown in the assembly views of Figs. 4 and 5 while one of these levers is illustrated in detail in Fig. 6. These parallel trip levers 104 are pivotally connected at their lower ends 105 to the mounting block 106 by the pin 107. Notches 108 are formed in the upper ends of these trip levers 104 to receive the transverse pin 109 carried by the projecting end of the solenoid armature 110. This armature is associated with the laminated core 111 of the solenoid coil 112. Two different sets of reference characters are applied to the circuit wires for the solenoid coil in Figs. 1 and 2. To avoid confusion, the reference characters 25 and 26 applied to the circuit wires in Fig. 1 will be employed in Fig. 4.

As long as the solenoid coil 112 is energized, its armature 110 will occupy the position illustrated in Fig. 4. When in this position, the armature will hold the pair of trip levers 104 in the position illustrated in Figs. 4 and 5 so that their fingers 103 will engage the shoulders 98 of the main valve operating lever 93. The trip levers 104 then will hold down one end of the main valve lever 93 while the other end of this lever is being held down by the spring 100. With the lever 93 retained in the position illustrated in Figs. 4 and 5, the set screw 91 will engage the upper end of the pilot valve stem 89 for holding the pilot valve body 88 against its seat 86. When the solenoid coil 112 is de-energized, by interruption of the flow of current through the wires 25 and 26, the solenoid armature 110 will be permitted to move outwardly. This outward movement of the armature 110 will cause the trip levers 104 to pivot about their pin 107 for moving their fingers 103 out of engagement with the shoulders 98 of the valve lever 93. Release of this lever 93 at one end will permit the pressure of the carbon dioxide in the cap bore 113 and the spring 88 to move the pilot valve body 87 away from its seat 86. Carbon dioxide then will flow through the pilot valve 21 and its associated control pipe sections 29 for supplying the master control valve with the desired valve opening fluid pressure.

It was pointed out above that the electric control device 22 must be manually reset after it had functioned to effect opening of the pilot valve 21. To manually reset this device, the box 90 is provided with a removable cover plate 113 which, when removed, exposes an opening 114. An attendant may gain access to the interior of the box 90 by removing the cover 113 and he may then depress the lever 93 so that its shoulders 98 may again be engaged by the fingers 103 of the pair of trip levers 104.

The selector valves 19 for both of the systems of Figs. 1 and 2 may be of the same construction and of any desired design. A manually operable gate valve has been selected to illustrate the principle of the selector valves. One such gate valve is illustrated in Fig. 8. This valve includes the body 115 which is adapted to be connected to one section of a branch line 17. A nut 116 is threaded in the opening 117 of the body 115 and functions as the coupling for the second section of the branch line 17. This nut 116 also functions to provide a seat 118 for the valve disc 119 to engage. The disc 119 is associated with the disc carrier 120 in the conventional manner. A rotatable stem 121 has the disc carrier 120 attached to its inner end. This stem extends through the bushing assembly 122 and has the operating handle 31 suitably attached to its projecting end. This handle is secured in place by means of the stem nut 124.

In the descriptions of the systems of Figs. 1 and 2 each selector valve 19 is described as having associated therewith a cam 32 that functions to operate a circuit controlling switch. The switch of the system of Fig. 1 is normally conditioned to close its circuit when the valve is closed and the cam 32 of the valve functions to operate the switch to break its circuit when the valve is manually moved to its open position. In the system of Fig. 2 the switches are normally conditioned to break or open their circuits and the cams 32 function to actuate the switches to close their circuits when the associated selector valves are opened. There are numerous makes of plunger type limit switches available on the open market which can be employed in connection with the selector valves of the systems of Figs. 1 and 2. These switches may be either of the single pole or double pole types which are normally either open or closed. When they are normally closed depression of their operating push rod or button results in opening the circuit through the switch. When the switches are normally open, depression of the push rod or button results in closing the circuit. The normally open and normally closed switches of a given manufacturer have the same exterior appearance and for that reason the disclosure of the switch 125 in Fig. 8 will suffice for the switches 27—29 of Fig. 1 and 42—47 of Fig. 2.

This switch 125 may be supported by the straps 126 which are clamped to one section of the associated branch line 17. The push rod or button 127 of this switch is illustrated in full lines in Fig. 8 in its normal, extended position. Depression of this push rod or button 127 will cause the switch 125 to break its circuit if the switch is in use in the Fig. 1 system. Depression of the push rod or button 127 will bring about closing of the circuit through the switch 125 if the switch is employed in the system of Fig. 2. The cam 32 includes a mounting disc 128 employed for connecting the cam to and mounting it on the valve stem 121. The valve handle attaching nut 124 also functions to secure the cam mounting disc 128 on the valve stem. This disc carries a cam element 129 which is illustrated in Figs. 8 and 9 in full lines and in dotted lines. The full line position corresponds with the closed position of the valve disc 119 and its carrier 120. When the cam 129 is in this full line position it is spaced from the switch push rod or button 127. When the valve handle 31 is operated to open the selector valve 19, the cam 32 is moved to cause its cam element 129 to engage and depress the switch push rod or button 127. The dotted line positions of the cam 129 in Figs. 8 and 9 is assumed when

the element has functioned to depress the push rod or button 127 of the switch 125. When the valve operating handle 31 is returned to its normal position, for closing the selector valve 19, the cam element 129 again assumes its full line position of Figs. 8 and 9 and the push rod or button 127 of the switch 125 will again assume its projected or full line position if it is not restrained in any way.

Fig. 8 discloses a push rod retaining latch 130 which is pivotally mounted on the casing of the switch 125 by means of the hinge structure 131. This latch is normally loaded by the spring 132 which functions to urge the latch from its full line position to its dotted line position. An operating handle 133 is attached to the latch 130 and is used to elevate the latch from its dotted line position into its full line position against the force of the spring 132.

By inspecting Fig. 8 it will be seen that the latch 130 occupies full line position when the switch push rod or button 127 is in its projected or normal position. When the push rod or button 127 is depressed by the cam element 129, the spring 132 causes the latch 130 to move downwardly so that the extremity 130a of the latch will overlie the outer face of the push rod or button 127. This latch will then function to hold the switch push rod or button 127 in its retracted or depressed position for maintaining the switch 125 in its abnormal condition.

This latch 130 is optional equipment. When it is employed it will function to hold the switch 125 in its abnormal condition after the associated pilot valve has been manually closed. Of course, whenever the latch 130 is elevated into its full line position the switch push rod or button 127 will be permitted to move outwardly into its normal position. Therefore, the latch may be elevated prior to manually closing the pilot valve 19 so that the switch will respond to the operation of the valve or the latch 130 may be elevated at any time after the pilot valve has been closed. The switch 125 then would be returned to its normal condition independently of closing of its pilot valve.

It will be appreciated from the above descriptions of the two systems of Figs. 1 and 2 and the instrumentalities that are incorporated therein that discharge of the fire extinguishing carbon dioxide at any hazard may be accomplished by manually opening the selector valve 19 which is operatively associated with the involved hazard. This manual opening of the selector valve will bring about opening of the master control valve. In the system of Fig. 1 closing of the selector valve will not bring about closing of the master control valve because the electric control device 22 for the pilot valve 21 must be manually reset. In the system of Fig. 2, however, the master control valve 15 will be opened and closed in response to opening and closing operations of either one of the selector valves of this system. This is due to the fact that the switches for the selector valves control the circuit to the solenoid operated pilot valve device 38 of the master control valve 15 and this solenoid operated pilot valve is automatically opened and closed in response to energization and de-energization of its solenoid coil. In the Fig. 2 system the pilot valve 21 and its electric control device 22 only function in case of power failure and do not function in response to manual operation of the selector valves.

It is to be understood that the forms of this invention herewith shown and described are to be taken as preferred examples of the same, and that various changes in the shape, size, and arrangement of parts may be resorted to without departing from the spirit of the invention or the scope of the subjoined claims.

Having thus described the invention, I claim:

1. A fire extinguishing system for protecting a plurality of separate hazards, comprising a storage tank for supplying liquid carbon dioxide, a discharge pipe extending from the tank, a master valve for controlling the flow of carbon dioxide through the discharge pipe, a header connected to the outlet of the master valve, a separate branch pipe line extending to each hazard from the header, a solely manually operable selector valve for controlling each branch pipe line, normally deenergized electrically controlled means operable in response to manual opening operation of any selector valve for effecting opening operation of the master valve, and additional normally energized electrically controlled means for effecting opening operation of the master valve and for causing said master valve to remain open in the event of failure of the supply of electricity for the normally de-energized electrically controlled means.

2. A fire extinguishing system for protecting a plurality of separate hazards, comprising a storage tank for supplying liquid carbon dioxide, a discharge pipe extending from the tank, a master valve for controlling the flow of carbon dioxide through the discharge pipe, a header connected to the outlet of the master valve, a separate branch pipe line extending to each hazard from the header, a selector valve for controlling each branch pipe line, means for manually opening and closing each selector valve, electrical means for effecting opening and closing operations of the master valve, a circuit for said electrical means, and circuit controlling means operatively associated with and operated by each selector valve manual opening and closing means for effecting operation of the electrical means to open and close the master valve when any selector valve is opened and closed.

3. A fire extinguishing system for protecting a plurality of separate hazards, comprising a storage tank for supplying liquid carbon dioxide, a discharge pipe extending from the tank, a master valve for controlling the flow of carbon dioxide through the discharge pipe, differential fluid pressure means for effecting opening operation of said master valve, a pilot valve for controlling the application of the differential fluid pressure to said means, a header connected to the outlet of the master valve, a separate branch pipe line extending to each hazard from the header, a selector valve for controlling each branch pipe line, means for manually opening each selector valve, and means operable in response to opening operation of the manual opening means of any selector valve for effecting operation of the pilot valve to cause the master valve to be opened.

4. A fire extinguishing system for protecting a plurality of separate hazards, comprising a storage tank for supplying liquid carbon dioxide, a discharge pipe extending from the tank, a master valve for controlling the flow of carbon dioxide through the discharge pipe, differential fluid pressure means for effecting opening and closing operations of said master valve, a pilot valve for controlling the application of the differential fluid pressure to said means, a header connected to the outlet of the master valve, a separate branch pipe line extending to each haz-

ard from the header, a selector valve for controlling each branch pipe line, means for manually operating each selector valve, and means operable in response to opening and closing operations of the manual operating means of any selector valve for causing operation of the pilot valve to effect opening and closing operations of the master valve.

5. A fire extinguishing system for protecting a plurality of separate hazards, comprising a storage tank for supplying liquid carbon dioxide, a discharge pipe extending from the tank, a master valve for controlling the flow of carbon dioxide through the discharge pipe, differential fluid pressure means for effecting opening operation of said master valve, a pilot valve for controlling the application of the differential fluid pressure to said means, electrical means for operating the pilot valve, a circuit for said electrical means, a header connected to the outlet of the master valve, a separate branch pipe line extending to each hazard from the header, a selector valve for controlling each branch pipe line, means for manually opening each selector valve, and circuit controlling means operated by the manual opening means of each selector valve for effecting operation of the electrical means for the pilot valve to cause the pilot valve to be operated to open the master valve when any selector valve is opened.

6. A fire extinguishing system for protecting a plurality of separate hazards, comprising a storage tank for supplying liquid carbon dioxide, a discharge pipe extending from the tank, a master valve for controlling the flow of carbon dioxide through the discharge pipe, differential fluid pressure means for effecting opening and closing operations of said master valve, a pilot valve for controlling the application of the differential fluid pressure to said means, electrical means for operating the pilot valve, a circuit for said electrical means, a header connected to the outlet of the master valve, a separate branch pipe line extending to each hazard from the header, a selector valve for controlling each branch pipe line, means for manually operating each selector valve, and circuit controlling means operated by the manual operating means of each selector valve for effecting operation of the electrical means for the pilot valve to cause the pilot valve to be operated to open and close the master valve when any selector valve is opened and closed.

7. A fire extinguishing system for protecting a plurality of separate hazards, comprising a storage tank for supplying liquid carbon dioxide, a discharge pipe extending from the tank, a master valve for controlling the flow of carbon dioxide through the discharge pipe, a header connected to the outlet of the master valve, a separate branch pipe line extending to each hazard from the header, a selector valve for controlling each branch pipe line, means for manually operating each selector valve, electrical means for maintaining the master valve closed when energized and for effecting opening operation of the master valve when de-energized, a normally closed circuit for the electrical means, and circuit opening means directly operated by the manual operating means of each selector valve for opening the circuit to the electrical means when any selector valve is opened, said electrical means being operable independently of said circuit opening means for all of the selector valves to effect opening operation of the master valve automatically in the event of failure of the supply of current thereto.

8. A fire extinguishing system for protecting a plurality of separate hazards, comprising a storage tank for supplying liquid carbon dioxide, a discharge pipe extending from the tank, a master valve for controlling the flow of carbon dioxide through the discharge pipe, a header connected to the outlet of the master valve, a separate branch pipe line extending to each hazard from the header, a solely manually operable selector valve for controlling each branch pipe line, normally de-energized electrical means for effecting opening operation of the master valve, a circuit for said electrical means, circuit closing means operatively associated with each selector valve for effecting energization of the said electrical means to open the master valve when any selector valve is manually opened, and normally energized electrical means for effecting opening operation of the master valve in the event of failure of current supply thereto.

9. A fire extinguishing system for protecting a plurality of separate hazards, comprising a source of supply of liquid carbon dioxide, piping extending from said source of supply to each one of the separate hazards and including a separate branch line for each hazard and a header common to all of the branch lines, a master valve for controlling the flow of carbon dioxide from said source of supply to the header, fluid pressure actuated means for effecting opening and closing operations of the master valve, electric current actuated means for controlling the application of fluid pressure to the first mentioned means, a circuit for said electrical means, a selector valve for controlling each branch line, separate means for directly manually opening and closing each selector valve, and separate electrical current flow controlling means at each selector valve actuated by the means for manually opening and closing said selector valve and connected in the said circuit for the electrical means to cause the master valve to be opened and closed each time any selector valve is opened and closed.

CHARLES A. GETZ.

REFERENCES CITED

The following references are of record in the file of this patent:

UNITED STATES PATENTS

Number	Name	Date
461,089	Wolstencroft et al.	Oct. 13, 1891
777,888	Fiddes	Dec. 20, 1904
1,768,739	Boyd	July 1, 1930
1,912,458	Mapes	June 6, 1933
1,923,160	McLaren	Aug. 22, 1933
1,968,086	Mapes	July 31, 1934
2,023,569	Allen et al.	Dec. 10, 1935
2,240,079	Roth	Apr. 29, 1941
2,291,101	Papulski	July 28, 1942
2,307,784	Mapes	Jan. 12, 1943