PCT WORLD INTELLECTUAL PROPERTY ORGANIZATION
International Bureau

INTERNATIONAL APPLICATION PUBLISHED UNDER THE PATENT COOPERATION TREATY (PCT)

(51) International Patent Classification 3 :		(11) International Publication Number:
C01F 5/06; C04B 3/00	A1	WO 84/ 03490
		(43) International Publication Date: 13 September 1984 (13.09.84)

(21) International Application Number: PCT/AU84/00036

(22) International Filing Date: 7 March 1984 (07.03.84)

(31) Priority Application Number: PF 8329/83

(32) Priority Date: 7 March 1983 (07.03.83)

(33) Priority Country: AU

(71) Applicant *(for all designated States except US)*: COMMONWEALTH SCIENTIFIC AND INDUSTRIAL RESEARCH ORGANIZATION [AU/AU]; Limestone Avenue, Campbell, ACT (AU).

(72) Inventor; and
(75) Inventor/Applicant *(for US only)* : CANTERFORD, John, Harmsworth [AU/AU]; 31 Glenwood Drive, Croydon, VIC 3136 (AU).

(74) Agents: CORBETT, Terence, Guy et al.; Davies & Collison, 1 Little Collins Street, Melbourne, VIC 3000 (AU).

(81) Designated States: AT (European patent), AU, DE (European patent), FR (European patent), JP, US.

Published
With international search report.

(54) Title: MAGNESIUM OXIDE PRODUCTION

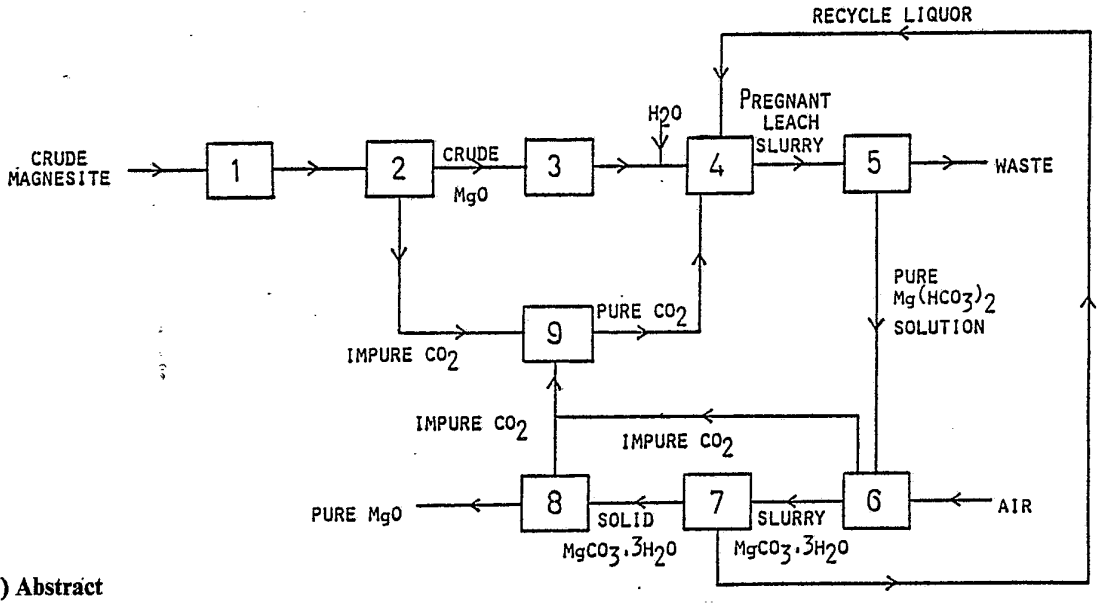

(57) Abstract

A process for preparing substantially pure magnesium oxide from crude magnesium-containing compounds which have an iron impurity sufficiently low to be removable by selection of the process conditions, characterised in that the process comprises calcining the crude magnesium-containing compounds to crude magnesium oxide, forming a slurry of the crude magnesium oxide and treating the slurry with carbon dioxide to convert at least part of the magnesium content of the slurry into magnesium bicarbonate, said treatment being carried out at a temperature of from 25-50°C, and at a pulp density selected to permit maximum magnesium extraction with minimum iron extraction, removing the unreacted solid from the magnesium bicarbonate solution so produced, air sparging and/or heating the solution after clarification to produce a precipitate of hydrated magnesium carbonate and/or basic magnesium carbonate, separating the precipitate and decomposing it to produce substantially pure magnesium oxide.

FOR THE PURPOSES OF INFORMATION ONLY

Codes used to identify States party to the PCT on the front pages of pamphlets publishing international applications under the PCT.

AT	Austria	**KR**	Republic of Corea
AU	Australia	**LI**	Liechtenstein
BE	Belgium	**LK**	Sri Lanka
BG	Bulgaria	**LU**	Luxembourg
BR	Brazil	**MC**	Monaco
CF	Central African Republic	**MG**	Madagascar
CG	Congo	**MR**	Mauritania
CH	Switzerland	**MW**	Malawi
CM	Cameroon	**NL**	Netherlands
DE	Germany, Federal Republic of	**NO**	Norway
DK	Denmark	**RO**	Romania
FI	Finland	**SD**	Sudan
FR	France	**SE**	Sweden
GA	Gabon	**SN**	Senegal
GB	United Kingdom	**SU**	Soviet Union
HU	Hungary	**TD**	Chad
JP	Japan	**TG**	Togo
KP	Democratic People's Republic of Korea	**US**	United States of America

"MAGNESIUM OXIDE PRODUCTION"

This invention relates to a method for producing high grade magnesium oxide (magnesia) from crude magnesium-containing compounds, such as magnesium hydroxide, magnesium carbonate and basic magnesium carbonate, which have an iron impurity and can be thermally decomposed (calcined) to crude magnesium oxide.

Many processes are known for producing magnesium oxide from magnesium-containing compounds. For instance, U.S. Patent 2,390,095 discloses a process in which a magnesium-containing compound such as dolomite is calcined and mixed with water to form a slurry. The slurry is then carbonated by contact with carbon dioxide gas, under such conditions that the magnesium content is converted to magnesium bicarbonate, without intermediate formation of solid phase neutral magnesium carbonate. After removing the magnesium bicarbonate solution from the other solid phase materials, the solution is aerated to remove a certain amount of carbon dioxide, and to thereby convert a substantial part but not all of the magnesium

BUREAU OMPI WIPO INTERNATIONAL

bicarbonate to relatively insoluble neutral magnesium carbonate. The solid phase neutral magnesium carbonate is separated from the remaining solution and heated to form magnesium oxide, while the mother liquor is returned back to the process. A very similar process but which does not involve aeration, is the subject of U.S. Patent 3,320,029. In both U.S. Patent 2,390,095 and 3,320,029 carbon dioxide leaching of the crude calcine is carried out in the temperature range of 15-25°C.

A major problem associated with these types of processes is that they are not suitable for producing high grade magnesia when the feedstock has an iron impurity as they do not provide a specific step for effectively removing iron. Using the leaching conditions, particularly the leaching temperature of 15-25°C, specified in U.S. Patents 2,390,095 and 3,320,029, feedstocks that contain iron will yield magnesium bicarbonate solutions that also contain soluble iron. If this soluble iron is not removed before precipitation of all or part of the soluble magnesium as hydrated magnesium carbonate and/or basic magnesium carbonate, then these intermediate products, which are calcined to the final product, magnesium oxide, will be contaminated by an excessive amount of iron, that is, 0.02% Fe_2O_3 or higher. Thus, the final product will also be contaminated by an excessive amount of iron.

Until now, the only adequate means for removing iron contamination was by the process disclosed in Australian patent specification no. 85810/82. In this process, which is a modification of the aforementioned processes of the U.S. patents, a water-soluble

BUREAU OMPI WIPO INTERNATIONAL

aluminium salt was employed to precipitate out the iron impurity. The Australian process broadly comprises the steps of calcining crude magnesium-containing compounds to crude magnesium oxide, forming a slurry of the crude magnesium oxide and reacting the slurry with carbon dioxide, removing the unreacted solid from the iron-containing pregnant magnesium bicarbonate solution so produced and adding a water-soluble aluminium salt to the pregnant solution to precipitate out the iron, air sparging and/or heating the solution after clarification to produce a precipitate of hydrated magnesium carbonate and/or basic magnesium carbonate, separating the precipitate and decomposing it to produce substantially pure magnesium oxide.

It has now been found that, for crude magnesium-containing compounds with a sufficiently low iron content, for instance, less than about 5% Fe_2O_3 in the case of magnesite ores, the process disclosed in the Australian patent specification may be basically followed without the iron-removal step using a water-soluble aluminium salt. Instead, the iron level in the leach liquor can be adequately controlled by proper selection of the leaching conditions.

The present invention is based upon the discovery that the amount of iron that is dissolved from a crude iron-containing calcine, derived from iron-containing magnesite, when slurried in water and contacted with carbon dioxide, is markedly affected by the leaching temperature. In essence, the amount of soluble iron decreases as the leaching temperature is increased. This discovery is not disclosed in U.S. Patents 2,390,095 and 3,320,029, and it could not be deduced

BUREAU OMPI WIPO INTERNATIONAL

from the information disclosed in these U.S. patents.

In order to produce a final magnesium oxide product with an acceptably low iron content, say less than 0.1% Fe_2O_3, the magnesium bicarbonate solution derived from the crude iron-containing calcine should contain a maximum of 0.010 g/l iron per 10 g/l magnesium. If a final product with a lower iron content is required, then obviously the iron content of the magnesium bicarbonate solution must be reduced accordingly.

Accordingly, in its broadest aspect, the present invention provides a process for preparing substantially pure magnesium oxide from crude magnesium-containing compounds which have an iron impurity sufficiently low to be removable by selection of the leaching conditions, which method comprises calcining the crude magnesium-containing compounds to crude magnesium oxide, forming a slurry of the crude magnesium oxide and leaching the slurry by treatment with carbon dioxide at a temperature within the range of 25-50°C, preferably 35-45°C, and at a pulp density selected to permit maximum magnesium extraction with minimum iron extraction, removing the unreacted solid from the magnesium bicarbonate solution so produced, air sparging and/or heating the solution after clarification to produce a precipitate of hydrated magnesium carbonate and/or basic magnesium carbonate, separating the precipitate and decomposing it to produce substantially pure magnesium oxide.

The pulp density should be selected so as to substantially avoid precipitation of intermediate magnesium compounds and will normally lie in the range of 2 to 3 (expressed as % solids).

BUREAU OMPI WIPO INTERNATIONAL

The calcining of the crude magnesium-containing compounds having the iron impurity may be effected by heating the crude magnesium-containing compounds to a temperature and for a time such that from 85% to 95% by weight of the magnesium present in the crude magnesium-containing compounds is transformed into crude magnesium oxide with a high surface area.

Generally, the slurry of crude magnesium oxide is reacted with the carbon dioxide at a temperature within the range of 35°C to 45°C using a slurry agitation rate and reaction time sufficient to ensure that more than 95% of the magnesium present as magnesium oxide has reacted to form soluble magnesium bicarbonate. Preferably, the crude magnesium oxide is dry ground (e.g. to such a size that 100% passes through a 400 micron mesh and 80% passes through a 150 micron mesh) prior to slurrying with water and the pulp density is adjusted to a value in the range of 2% to 3% solids with recycle liquor having a magnesium content of less than 0.5 g/l and preferably less than 0.2 g/l. The reaction with carbon dioxide may be effected at a partial pressure within the range of 175 kPa to 700 kPa, the time taken between the formation of the slurry and the contact of the latter with the carbon dioxide being less than 0.5 hour.

The process may be carried out in such a manner that the carbon dioxide evolved during any of the process steps is recovered, purified, compressed and recycled to the leaching circuit.

The process of the present invention enables substantially all of the iron contained in a low-iron crude magnesium containing compound such as magnesite to be removed, thereby to produce a low-iron magnesia

BUREAU OMPI WIPO INTERNATIONAL

product which is suitable for use in making furnace bricks as well as numerous other applications. To date, there has been no process which solves or discusses the iron-removal problem other than the aforementioned Australian application and such a process is not predictable from the known chemistry of the system.

Preferred embodiments of the invention will now be described with reference to the accompanying drawing which is a flow chart illustrating the process steps of the invention.

Crude magnesite ore is fed to a crushing circuit (1) whereby the particle size of the crude magnesite is reduced to a size suitable for thermal decomposition (calcination). The optimum particle size of the crushed crude magnesite depends upon the type of equipment used for thermal decomposition (calcination) and will normally be less than 4 inches and preferably less than 1 inch.

The crushed crude magnesite ore is now thermally decomposed (calcined) in, for example a rotary kiln (2). Fuel, in the form of fuel oil or LPG plus excess air are used to fire the rotary kiln or alternative thermal decomposition (calcination) furnace (2). The off-gases, containing impure carbon dioxide formed by the thermal decomposition of the crude magnesite, are collected, purified and the carbon dioxide content compressed by standard techniques (9).

The temperature and time of calcination are controlled by the composition of the feed material. Calcination should be carried out at as low a temperature and for as short a time as is consistent with the optimum decomposition of the crude magnesite

BUREAU OMPI WIPO INTERNATIONAL

to crude magnesium oxide, the latter having as high a surface area as possible. For crude magnesite, that is ore with a magnesite content of about 70% or more, optimum calcination conditions are of the order of 700°C for one hour, the actual time depending to some extent on the particle size of the feed material. The calcination conditions should be such that about 90% of the crude magnesite has been thermally decomposed to crude magnesium oxide. Calcination at a lower temperature or for a substantially shorter time results in a reduced amount of crude magnesite that has been thermally decomposed to crude magnesium oxide. Calcination at higher temperatures or for substantially longer times results in over calcination; in particular the surface area of the crude magnesium oxide is substantially reduced such that it reacts very slowly with carbon dioxide when it is slurried with water and contacted with the carbon dioxide.

The hot, crude magnesium oxide from the calcination circuit (2) is allowed to cool to room temperature and then passed to a grinding circuit (3) where its particle size is reduced by dry grinding to a size suitable for leaching, preferably 100% passing through a 400 micron mesh and 80% passing through a 150 micron mesh. Grinding must be carried out in the dry state since if wet grinding is carried out, there is a reaction between the crude magnesium oxide and the water (slaking) which affects the amount of iron dissolved in the subsequent leaching stage (4).

The ground crude magnesium oxide is slurried with water just before it is introduced into the leaching circuit (4). The slaking reaction between the crude

BUREAU OMPI WIPO INTERNATIONAL

magnesium oxide and the water is exothermic, that is, it generates heat. The amount of iron that is dissolved in the subsequent leaching step is affected by the temperature of the slurry and the time before it is contacted with the carbon dioxide. An increase in the slurrying time and an increase in the slurry temperature both lead to an increase in the amount of iron dissolved in the leaching step. Preferably, the slurry temperature should be maintained at the leaching temperature, that is, in the range 25°C to 50°C, preferably 35°C to 45°C, while the slurrying time should be kept below 30 minutes.

Leaching is carried out in a closed reaction vessel (4) with suitable inlets for feed slurry, water (make-up and/or recycle-liquor) and carbon dioxide. Suitable outlets for sampling and slurry discharge are also necessary. The reaction vessel is fitted with a suitable agitation system and baffled so that there is adequate mixing and dispersion of the carbon dioxide throughout the slurry.

Leaching conditions (time, temperature, carbon dioxide partial pressure, pulp density and initial leachant composition) are controlled by the solubility of magnesium bicarbonate, the product of the reaction between the slurry of crude magnesium oxide and the carbon dioxide. The amount of iron that is simultaneously dissolved is also affected by the leaching conditions, particularly the temperature (which must be in the range of 25-50°C), pulp density (which is generally about 2-3% in order to prevent precipitation of intermediate magnesium compounds) and the initial leachant composition.

BUREAU OMPI WIPO INTERNATIONAL

Since the solubility of magnesium bicarbonate increases with decreasing temperature, it may be considered preferable to leach at as low a temperature and at as high a pulp density as possible, say of the order of 5°C and 5% solids respectively. However, the amount of iron that is dissolved under these conditions is excessive. The amount of iron that is dissolved decreases as the leaching temperature and pulp density are increased and decreased respectively. Hence, preferred leaching temperatures and pulp densities have been found to lie in the range of 35°C to 45°C and 2%-3% solids. The preferred pulp density should be such that the solubility limit of the magnesium bicarbonate, formed by the interaction of the magnesium oxide with the carbon dioxide, is not exceeded at the operating carbon dioxide partial pressure and leaching temperature.

The preferred leaching time is such that greater than 95% of the available magnesium, present as magnesium oxide, reacts to form soluble magnesium bicarbonate. The preferred leaching time depends upon the leaching temperature, carbon dioxide partial pressure, pulp density and agitation rate and also on the calcination conditions used to thermally decompose the crude magnesite to crude magnesium oxide. The preferred leaching time should be less than two hours and preferably less than one hour.

The preferred carbon dioxide partial pressure, which is dependent upon the leaching temperature, should be as low as practical so as to avoid the use of expensive and complex high pressure reaction vessels (autoclaves). The preferred carbon dioxide partial pressure is in the range 175 kPa to 700 kPa.

BUREAU OMPI WIPO INTERNATIONAL

It is normal hydrometallurgical practice to recycle liquor which has been treated to recover the desired product(s) and to remove undesirable impurities, back to the leaching circuit. In this way the amount of make-up process water that is required is substantially reduced. In the calcination-carbon dioxide leach process, the filtrate obtained after separation of solid hydrated magnesium carbonate from the slurry of hydrated magnesium carbonate (7) is used to adjust the pulp density of the slurry of crude magnesium oxide being introduced into the leaching circuit (4). The filtrate is termed the recycle liquor in Figure 1.

Removal of unreacted solid, which includes the iron oxide, is carried out by pressure filtration using carbon dioxide as the pressurizing atmosphere (5). The substantially iron-free magnesium bicarbonate solution issuing from the pressure filtration circuit is fed to a precipitation vessel (6) where the magnesium is precipitated by air injection (sparging) and/or heating such that the carbon dioxide content of the iron-free magnesium bicarbonate solution, in the form of dissolved carbon dioxide and/or as the carbonate anion and/or as the bicarbonate anion, is rapidly reduced so that hydrated magnesium carbonate (nesquehonite, $MgCO_3.3H_2O$) and/or basic magnesium carbonate (hydromagnesite, $Mg_5(CO_3)_4(OH)_2.4H_2O$) is precipitated. The rate at which the magnesium is precipitated depends upon the temperature of the pure magnesium bicarbonate solution and the rate of air injection. The rate of precipitation is increased by increasing the solution temperature and by increasing the rate of air

BUREAU OMPI WIPO INTERNATIONAL

injection. The temperature of precipitation and rate of air injection should be such that the magnesium content of the resultant slurry solution is reduced to less than 0.5 g/l and preferably less than 0.2 g/l within 1 hour to 2 hours.

The rate of air injection should not be too high since the carbon dioxide evolved during precipitation must be collected, purified and compressed (9) before being utilized in the leaching circuit (4). If the rate of air injection during precipitation (6) is too high, the carbon dioxide will be excessively diluted with air, leading to complications with the collection, purification and compression circuit (9).

The temperature at which precipitation takes place (6) should not be too high since the bulk density of the precipitate formed decreases with increasing precipitation temperature. The precipitated hydrated magnesium carbonate (nesquehonite) and/or basic magnesium carbonate (hydromagnesite) and the magnesium oxide derived from it should have as high a bulk density as possible. The preferred precipitation conditions (6) are in the ranges of 20°C to 45°C and 1 hour to 2 hours respectively.

The slurry of precipitated hydrated magnesium carbonate and/or basic magnesium carbonate (only the former is indicated in the Figure) is transferred to a conventional solid/liquid separation circuit (7) where the solid hydrated magnesium carbonate and/or basic magnesium carbonate is separated from the solution. Counter-current decantation and rotary vacuum filtration are suitable techniques for carrying out this solid/liquid separation. The separated solution,

BUREAU OMPI WIPO INTERNATIONAL

which contains 0.0 g/l to 0.5 g/l magnesium and preferably 0.0 g/l to 0.2 g/l magnesium, forms the recycle liquor to the leaching circuit (4).

The solid hydrated magnesium carbonate and/or basic magnesium carbonate is transferred to a suitable furnace (8) where it is thermally decomposed (calcined) to magnesium oxide, water vapour and carbon dioxide. Evolution of water vapour and of carbon dioxide may be carried out in two essentially separate stages, so that carbon dioxide recovery is more readily performed.

The water vapour is removed from the off-gases, and after purification and compression (9), the carbon dioxide is returned to the leaching circuit (4). The optimum calcination temperature is in excess of 600°C, that is, above the decomposition temperature of the hydrated magnesium carbonate and/or basic magnesium carbonate. Subsequent heating so as to ensure that the product has a suitably high bulk density for furnace brick manufacture usually requires calcination in the range 1600°C to 1800°C, with or without intermediate briquetting or pressing of the magnesium oxide produced at 600°C.

The following example is provided to illustrate the features of the invention. The example in no way limits the purpose of the invention.

EXAMPLE 1

This example demonstrates how the iron content of the magnesium bicarbonate solution decreases with increasing leaching temperature.

BUREAU OMPI WIPO INTERNATIONAL

A calcine (crude magnesium oxide) containing 39.1% magnesium, was produced from crude magnesite by calcination at 700°C. The calcine was dry ground to 100% passing through a 150µm mesh and then slurried with magnesium- and iron-free water in an autoclave. The slurry was slaked for 0.5 hour at the stated leaching temperature (see Table below) and then subjected to a carbon dioxide partial pressure of 700 kPa for one hour. The autoclave agitator was rotated at 1200 rpm to maintain adequate dispersion of the carbon dioxide throughout the slurry.

TABLE

Leach temp. (°C)	Pulp density (% solids)	Leach liquor (g/l)		Mg extraction (%)
		Mg	Fe	
15.5	2	6.18	0.013	79
35.0	2	6.16	0.008	79
45.0	2	6.19	0.001	80
15.5	3	9.60	0.095	82
35.0	3	9.45	0.020	81
45.0	3	9.57	0.016	81
15.5	4	12.60	0.247	81
35.0	4	11.73	0.114	75
45.0	4	8.03	0.008	51

The test data in the table show that the magnesium bicarbonate solution has a lower iron content as the leaching temperature is increased. It can be seen that at a leaching temperature of 15.5°C there is excessive iron dissolution so that the magnesium bicarbonate solution contains too high an iron concentration to meet final product

BUREAU OMPI WIPO INTERNATIONAL

specifications. On the other hand, product specification will be met if the leaching temperature is in the 35-45°C range using the appropriate pulp density.

BUREAU OMPI WIPO INTERNATIONAL

CLAIMS:

1. A process for preparing substantially pure magnesium oxide from crude magnesium-containing compounds which have an iron impurity sufficiently low to be removable by selection of the process conditions, characterised in that the process comprises calcining the crude magnesium-containing compounds to crude magnesium oxide, forming a slurry of the crude magnesium oxide and treating the slurry with carbon dioxide to convert at least part of the magnesium content of the slurry into magnesium bicarbonate, said treatment being carried out at a temperature of from 25-50°C, and at a pulp density selected to permit maximum magnesium extraction with minimum iron extraction, removing the unreacted solid from the magnesium bicarbonate solution so produced, air sparging and/or heating the solution after clarification to produce a precipitate of hydrated magnesium carbonate and/or basic magnesium carbonate, separating the precipitate and decomposing it to produce substantially pure magnesium oxide.

2. A process as claimed in Claim 1, characterised in that the carbon dioxide treatment is carried out at a temperature of from 35° to 45°C, using a slurry agitation rate and reaction time sufficient to ensure that more than 95% of the magnesium present as magnesium oxide has reacted to form soluble magnesium bicarbonate.

BUREAU OMPI WIPO INTERNATIONAL

3. A process as claimed in Claim 1 or Claim 2, characterised in that the pulp density is from 2 to 3% solids by weight.

4. A process as claimed in any one of Claims 1 to 3, characterised in that calcination is effected by heating the crude magnesium-containing compounds to a temperature and for a time such that from 85% to 95% by weight of the magnesium present in the crude magnesium-containing compounds are transformed into crude magnesium oxide with a high surface area.

5. A process as claimed in any one of Claims 1 to 5, characterised in that the crude magnesium oxide is dry ground prior to slurrying with water.

6. A process as claimed in Claim 5, characterised in that the crude magnesium oxide is dry ground to such a size that 100% passes through a 400 micron mesh and 80% passes through a 150 micron mesh.

7. A process as claimed in any one of the preceding claims, characterised in that the pulp density is adjusted to the required value using recycle liquor from the process having a magnesium content of less than 0.5 g/l and preferably less than 0.2 g/l.

8. A process as claimed in any one of the preceding claims characterised in that the reaction of the slurry with carbon dioxide is effected at a partial pressure within the range of 175 to 700 kPa, the time taken between the formation of the slurry and the

BUREAU OMPI WIPO INTERNATIONAL

contact of the latter with the carbon dioxide being less than 0.5 hour.

9. A process as claimed in any one of the preceding claims characterised in that the carbon dioxide evolved during any of the process steps is recovered, purified, compressed and recycled to the leaching circuit.

10. A process for the production of substantially pure magnesium oxide from crude magnesium-containing compounds which have an iron impurity sufficiently low to be removable by selection of the process conditions, characterised by the steps of:-

(a) calcining crude magnesite or other suitable magnesium ore of suitable particle size to produce crude magnesium oxide;
(b) collecting and purifying any carbon dioxide contained in the off-gases from the calcination step (a);
(c) grinding the crude magnesium oxide from step (a) to a particle size suitable for subsequent leaching;
(d) slurrying the crude magnesium oxide in water and/or recycle liquor having a magnesium content of less than 0.5 g/l;
(e) treating the slurry from step (d) with carbon dioxide to convert at least part of the magnesium content of the slurry into magnesium bicarbonate, said treatment being carried out at a temperature of from 25-50°C, and at a pulp density selected

BUREAU OMPI WIPO INTERNATIONAL

to permit maximum magnesium extraction with minimum iron extraction;

(f) separating any unreacted solids from the resulting solution;

(g) air sparging and/or heating the solution from step (f) to produce substantially iron-free precipitate of hydrated magnesium carbonate and/or basic magnesium carbonate, and separating the precipitate from its mother liquor;

(h) purifying carbon dioxide produced in step (g) and recycling it to step (e);

(i) recycling the liquor from step (g) to step (d);

(j) calcining the precipitate from step (g) to produce substantially pure magnesium oxide and carbon dioxide;

(k) purifying the carbon dioxide from step (j) and recycling it to step (e).

BUREAU OMPI WIPO INTERNATIONAL

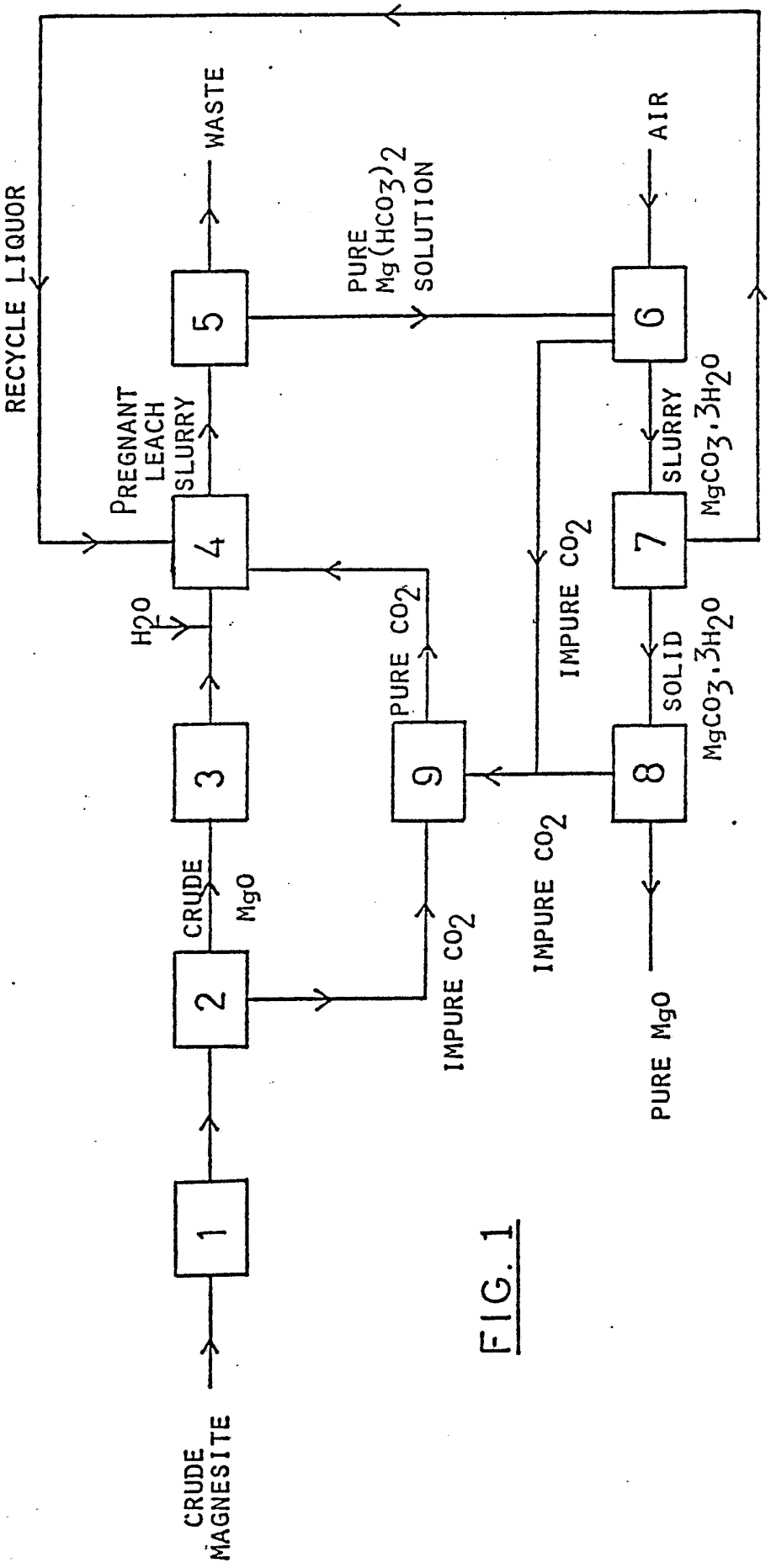

FIG. 1

BUREAU OMPI WIPO INTERNATIONAL

INTERNATIONAL SEARCH REPORT

International Application No PCT/AU 84/00036

I. CLASSIFICATION OF SUBJECT MATTER (if several classification symbols apply, indicate all) [3]

According to International Patent Classification (IPC) or to both National Classification and IPC

Int. Cl.[3] C01F 5/06, C04B 3/00

II. FIELDS SEARCHED

Minimum Documentation Searched [4]

Classification System	Classification Symbols
IPC	C01F 5/06, C04B 3/00

Documentation Searched other than Minimum Documentation to the Extent that such Documents are included in the Fields Searched [5]

AU: IPC as above

III. DOCUMENTS CONSIDERED TO BE RELEVANT [14]

Category *	Citation of Document, [16] with indication, where appropriate, of the relevant passages [17]	Relevant to Claim No. [18]
X	WO,A, 83/00142 (COMMONWEALTH SCIENTIFIC AND INDUSTRIAL ORGANIZATION) 20 January 1983 (20.01.83)	(1-10)
X	US, A, 2328286 (MACINTIRE) 31 August 1943 (31.08.43)	(1-10)
X	US, A, 3320029 (ADAMS) 16 May 1967 (16.05.67)	(1-10)
X	US, A, 4140745 (HASSLER) 20 February 1979 (20.02.79)	(1-10)
X	DE, A, 2137573 (OSTERREICHISCH-AMERIKANISCHE MAGNESIT AG) 8 February 1973 (08.02.73)	(1-10)
A	US, A, 1863966 (BROSCHE) 21 June 1932 (21.06.32)	(1-10)
A	US, A, 2390095 (GLOSS) 4 December 1945 (04.12.45)	(1-10)
A	FR, A, 708712 (MAISON CAMUS-DUCHEMIN) 28 July 1931 (28.07.31)	(1-10)

* Special categories of cited documents: [15]

"A" document defining the general state of the art which is not considered to be of particular relevance

"E" earlier document but published on or after the international filing date

"L" document which may throw doubts on priority claim(s) or which is cited to establish the publication date of another citation or other special reason (as specified)

"O" document referring to an oral disclosure, use, exhibition or other means

"P" document published prior to the international filing date but later than the priority date claimed

"T" later document published after the international filing date or priority date and not in conflict with the application but cited to understand the principle or theory underlying the invention

"X" document of particular relevance; the claimed invention cannot be considered novel or cannot be considered to involve an inventive step

"Y" document of particular relevance; the claimed invention cannot be considered to involve an inventive step when the document is combined with one or more other such documents, such combination being obvious to a person skilled in the art.

"&" document member of the same patent family

IV. CERTIFICATION

Date of the Actual Completion of the International Search [1]	Date of Mailing of this International Search Report [2]
14 May 1984 (14.05.84)	18 May 1984.
International Searching Authority [1]	**Signature of Authorized Officer [20]**
Australian Patent Office	A.S. Moore A.S. Moore.

ANNEX TO THE INTERNATIONAL SEARCH REPORT ON
INTERNATIONAL APPLICATION NO. PCT/AU **84/00036**

This Annex lists the known "A" publication level patent family members relating to the patent documents cited in the above-mentioned international search report. The Australian Patent Office is in no way liable for these particulars which are merely given for the purpose of information.

Patent Document Cited in Search Report	Patent Family Members		
US 4140745	AT 9408/77	AU 32274/78	BE 862741
	CA 1079932	DE 2758205	FR 2376823
	GB 1564664	JP 53088810	NL 7800107
	SE 7700156		
WO 8300142	AU 85810/82		

END OF ANNEX