(12) INTERNATIONAL APPLICATION PUBLISHED UNDER THE PATENT COOPERATION TREATY (PCT)

(19) World Intellectual Property Organization
International Bureau

(43) International Publication Date
19 January 2012 (19.01.2012)

PCT

(10) International Publication Number
WO 2012/007755 A2

(51) International Patent Classification:
A61M 39/02 (2006.01) *A61F 5/445* (2006.01)

(21) International Application Number: PCT/GB2011/051317

(22) International Filing Date: 13 July 2011 (13.07.2011)

(25) Filing Language: English

(26) Publication Language: English

(30) Priority Data:
1011815.6 13 July 2010 (13.07.2010) GB

(71) Applicant *(for all designated States except US):* **OSTOMYCURE AS** [NO/NO]; Gaustadalleen 21, N-0349 Oslo (NO).

(71) Applicant *(for MG only):* **JACKSON, Robert** [GB/GB]; St Bride's House, 10 Salisbury Square, London EC4Y 8JD (GB).

(72) Inventors; and

(75) Inventors/Applicants *(for US only):* **EDWIN, Bjorn** [NO/NO]; Gransandveien 15, N-3475 Saetre (NO). **THOMSEN, Peter** [SE/SE]; Hangestensvagen 2, S-421 67 Vastra Frolunda (SE). **HULTÉN, Leif** [SE/SE]; Barnens Byvag 16, S-444 60 Stora hoga (SE). **JOHANSSON, Martin** [SE/SE]; Stendalsvagen 14, S-434 93 Vallda (SE).

(74) Agent: JACKSON, Robert; Dehns, St Bride's House, 10 Salisbury Square, London EC4Y 8JD (GB).

(81) Designated States *(unless otherwise indicated, for every kind of national protection available):* AE, AG, AL, AM, AO, AT, AU, AZ, BA, BB, BG, BH, BR, BW, BY, BZ, CA, CH, CL, CN, CO, CR, CU, CZ, DE, DK, DM, DO, DZ, EC, EE, EG, ES, FI, GB, GD, GE, GH, GM, GT, HN, HR, HU, ID, IL, IN, IS, JP, KE, KG, KM, KN, KP, KR, KZ, LA, LC, LK, LR, LS, LT, LU, LY, MA, MD, ME, MG, MK, MN, MW, MX, MY, MZ, NA, NG, NI, NO, NZ, OM, PE, PG, PH, PL, PT, RO, RS, RU, SC, SD, SE, SG, SK, SL, SM, ST, SV, SY, TH, TJ, TM, TN, TR, TT, TZ, UA, UG, US, UZ, VC, VN, ZA, ZM, ZW.

[Continued on next page]

(54) Title: SURGICAL IMPLANT

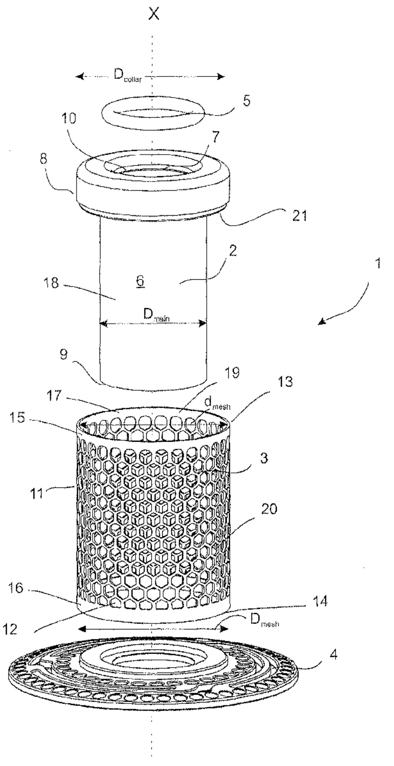

Fig. 1

(57) Abstract: An implantable device (1) consists of the following main components: a hollow, tubular body penetrating structure (2), a rigid porous tubular mesh (3), a base portion (4) in the form of a flange, and a sealing ring (5). The hollow, tubular body penetrating structure (2) has an axial main body (6) with a free end (7) provided with a collar (8) and an opposite end (9) connected to the base portion (4). The tubular body penetrating structure (2) has an internal passageway (10) for allowing introduction and passage of an object, which is to be put in communication with another object or organ inside the body. The sealing ring (5) fits into the internal passageway (10) of the axial main body (6) to provide sealing against the inserted object when required. The rigid porous tubular mesh (3) has a pattern (11) composed of a plurality of hexagonal mesh apertures (12) evenly distributed between a first coupling end (13) and a second coupling end (14), which coupling ends in the present embodiment terminate in respective solid coupling rings (16, 17).

(84) Designated States *(unless otherwise indicated, for every kind of regional protection available):* ARIPO (BW, GH, GM, KE, LR, LS, MW, *ML*, NA, SD, SL, SZ, TZ, UG, ZM, ZW), Eurasian (AM, AZ, BY, KG, KZ, MD, RU, TJ, TM), European (AL, AT, BE, BG, CH, CY, CZ, DE, DK, EE, ES, FI, FR, GB, GR, HR, HU, IE, IS, IT, LT, LU, LV, MC, MK, MT, NL, NO, PL, PT, RO, RS, SE, SI, SK, SM, TR), OAPI (BF, BJ, CF, CG, CI, CM, GA, GN, GQ, GW, ML, MR, NE, SN, TD, TG).

Published:

— *without international search report and to be republished upon receipt of that report (Rule 48.2(g))*

Surgical Implant

The present invention relates to an implantable device and, in particular, but not exclusively, to a percutaneous implant having a tissue-impenetrable body penetrating structure that may be anchored in soft tissue, e.g. in order to provide a passageway therethrough.

There are many different applications for implants in medicine. These include catheter perfusion or dialysis, skeletally attached artificial limbs, power supplies for cardiac assist devices, and artificial hearing aids.

Dental titanium implants that replace missing teeth have been very successful in that they have been shown to function over decades without adverse soft tissue effects. A similar kind of titanium implant system has also been used for bone-anchored hearing aids (BAHA). These clinically reliable prostheses are anchored in the skull, penetrate the skin, and form a stable implant-skin interface almost without adverse skin reactions. Since these implants are anchored in bone, a firm anchorage and good stability are obtained. This stability, together with the surgical technique employed, minimises the relative movement between the transcutaneous part of the implant and the surrounding soft tissue.

In contrast to bone-anchored implants, a limiting factor for the extended use of percutaneous devices anchored only in soft tissue is that most of the implant systems fail over prolonged periods of implantation. A common failure mode is marsupialisation, which is the final result of epithelial downgrowth along the implant surface. Various designs and implant surface properties have been considered to prevent the downgrowth of the epithelial cells.

Infection is another important failure mode caused by gaps between tissue and the skin-penetrating part of the implant. Epithelial downgrowth allows bacterial invasion between the skin and the implant interface, which often results in infection.

Mechanical stresses at the skin-implant interface, generated by the relative movement between implant and skin, are another cause of percutaneous implant failure. By maintaining a continuous inflammatory reaction in the soft tissue interface providing a gap between the implant and the surrounding skin and subcutaneous tissue, this eventually leads to marsupialisation providing a microbe invasion between the implant and soft tissue.

To reduce these interfacial stresses, several solutions have been investigated, see for example Asoda, S., T. Arita, et al. (2008) "Mechanical attachment of soft fibrous tissues to implants by using mesh structures." Clinical Oral Implants Research 19(1 1): 1171-1 177 ("Asoda") and Boyd, L. M., G. Heimke, et al. (1991) "An investigation of skin deformation around percutaneous devices." Clin Mater 7(3): 209-217.

All of the failure modes mentioned above are related to the soft tissue reaction to the implant. The formation and maintenance of a stable skin-implant junction in the area where the implant protrudes through the skin therefore appears to be the major factor in determining the success of percutaneous implants.

In the work by Asoda the use of a soft nylon mesh structure placed on the implant surface for the anchorage of fibrous tissues is evaluated. Other porous or semiporous structures or surface textures have been proposed for the skin-penetrating part, see for example Chehroudi, B. and D. M. Brunette (2002) "Subcutaneous microfabricated surfaces inhibit epithelial recession and promote long-term survival of percutaneous implants." Biomaterials 23(1): 229-237 and Pitkin, M., G. Raykhtsaum, et al. (2006). "Skin and bone integrated prosthetic pylon: a pilot animal study." J Rehabil Res Dev 43(4): 573-580 or in the subcutaneous area, e.g. Gerritsen, M., J. A. Lutterman, et al. (2000). "The influence of impaired wound healing on the tissue reaction to percutaneous devices using titanium fiber mesh anchorage." J Biomed Mater Res 52(1): 135-141. However these structures have not fully provided the results anticipated and also their porosity is not fully controlled in all dimensions.

US 2009/0105545 discloses a system for percutaneously implanting a dual lumen catheter through an incision in a patient. The catheter is located within a sleeve which carries a porous biocompatible ingrowth layer. The entire system is elongate, with an exterior anchoring and connecting part arranged to lie on the patient's skin adjacent the incision. The catheter thus enters the patient at an acute angle to the skin's surface.

In summary, one of the crucial factors that determine the long-term outcome of a percutaneous device is the implant-skin interface sealing. As noted above, many attempts to integrate biomaterials with skin permanently have failed because of epidermal marsupialisation and/or infection.

Viewed from a first aspect, the present invention provides an implantable device comprising a body penetrating structure and tissue ingrowth means, wherein the body penetrating structure is tissue-impenetrable, and the ingrowth means comprises a rigid or substantially rigid porous mesh extending around, and preferably completely encircling or covering, the body penetrating structure along a body penetrating axis.

Thus, the implant of the present invention is arranged to allow tissue to grow into the outer surface of the implant without penetrating the body penetrating structure. The objective of this is to enable a stable implant-skin or implant-body tissue interface to be provided, which in turn enables firm anchorage in soft tissue. A stable implant-skin/body tissue interface reduces progressive downgrowth of epithelial cells along the implant so that tissue developed or developing at the implant-skin interface is less susceptible to infection.

As noted above, the porous mesh preferably completely encircles the body penetrating structure, thereby enabling ingrowth of tissue right around the perimeter/circumference of the implant, thereby providing a reliable barrier to infection. The mesh preferably also extends along at least half of the axial length of the implant, more preferably along at least three quarters thereof (excluding any extending bone anchor).

The body penetrating axis is preferably arranged to be substantially normal to the surface of the patient's skin when the implant is in use. Consequently, the implant is preferably substantially in the form of a right cylinder and most preferably that cylinder has a circular base.

It also follows that the exterior end of the implant is preferably substantially flush with the skin when implanted, i.e. whilst it may have a protruding collar or connecting member, the major portion of the implant (in the axial direction) is preferably configured to be received within the patient. For a typical implant, preferably less than 30%, and more preferably less than 20% of the implant's length is configured to project from the skin of the patient. Preferably, the ingrowth means extends in the axial direction along substantially all of the remaining length.

In contrast to porous flexible meshes, a (substantially) rigid porous mesh maintains its position in relation to the body penetrating structure. As it is unable to flex, or can only flex to a limited, insignificant degree, the apertures of the mesh into which tissue grows do not stretch or move either axially in relation to the body penetrating structure or radially towards and away from the body penetrating structure to any significant degree. This is important because tissue does not bond well to the body penetrating stracture itself. Also, since the shape and position of the apertures of the porous mesh are situated at a stable (and therefore substantially the same) position during the entire healing process, tearing and other stresses are prevented from being applied to the sensitive new tissue. This allows healing to take place undisturbed.

In addition, the implant may be designed such that the binding strength and thus the physiological tissue attachment to the device is less affected when the device is subjected to mechanical stress.

It will be appreciated that the ingrowth means should be arranged to allow a degree of ingrowth sufficient to provide a firm and reliable tissue attachment of the implantable device to the body, such that said tissue attachment has no or at least minimal risk of marsupialisation, and is substantially unaffected by outside mechanical influences and stresses that are inevitably conferred to the implantable device during the patient's movements. Thus the implantable device preferably has ingrowth means configured to minimise the relative movement between at least the body penetrating structure and the surrounding soft tissue.

Where the ingrowth means comprises a single layer of mesh, ingrowth may be facilitated by providing an annular ingrowth space between the mesh and the body penetrating structure, i.e. the mesh may form a layer that is radially-spaced from the body penetrating stracture. However, in other structures that will be described below, the ingrowth space may be between layers of mesh and/or integral to the ingrowth mesh itself.

Although the implant can be used for any of the purposes set out above, in a preferred form there is provided an implantable device for establishing an access port to a body part or a body cavity below the skin surface. Thus, the body penetrating structure may comprise a passageway along the body-penetrating axis.

The term "mesh apertures" used herein refers to the pores of a porous mesh, which term includes through openings or holes passing the entire way through the wall of a rigid porous mesh, but also includes indentations or cavities that pass a substantial distance inside the ingrowth means from either side of the rigid porous mesh without penetrating it. The mesh apertures may be formed in a "mesh aperture pattern", which term is to be understood as including both random or defined arrangements of mesh apertures in the mesh. There may be various degrees of porosity, various numbers of apertures per unit area, various distributions of apertures and various sizes and shapes of the individual apertures, and combinations of the above.

In most applications, such as where an access port is provided, the body penetrating structure is formed as a hollow body. Thus, in a preferred embodiment that is particular easy to manufacture, the body penetrating structure is cylindrical or tubular; it is preferably circular in section, but other sections, for example, an ellipse, may be useful. The invention may, however, be applied to other forms; for example the body penetrating structure may be frusto-conical.

The tissue ingrowth means is preferably arranged concentrically around the body penetrating structure and therefore preferably has a similar shape.

As the body penetrating structure is tissue-impenetrable, where it is provided with a passageway, the internal diameter of the hollow tubular body penetrating structure is kept free of obstructions. This allows an object, such as, for example a tube, a tool or an organ, to pass freely and smoothly through said internal diameter, for example to be displaceable inside the internal diameter without the implantable device being torn off, or the tissue attachment otherwise being damaged during manipulation of an object inside the internal diameter.

The body penetrating structure and/or the ingrowth means may have its/their exterior surface(s) made smooth or roughened, e.g. provided with an open microstructure and/or nanostructure for facilitating additional attachment and infiltration of connective tissue.

The body penetrating structure and/or the tissue ingrowth means may be coated with agents facilitating additional protection against infections, e.g. they may be coated with noble metals or other antibacterial agents, or be coated with other organic or inorganic agents facilitating a closer tissue adaptation and sealing. An example of a suitable coating is hydroxyapatite (a mineral form of calcium apatite and a major component and an essential ingredient of normal bone and teeth).

Although, as discussed above, the invention may comprise only a single, first, ingrowth mesh (e.g. in the form of a tube surrounding the body penetrating structure), quicker ingrowth and better stability (i.e. reduced relative movement between tissue and implant surface) can be achieved if the ingrowth means further comprises at least a second rigid or substantially rigid porous mesh having at least one second mesh aperture pattern and encircling the first porous mesh.

This arrangement is believed to encourage early ingrowth, which provides initial stability and minimises the interfacial stresses at the implant surface. Thus, the soft tissue and skin may subsequently adhere to, or at least be in intimate contact with, the exterior surface of the body penetrating structure and effectively seal it off from microbial invasion. The first mesh aperture pattern and the at least one second mesh aperture pattern may be the same as each other, but they may differ. The mesh aperture patterns may be selected according to where in the body the implantable device is to be implanted.

Factors to be considered when choosing an appropriate implantable device and mesh aperture pattern include the thickness and nature of the adjacent tissue layer(s) through which the body penetrating structure will pass, and the intended location and use of the implantable device. Different kinds of tissue layer grow together at different rates in a given kind of mesh aperture pattern. Thus, the mesh aperture pattern(s) can be chosen and targeted individually according to the circumstances of intended use.

The use of such first and second meshes in the present context is a further inventive concept and therefore, viewed from another aspect, there is provided an implantable device comprising a body penetrating structure and tissue ingrowth means, wherein the ingrowth means comprises a plurality of porous mesh layers extending around (an preferably fully encircling or covering) the body penetrating structure along a body penetrating axis. The mesh layers may be rigid or substantially rigid (as described above) and are preferably arranged concentrically about the body-penetrating axis of the implant.

The first rigid porous mesh and the at least one second rigid porous mesh may be connected to each other at a plurality of locations along the body penetrating axis, which may thereby provide a mesh or pore structure both along the body penetrating axis and radially with respect to said body penetrating axis. The three-dimensional porous mesh resulting from the combined and connected adjacent rigid porous meshes comprises a plurality of interstitial areas or spaces.

It will be appreciated that the mesh layers may thus form a three-dimensional structure whereby there are substantial numbers of interconnections between the layers and indeed, individual layers or mesh may not be discernable as such. The invention includes the use of such a three-dimensional mesh structure.

Thus, viewed from a still further aspect, the invention provides an implant comprising an ingrowth means, wherein the ingrowth means comprises a three-dimensional mesh structure having a multiplicity of radial, axial and circumferential interconnections .

This structure may be infiltrated with the tissue formations resulting from the body immediately starting to regenerate and repair itself subsequent to the injury inflicted when making the necessary incision for introducing the implantable device. The interstitial areas can be configured and selected to have an outline, shape and size established as being appropriate for e.g. soft tissue attachment or bone anchorage.

Furthermore, tissue engineering techniques can enable such spaces (or other suitable spaces in the implant) to be provided with seed cells, typically the patient's own cells, which facilitate tissue growth within the implant.

Alternatively, the mesh layers may be formed free of radial interconnections, at least except at the axial ends of the mesh layers. For example, a plurality of concentric cylindrical meshes may be provided which are interconnected to the body penetrating structure and to each other at one or both of their ends. By avoiding radial interconnections potential infection paths may be avoided.

The mesh apertures may be of any convenient shape, for example circular or hexagonal and are preferably arranged to form a honeycomb structure.

Depending on the use of the implantable device, the aperture area of at least some, preferably all, of the mesh apertures of a first mesh aperture pattern can be smaller than the aperture area of at least some, preferably all, of the mesh apertures of a second mesh aperture pattern. Alternatively, the area and/or shape of a mesh aperture of any of the first and second mesh aperture patterns can be identical or different along the body-penetrating axis and/or along the circumference of any of the first and second rigid porous mesh.

Where the mesh apertures of each of a plurality of mesh layers differ in size, the mesh apertures, and thus interstitial spaces, are preferably smallest where they are closest to the body penetrating structure. Thus, in the case of a cylindrical implant, the size of the mesh apertures and interstitial spaces preferably increase with increasing radius.

The aperture area of a mesh aperture of either or both of the first mesh aperture pattern and second mesh aperture pattern may be largest at the free (i.e. exterior) end of the body penetrating structure. Thus the density, i.e. the size of the apertures of the rigid porous meshes may be varied in the axial direction since the body penetrating structure interfaces different tissue types along its axis, such as epidermal tissue and subcutaneous fat, providing optimal early ingrowth and sealing for each type. Due to the arrangement of the one or more rigid porous meshes, the connective tissue can be formed between the mesh and the body penetrating structure as a coherent tissue structure infiltrating the combination of rigid meshes and extending from the exterior surface of the body penetrating structure through the meshes to the incision surfaces created in the body for creating access for the implantable device.

One preferred way of arranging the size of the apertures of the rigid porous meshes is by gradually increasing the aperture area of a mesh aperture from the second (i.e. internal) end towards the free end of the body penetrating structure.

Any suitable number of rigid porous meshes can be arranged at increasing distance from the body-penetrating axis of the body penetrating structure to encircle or cover the body-penetrating structure to obtain a firm tissue ingrowth and attachment to the walls of the incision or hole made for providing space for the implantable device. In case of a tubular body-penetrating structure, the number of porous rigid meshes can beneficially be arranged concentrically with said tubular body-penetrating structure, preferably with a radial gap between the concentric meshes and optionally also a radial gap towards the exterior surface of the body penetrating structure. The complex ingrowth path thereby formed has an extremely large tissue contacting area, with many apertures and many changes in tissue growth direction thereby inducing creation of a well-vascularized tissue bond of improved mechanical strength. The strong intimate tissue contact mechanically blocks microbial intrusion and invasion. Furthermore, in the event that infection occurs despite every effort to avoid this, the new tissue is heavily endowed with blood vessels which facilitate for drug delivery, and accordingly the well vascularised tissue provides for very favourable treatment conditions of any possible infection.

The body penetrating structure may have a free end, for example in the form of a collar, adapted for protruding from the body to allow an object to be inserted or to be attached to the body via the implantable device, and an opposite end facing inside the body, preferably serving as the internal anchor.

In a particularly preferred form, the collar forms the exterior end of the implant and the body penetrating structure and/or tissue ingrowth means depend therefrom in the axial direction.

The protruding, free, end will normally be tissue-impermeable and may be polished, plated or coated in order to prevent tissue attachment.

The implant may be configured such that an impermeable collar is provided at the free end which in use is clear of the body such that the dermis and epidermis may grow without impediment through the ingrowth mesh. However, in a preferred form of the invention, a portion, preferably 2-5mm in axial length, of the circumference or perimeter of the collar is located within the body adjacent the epidermis and optionally also the dermis in order to control epidermal downgrowth and/or prevent ingrowth of epidermis (and optionally also dermis). This enables the expulsion of microbes and dead cells and other debris between body tissue and the collar by means of the body's natural processes, thereby maintaining hygiene at the implant-body interface.

This provides a further inventive concept and therefore, viewed from a further aspect, there is provided an implantable device for implantation into a human or animal body, the device having a body-penetrating axis with an exterior end and an interior body-penetrating end located thereon, the implant comprising a void surrounded an impermeable collar at the exterior end and by permeable ingrowth material extending therefrom towards the interior end, the ingrowth material being arranged to enable ingrowth of body tissue in order to firmly secure the implant, whereas the collar is arranged to be located partially within the body such that ingrowth of the epidermis is prevented and/or epidermal downgrowth is controlled.

The impermeable collar therefore comprises a body penetrating portion that is preferably 2-5mm in axial length and preferably further comprises a projecting portion that is preferably 5-10mm in length.

A related aspect of the invention provides an implant as described above implanted into a patient's body such that the epidermis, and optionally also the dermis, abuts the circumferential face of the collar.

A further related aspect of the invention provides a method of selecting an implant as described above wherein the thickness of the epidermis of a patient is determined and an implant having a collar having suitable dimensions is selected based thereon.

In a preferred form of the invention the collar may be provided with means to indicate its correct position relative to the epidermis and/or means, such as a circumferential projection to locate it in such position.

This aspect of the invention may be applied to an implant having an impermeable body-penetrating structure as described above, or to an implant where tissue is allowed to grow into the void, such as an ostomy implant, as described below.

The invention also extends to a method of implanting an implant of the type discussed above, wherein the implant is implanted such that ingrowth of the epidermis and optionally also the dermis is prevented by the collar. Thus the implant is positioned such that a portion of the circumferential face of its collar abuts the epidermis. Most preferably the base (interior end) of the collar is substantially level with the interface between the subcutaneous fat and the skin.

The implant may be provided with an anchor positionable inside the body to assist in securing it in position. This may be a base in the form of a flange extending in the radial direction which may be situated on top of a suitable tissue layer to distribute stresses over a large area. The base may be configured to be flexible, in particular to allow the axis of the body penetrating structure to move relative to that of the anchor. The internal anchor may also be provided with apertures to allow for suturing and/or to allow tissue ingrowth.

However, the inventors have recognised that the improved tissue attachment that may be obtained by means of the invention enables the anchoring base to be dispensed with. Thus, the implant may be secured to the body by means only of the ingrowth of tissue in the porous mesh.

This is a further inventive concept in itself and therefore, viewed from another aspect the invention provides an implantable device for implantation into a human or animal body, the device having a body-penetrating axis with an exterior end and an interior end for location inside the body, both ends being located along the body penetrating axis, the implant comprising a void surrounded by permeable ingrowth material, wherein the ingrowth material extends in the body-penetrating direction thereby to enable ingrowth of body tissue in order to firmly secure the implant, and wherein the interior end has a diameter not substantially larger than the exterior end.

Thus, by means of this aspect of the invention, the implant may be secured entirely, or at least substantially, by means of the ingrowth of tissue through and around the ingrowth material. Consequently, there is no need to provide a base having a radially-extending anchor, with the result that the diameter of the base of the implant (at the interior end) need be no larger than that of the exterior end. This enables the implant to be implanted into the body by means of a single incision no bigger than the implant's diameter into which it is inserted. In contrast, prior implant designs having an anchoring flange require at least incisions. As well as the first incision into which the implant is located (which must be no larger than the body of the implant), a second incision is required to enable the implant to be located into the first incision from within the body.

Although for ease of insertion, the diameter of the interior end is preferably no larger than the diameter of the ingrowth material, it is recognised that body tissues are somewhat elastic and that in some embodiments it might be convenient to provide a base that is slightly larger than the exterior end. Thus, by "not substantially larger" it is meant that the diameter of the base of the implant is such that the implant may be inserted axially into the incision in the body from the exterior of the patient in the manner described above. In other words, the implant is free of any radially-extending flange or other similar radially-extending anchor.

The ingrowth material may conveniently be in the form of a cylinder. It may comprise any suitable ingrowth means, but a rigid or substantially rigid mesh as described herein is preferred for reasons already discussed.

The implant may further comprise interior and/or exterior end portions to provide additional strength and rigidity to the structure. Thus, the exterior end may have a circular collar and the interior end may have a circular base to which the mesh is attached.

The implant may further comprise an impermeable body penetrating structure to define the void and provide a passageway or interior space within the hollow implant as discussed in more detail herein. Thus, the implant may be used to provide a passageway for a tube or catheter, or it may provide an interior space for a device such as a hearing aid.

Alternatively, the ingrowth material itself may define the void such that tissue may grow through it into contact with further body tissues within the void. Thus, the implant may form an ostomy implant into which a portion of intestine or other bodily duct may be drawn and secured in place. Tissues may then grow through the ingrowth material to form a bond between the intestine and the surrounding fat and muscle layers in the known manner. In this case the exterior portion of the collar referred to above may form a connecting ring for use with a bag or lid.

Another embodiment of a base portion is a screw-threaded protrusion, which is suitable for being screwed into bone structures. The screw-threaded protrusion could optionally have a self-cutting screw thread.

Preferred implantable devices may be made of a biocompatible material, preferably titanium, such as commercially pure titanium of grades 1 to 4. The surfaces of the rigid porous meshes may be smooth or roughened in a similar manner, as may be the exterior surface of the body penetrating structure.

The mesh apertures can be made by, for example, laser-cutting, electrical discharge machining or by selective metal sintering, and any of the surfaces of the implantable device can be modified e.g. by vapour deposition, plasma spraying, anodizing etching or sandblasting to increase the surface area and thereby optimise the tissue integration response.

If the implantable device is to be used for receiving a tube or catheter to provide a path via the skin to an interior body space or cavity, it is preferred that the free end of the hollow body penetrating structure is provided with a seal, for example, a sealing ring or a gasket to prevent leakage between tube and interior surface of the hollow body penetrating structure.

The device according to the present invention is useful as a percutaneous device, a tissue access device, a body cavity access device, a power and signal conduit, an internal or external prosthetic device.

It will likewise be appreciated that the invention extends to the manufacture of an implant according to any of the aspects and preferred forms of the invention as set out above. Furthermore, it extends to the use of such a device including a method of surgery whereby such a device is implanted for any of the purposes set out herein.

Thus, viewed from a still further aspect, there is provided a method of implanting an implant, comprising forming an incision in a human or animal body and inserting an implant according to any of the aspects and preferred forms of the invention set out above. Tissue is then allowed to grow into the ingrowth means as described above.

The arrangement of one or more rigid porous meshes provides for stronger binding of the new tissue to the implantable device than when soft meshes are used. Due to the rigid arrangement and selection of correct aperture size, risk of damage to the tissue junction is minimal. If detachment from the device should accidentally occur, for example if damage or pathological processes take place at the tissue bond to the implantable device, firm re-attachment is immediately self-initiated and completed within a few weeks.

As will be clearly understood by the person skilled in the art, combinations of various porous meshes are included within the scope of the present invention and various base portions can also be provided with any foreseeable combination of meshes and mesh apertures. The number of combined meshes may be more than two and meshes of many different configurations can be arranged at a distance from each other or be, for example, interconnected on one or more selected location(s) or at substantially all mesh apertures across several meshes and/or lengthwise along the body-penetrating axis, in which case the meshwork consists of a plurality of perforated channels extending radially inwards from the mesh farthest from the body-penetrating axis towards the body penetrating structure.

Within several medical disciplines there is a broad demand for biologically and functionally reliable percutaneous devices to establish a long-term or permanent access from the external environment to the inside of the human body cavities (e.g. intraperitoneal access) or a necessity for breaching the skin or mucosal barrier as in the case of transcutaneous osseointegrated implants (e.g. dental implants). This access is for example needed for long term administration of pharmaceuticals or nutrient, dialysis, drainage, electrical supply or stimulation. The purpose for breaching the skin barrier could for example be for attaching prostheses or bone anchored hearing aid.

The implant of the invention is widely applicable. In the context of blood access devices, it may be used to enable: continuous infusions or blood sampling (e.g. peripheral or central venous catheter); external circulation; and dialysis. Another application of the implant is as a tissue access devices, for example for drug delivery or connection to visceral organs. It may also be used to provide access to body cavities, for example for a prosthetic urethra; for peritoneal dialysis or middle ear ventilating tubes. A still further application is as a power and signal conduit, e.g. to provide pneumatic, hydraulic, or electrical power for activation of internal artificial organs, e.g. as a power supply cable for left ventricle assist device. It may also be used to provide for electrical signals for stimulation or control or natural or artificial organs, e.g. pacemaker leads; or for recording of electrical potentials from internal natural or artificial organs. The invention may also be used to provide internal or external prosthetic devices in the following fields: urethra and prostate; snap button for fixation of external prosthetic devices; cochlea conduit (bone anchored hearing aid); and dental implants.

Embodiments of the invention will now be described, by way of example only, and with reference to the accompanying drawings :-

Fig. 1 shows an exploded perspective view of a first embodiment of an implantable device according to the present invention;

Fig. 2 shows the same embodiment in its assembled state;

Fig. 3 shows a sectional perspective view taken along line III-III of Fig. 2;

Fig. 4 shows a sectional perspective view taken along line IV-IV of Fig. 2;

Fig. 5 shows an exploded perspective view of a second embodiment of an implantable device according to the present invention;

Fig. 6 shows the second embodiment in its assembled state;

Fig. 7 shows a sectional perspective view taken along line VII-VII of Fig. 6;

Fig. 8 shows a sectional perspective view taken along line VIII-VIII of Fig. 6;

Fig. 9 shows a fragmentary perspective view of a third embodiment according to the present invention with a tube inserted in the internal diameter;

Fig. 10 shows a perspective view of a fourth embodiment of an implantable device according to the present invention;

Fig. 11 shows an axial sectional perspective view taken along line XI-XI of Fig. 10;

Fig. 12 shows a sectional perspective view taken along line XII-XII of Fig. 10;

Fig. 13 shows a perspective view of a fifth embodiment of an implantable device according to the present invention,

Fig. 14 shows an axial sectional perspective view taken along line XIV-XIV of Fig. 13;

Fig. 15 is a perspective view of a sixth embodiment of an implantable device according to the present invention;

Fig. 16 is a perspective view of the threaded base portion of the sixth embodiment;

Fig. 17 is an axial sectional perspective view taken along line XVII-XVII in Fig. 15.

Fig. 18 is a sectional view of the implantable device of the first embodiment implanted in a patient;

Fig. 19 is a sectional view of the implantable device of the second embodiment implanted in a patient; and

Fig. 20 is a sectional view of the implantable device of the sixth embodiment implanted in a patient.

Referring first to Fig. 1, the first embodiment of an implantable device 1 consists of the following main components: a hollow, tubular body penetrating structure 2, a rigid porous tubular mesh 3, a base portion 4 in the form of a flange, and a sealing ring 5.

The hollow, tubular body penetrating structure 2 has an axial main body 6 with a free end 7 provided with a collar 8 and an opposite end 9 connected to the base portion 4. The tubular body penetrating structure 2 has an internal passageway 10 for allowing introduction and passage of an object, which is to be put in communication with another object or organ inside the body. The sealing ring 5 fits into the internal passageway 10 of the axial main body 6 to provide sealing against the inserted object when required.

The rigid porous tubular mesh 3 has a pattern 11 composed of a plurality of hexagonal mesh apertures 12 evenly distributed between a first coupling end 13 and a second coupling end 14, which coupling ends in the present embodiment terminate in respective solid coupling rings 16, 17. Inclusion of coupling rings simplifies the manufacturing process but can be dispensed with if preferred.

The collar 8 has an exterior diameter D_{collar} that is larger than the exterior diameter D_{main} of the axial main body 6, and the first rigid porous tubular mesh 3 has an internal diameter d_{mesh} that is larger than the exterior diameter D_{main} of the axial main body 6 of the body penetrating structure 2. This arrangement provides a circumferential gap between the exterior surface 18 of the body penetrating structure 2 and the opposing wall surface 19 of the first rigid tubular mesh 3, to provide space for the firm tissue anchor obtained by ingrowing tissue infiltrating the rigid porous tubular mesh 3.

The exterior diameter D_{mesh} of the first rigid porous tubular mesh 3 is smaller than or equal to the exterior diameter D_{collar} of the collar 8 to which the first end 13 of the first rigid porous tubular mesh 3 is rigidly connected. At the opposite second end 14 the first rigid porous tubular mesh 3 is rigidly connected to the base portion 4, which in the present embodiment is the anchoring flange known from the applicant's prior European patent No. EP 1632201, the design and functionality of which is incorporated by reference in the present patent application.

In particular, the base portion 4 is a flange configured to provide axial and radial flexibility. The flange 4 can yield about the axial direction due to circumferentially spaced apart S-shaped connection members. Connective tissue is created and integrated in the gaps between the components of the flange and generates an elastic coupling of the implantable device to the body.

As may best be seen from Fig. 2, the exterior surface of the rigid porous tubular mesh 3 has a smooth transition in the axial direction into the exterior surface of the collar 8 when the first end 13 is joined to the breast 21 of the collar 8. At the opposite (second) end 14, the porous rigid tubular mesh is joined with the flange 4 that protrudes radially from said second end 14 to provide a suitable anchoring surface inside the body. The sealing ring 5 is seated in a circumferential groove 22 in the collar 8 to engage an object inserted into the internal diameter 10.

Referring now to Fig. 3, the rigid porous tubular mesh 3 encircles the axial main body 6. The radial gap 16 between the exterior surface 18 of the body-penetrating structure 2 and the interior surface of the rigid porous tubular mesh 3 is defined by $r \approx (d_{mesh} - D_{main})/2$.

The rigid porous tubular mesh 3 is rigidly suspended between the collar 8 and the flange 4, as seen more clearly in Fig. 4. In contrast to prior art implantable devices, implementing bendable and pliable soft nylon meshes, which yield radially in response to more and more tissue developing in the gap between the rigid porous mesh 3 and the body penetrating structure 2 at the risk of detaching, a rigid mesh maintains its radial position and distance from the body-penetrating axis X. The mesh also contributes to the structural stability and thus the solid part can be made smaller and hence a smaller and lighter implant is possible.

The second embodiment of an implantable device 23 shown in Figs. 5 and 6 has a plurality of components common with the components of the first embodiment 1 and for like parts the same reference numerals are used.

The second embodiment of an implantable device 23 has a first rigid porous tubular mesh 3 with a first aperture pattern 11 with hexagonal mesh apertures 12. The interior diameter $d1_{mesh}$ of the first rigid porous tubular mesh 3 is smaller than the corresponding interior diameter $d2_{mesh}$ of the first embodiment 1, thereby reducing the radial gap between the exterior surface 18 of the body penetrating structure 2 and the interior surface of the first rigid porous tubular mesh 3, as seen more clearly in the sectional view of Fig. 7, to provide radial space below the breast 21 of the collar 8 for a second rigid porous tubular mesh 25, as seen more clearly in the axial sectional view of Fig. 8.

The second rigid porous tubular mesh 25 surrounds the first rigid porous tubular mesh 3 and is spaced a distance r from the body penetrating structure 2. It has a second mesh aperture pattern 26 corresponding substantially to the first mesh aperture pattern 11 in that it has hexagonal mesh apertures 27 but with a larger area A than the areas a of apertures 12 of the first mesh aperture pattern 11. The second rigid porous tubular mesh 25 also has a larger interior diameter $d2_{mesh}$ than the first rigid porous tubular mesh 3 resulting in the second rigid porous tubular mesh 25 encircling the first rigid porous tubular mesh 3.

The two rigid meshes create a combined meshwork 26 which may be effectively infiltrated by new tissue. Two axial tissue walls can be created, one between the first rigid porous tubular mesh 3 and the exterior surface 18 of the axial main body 6, and another between the first rigid porous tubular mesh 3 and the second rigid porous tubular mesh 25. New tissue traverses both the first 3 and the second rigid porous tubular mesh 25 and grows together with the body at the surgical incision site generating a firm, steady and reliable binding of the implantable device to the edges of the incision. Vascularisation of the tissue walls between any of the circumferential meshes and body penetrating part develops very fast contributing to increased ingrowth speed in the meshwork due to good blood supply. Also, the risk of infection is reduced due to the early generation of blood vessels.

The base portion 24 of the second embodiment 23 is a flat termination piece of reduced axial extent. The purpose of the termination piece 24 and the breast 21 is to keep the first and the second rigid porous tubular meshes 3, 25 connected to the body penetrating structure 2 via the collar 8 in a radially spaced apart manner at the first ends 13, 29 and second ends 14, 28 of the tubular meshes 3, 25. Both the breast 21 and the termination piece 24 may be configured to engage or otherwise mate with as many porous rigid tubular meshes as desired, as well as exterior and internal diameters and axial length of body penetrating structure 2 and tubular meshes 3, 25 can be selected according to the intended purpose, and nature of tissue at the implantation site.

The meshwork created by the circumferential meshes provides a more complex healing path than for the first embodiment 1. By reducing the areas of the mesh apertures towards the body-penetrating axis X, initial ingrowth and preliminary tissue attachment in the larger mesh aperture is quickly achieved. Subsequent ingrowth to the smaller mesh apertures provides firm anchorage and attachment of the implantable device in the body and an effective tissue sealing towards the body-penetrating structure. Furthermore, after the initial ingrowth in the outer mesh, the tissue between the mesh and the solid post forms a single "unit", minimising the relative motion between the solid part and the tissue inside the mesh, thus reducing the inflammatory response.

The third embodiment 30 shown in Fig. 9 consists of the flange 4 of the first embodiment 1, and the body penetrating structure 2, collar 8 and first 11 and second rigid porous tubular meshes 25 of the second embodiment 23 of the implantable devices according to the present invention. A feed tube 31 is shown inserted in the internal passageway 10.

A fourth embodiment 33 is shown in the perspective view of Fig. 10. It consists of the flange 4 of the first embodiment 1, and the body penetrating structure 2 and collar 8 of the second embodiment 23. The fourth embodiment 33 differs from the previously described embodiments in that the body-penetrating structure 2 is encircled by a sophisticated three-dimensional, rigid meshwork 34 rigidly inserted between the breast 21 and the flange 4 for enhanced tissue ingrowth. In a variant of this embodiment, the flange is substituted by the termination piece 24, or any other termination that stabilises the attachment of the meshwork around the body-penetrating structure. The implant may also be produced as one part with selective laser sintering or comparable methods thus eliminating the need for laser welding.

The sectional views of Figs. 11 and 12 illustrate the porosity of the meshwork when viewed axially and traverse to the body-penetrating axis, respectively. The meshwork 34 has outmost apertures 35 for initial access of new tissue, and passages or channels 36 tapering radially towards the body penetrating structure 2 allowing generation of new tissue towards said body penetrating structure 2. Axially the passages or channels 36 are penetrated by circumferentially distributed first holes 37a closest to the body penetrating structure 2, and second holes 37b closest to the outmost apertures, so that all outermost apertures 35 extend into both radially tapering passages or channels 36 and holes 37a, 37b in a defined channel system having continuous communication between all apertures 35, 17 passages or channels 36 and holes 37a, 37b irrespective of location or size of said apertures 35, passages 36 or channels and holes 37a, 37b.

Thus, the meshwork 34 of the fourth embodiment 33 is substantially composed of a first porous tubular mesh 38 having a first mesh aperture pattern 39 with circular apertures 45 of a first mesh aperture area A1. The first porous tubular mesh 38 is encircled by an intermediate rigid porous tubular mesh 40 having an intermediate mesh aperture pattern 41 with mesh apertures 42 of an intermediate mesh aperture area A2 larger that the first mesh aperture area A1. The intermediate rigid porous tubular mesh 40 is encircled by a second rigid porous tubular mesh 43 having a second mesh aperture pattern 44 with outmost apertures 35 of a second mesh aperture area A3 larger than both the first mesh aperture area A1 and the an intermediate mesh aperture area A2. These three meshes 38, 40, 43 all have circular mesh apertures and are interconnected axially, thereby creating the axial passages or channels 36 which are penetrated by the holes 37a, 37b.

The fifth embodiment of an implantable device 45, shown Fig. 13, corresponds substantially to the first embodiment 1. Where parts correspond to those of previously described embodiments the same reference numerals are used. The fifth embodiment 45 differs from the first embodiment 1 in that it has a different mesh aperture pattern 47.

The rigid porous tubular mesh 46 has a first end 48 anchored below the breast 21 to connect rigidly with the collar 8 of the body penetrating structure 2, and an opposite second end 49 rigidly secured to the flange 4. The mesh aperture pattern of 47 the fifth embodiment 45 has first circular mesh apertures 50 with sizes of mesh aperture areas A4 that decrease gradually from the first end 48 towards the second end 49. In a variant of this embodiment, hexagonal mesh apertures are employed with the areas of the individual hexagonal mesh apertures decreasing towards the base portion.

Whereas the first embodiment 1 is particularly suited for being implanted in one single kind of tissue layer, the fifth embodiment of an implantable device 45 is specifically adapted to pass through, and allow secure ingrowth of, many different kinds of adjacent tissue layers having different fibre structures and ingrowth rates. As in the first embodiment, the fifth embodiment has a radial gap between the exterior surface 18 of the axial main body 6. In a further variant, the fifth embodiment of an implantable device 45 is provided with one or more second rigid porous tubular meshes.

A sixth embodiment is shown in Fig. 15. It corresponds to the second embodiment 23, except that the termination piece 24 extends into a base portion 51 for bone anchorage of, for example, a hearing aid. The upper part (as shown) of the termination piece is similar to that of the second embodiment.

The threaded base portion 51 is shown in more detail Fig. 16. As may be seen, the base potion is provided with a thread 52. The thread 52 may expediently be provided with sharp edges to provide a self-cutting screw thread

As seen in the sectional view of Fig. 17, the internal diameter 10 of the body penetrating structure 2 is a blind bore with a closed end 54 at a distance from the collar 8. This delimits a cavity 56 for enclosing and securing an object, e.g. a hearing aid.

Fig. 18 shows the first embodiment 1 implanted in a patient 60. The base 4 is located immediately above peritoneum 64 and just below the muscle layers 63. If necessary the base can be sutured in position by means of apertures provided therein. The body penetrating structure 2 and surrounding rigid porous mesh 3 pass through the subcutaneous fat 62 and muscle layers 63, with just the collar 8 extending partially above the epidermis and dermis 61.

The method of implantation is substantially as set out in the applicant's prior patent EP 1632201. However, the relative positions of the upper end of rigid porous mesh 3, the collar 8 and the epidermis/dermis 61 is an important novel feature of the present embodiment and will be described further below.

After implantation, the healing process results in the ingrowth of tissue in the manner known generally in the art. This results in ingrowth and vascularisation through the apertures in the base 4 and through the openings in the rigid porous mesh 3. The effect of this is to secure the implant in position and effectively to seal the implant to the bodily tissues, thereby preventing microbial invasion. The body penetrating structure is provided with a roughened surface and may be coated to facilitate tissue adaptation and sealing. As described previously, the rigidity of the mesh ensures that the ingrown tissue is held in a substantially fixed position relative to the body penetrating structure 2 which in turn prevents damage to the (inevitably limited-strength) bond between the tissue and that structure.

As may be seen from the figure, the collar is sized and located such that the lowermost part of the collar 8 is positioned level with the base of the dermis so that the dermis and epidermis do not come into contact with the rigid ingrowth mesh 3. This is to control epidermal downgrowth and to prevent ingrowth (in the rigid ingrowth mesh) of epidermis and all or part of the dermis, whilst facilitating ingrowth of the lower tissue layers. This arrangement enables microbes and dead cells to be expelled outwards between the dermis/epidermis 61 and the collar 8.

A feeding tube 31 is inserted though the passageway 10 through the body penetrating structure 2. Sealing ring 5 forms a seal between the feeding tube 31 and the interior of the passageway 10.

Fig. 19 shows the second embodiment implanted in a patient. It is implanted in a similar manner to the first embodiment, except that the absence of a flange-like base 4 allows a smaller incision to be made. Indeed, it is possible to install the implant of this embodiment by inserting it base-first into a suitable opening. Thus, only a single incision need be made into the patient. Tissue is then allow to grow through both rigid porous meshes 3 and 25 in order to create a bond between tissue and implant which is sufficient in itself to secure the implant in position.

Fig. 20 shows the sixth embodiment implanted in a patient. Unlike the two embodiments just discussed, it is anchored in a bore in bone 65 by means of the self-tapping thread 52 on the anchoring termination piece 24. The tissue layers 66 above the bone bond to the rigid mesh layers 3, 25 in the manner previously described.

Claims

1. An implantable device comprising a body penetrating structure and tissue ingrowth means, wherein the body penetrating structure is tissue-impenetrable, and the ingrowth means comprises a rigid porous mesh extending around the body penetrating structure along a body penetrating axis.

2. An implantable device as claimed in claim 1, further comprising a collar at the free end adapted to protrude from the body to allow an object to be inserted or attached to the body via the implantable device.

3. An implantable device as claimed in claim 2, wherein the body penetrating structure and the ingrowth means depend from the collar in the axial direction.

4. An implantable device according to claim 1, 2 or 3, wherein the body penetrating structure is cylindrical or tubular.

5. An implantable device according to any preceding claim, wherein the ingrowth means comprises first and second rigid porous meshes, the second mesh encircling the first rigid porous mesh.

6. An implantable device according to claim 5, wherein the first mesh has a first mesh pattern and the second mesh has a second mesh aperture pattern and first and second mesh aperture patterns are the same.

7. An implantable device according to claim 5, wherein the first mesh has a first mesh pattern and the second mesh has a second mesh aperture pattern and first and second mesh aperture patterns differ.

8. An implantable device according to claim 5, 6 or 7, wherein the first rigid porous mesh and the second rigid porous mesh are rigidly connected to each other at a plurality locations along the body-penetrating axis.

9. An implantable device according to claim 5, 6 or 7, wherein the first rigid porous mesh and the second rigid porous mesh are free of radial interconnections except at their axial ends.

10. An implantable device according to any of claims 5 to 9, wherein at least some, preferably all, of the mesh apertures of the first mesh aperture pattern are smaller than the aperture area of at least some, preferably all, of the mesh apertures of the at least one second mesh aperture pattern.

11. An implantable device according to any preceding claim, wherein the area or shape of a mesh aperture of a or any mesh aperture patterns are identical or different along the body penetrating axis of any of the first and second rigid porous mesh.

12. An implantable device according to any preceding claim, wherein the body-penetrating structure has a free end and an opposite end, and the aperture area of a mesh aperture of any of the first mesh aperture pattern (or second mesh aperture pattern if provided) is largest at the free end of the body penetrating structure.

13. An implantable device according to any preceding claim, wherein the aperture area of the mesh apertures increases gradually from the second end towards the free end of the body penetrating structure.

14. An implantable device according to any preceding claim, wherein more than two porous meshes are provided and are arranged at increasing distance from the body-penetrating axis of the body penetrating structure.

15. An implantable device according to any preceding claim, wherein the device has a base portion positionable inside the body, preferably the base portion is a flange or a screw threaded protrusion.

16. An implantable device according to claim 1, wherein the device is made of a biocompatible material, for example titanium, titanium alloy, other metals, polyester ceramic or polymer coated with titanium.

17. An implantable device according to any preceding claim, wherein the mesh apertures are made by laser-cutting, electron beam melting or by selective metal sintering or by a method where a metal that dissolves is used thereby creating the porous structure, powder injection moulding, or metal injection moulding.

18. An implantable device according to any preceding claim, wherein the free end of the hollow body penetrating structure has a sealing ring or a gasket.

19. An implantable device according to any preceding claim, wherein the device is a percutaneous device, a tissue access device, a body cavity access device, a power and signal conduit, an internal or external prosthetic device.

20. An implantable device for implantation into a human or animal body, the device having a body-penetrating axis with an exterior end and an interior end for location inside the body located along the body penetrating axis, the implant comprising a void defined by an impermeable body penetrating structure and providing a passageway or interior space within the hollow implant surrounded by permeable ingrowth material, wherein the ingrowth material extends in the body-penetrating direction to enable ingrowth of body tissue in order to firmly secure the implant, and wherein the interior end has a diameter not substantially larger than the exterior end.

21. An implantable device as claimed in claim 20, wherein the implant is free of any radially-extending flange or other similar radially-extending anchor.

22. An implantable device as claimed in claim 20 or 21, wherein ingrowth material is in the form of a cylinder.

23. An implantable device as claimed in claim 20, 21 or 22, wherein the ingrowth material comprises a rigid or substantially rigid mesh

24. An implantable device as claimed in any of claims 20 to 23, wherein the implant further comprises a circular collar at the exterior end and a circular base at the interior end the mesh is attached to the collar and base.

25. An implantable device as claimed in any of claims 20 to 22, wherein the ingrowth material itself defines the void such that tissue may grow through it into contact with further body tissues within the void.

26. An implantable device for implantation into a human or animal body, the device having a body-penetrating axis with an exterior end and an interior body-penetrating end located thereon, the implant comprising a void defined by an impermeable body-penetrating structure surrounded by an impermeable collar at the exterior end and by permeable ingrowth material extending from the collar towards the interior end, the ingrowth material being arranged to enable ingrowth of body tissue in order to firmly secure the implant, and the collar being arranged to be located partially within the body such that ingrowth of the epidermis is prevented.

27. A method of implanting an implant comprising providing an implant as claimed in claim 26, wherein the implant is implanted such that ingrowth of the epidermis is prevented by the collar.

28. A method as claimed in claim 27, wherein the base (interior end) of the collar is implanted substantially level with the interface between the subcutaneous fat and the skin.

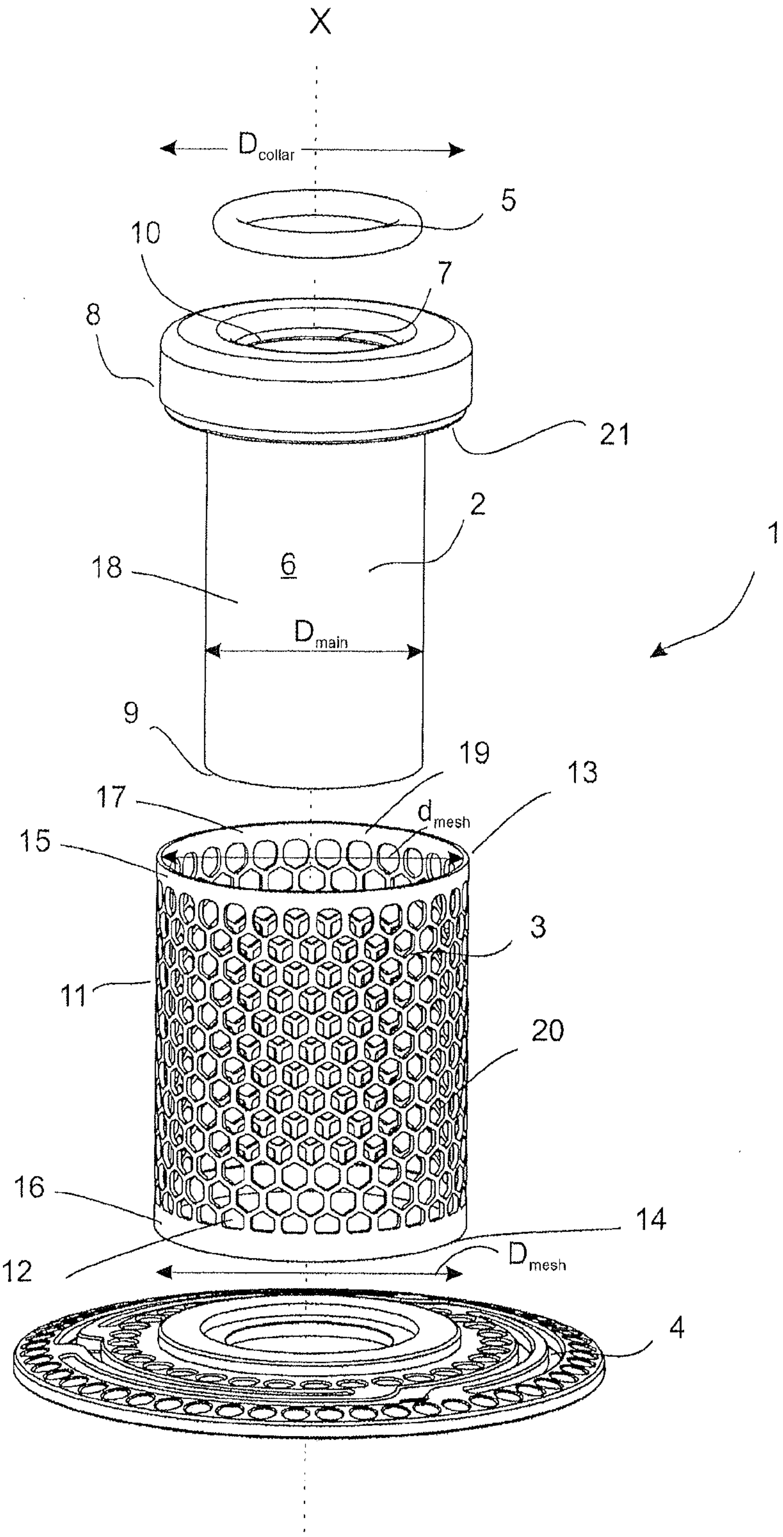
X
D_{collar}
5
10
7
8
21
2
1
18
6
D_{main}
9
19
13
17
d_{mesh}
15
3
11
20
16
14
12
D_{mesh}
4

Fig. 1

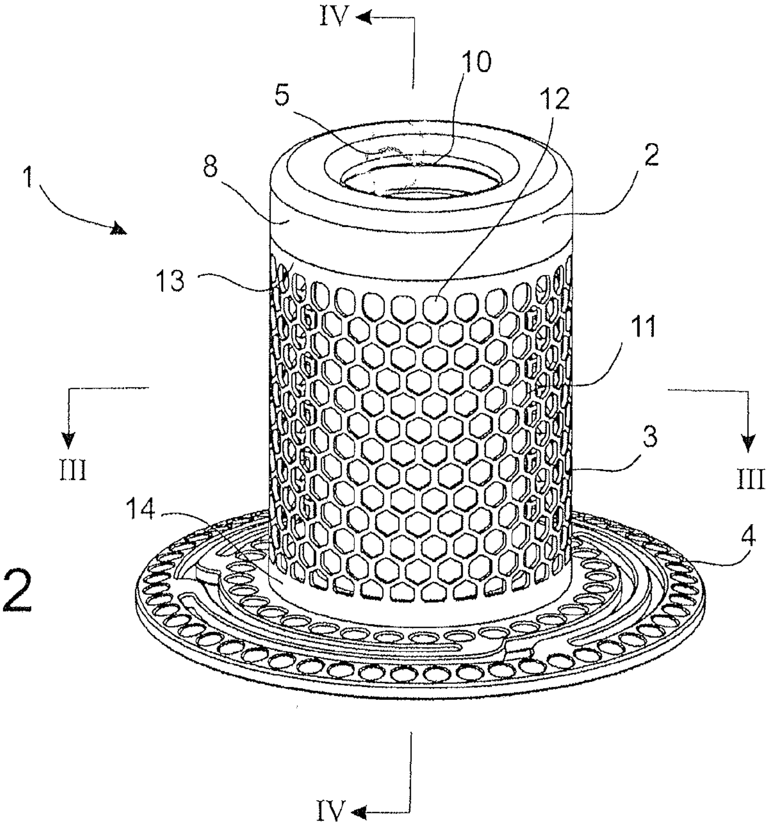

Fig. 2

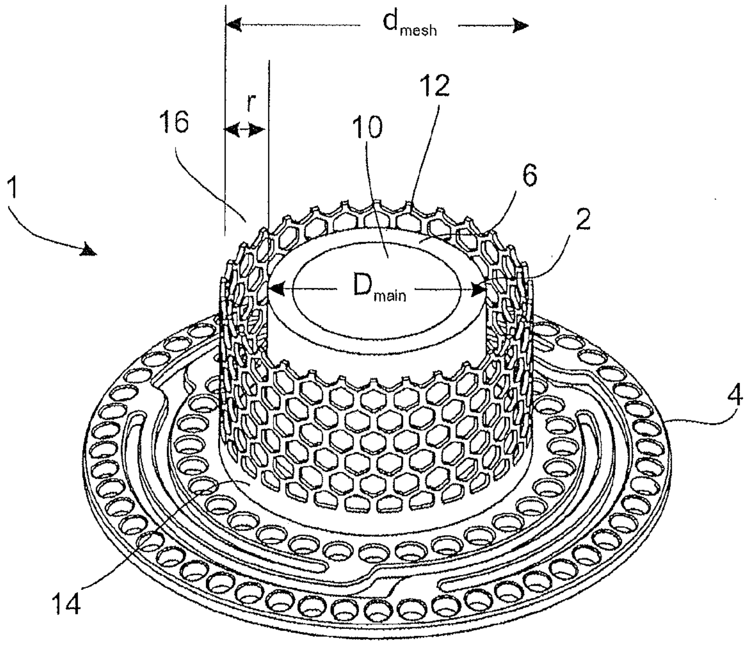

Fig. 3

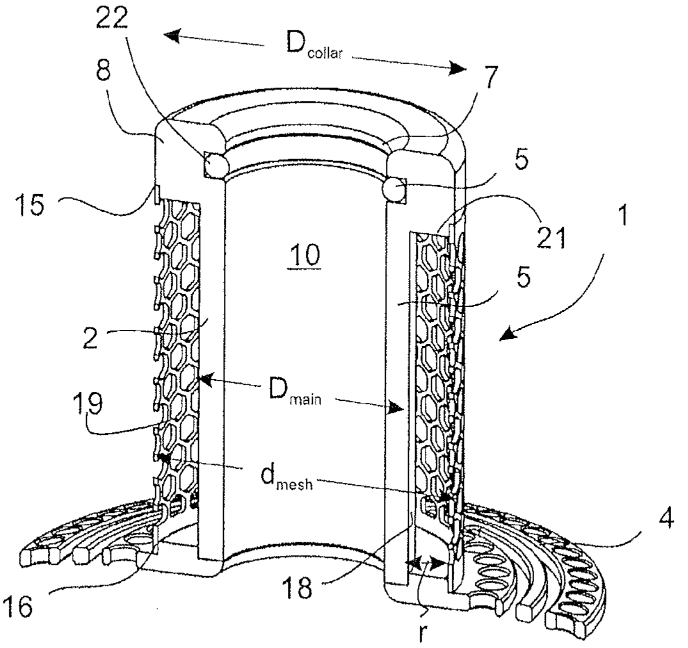
22
D_{collar}
8
7
5
15
21
1
10
5
2
D_{main}
19
d_{mesh}
4
18
16
r

Fig. 4

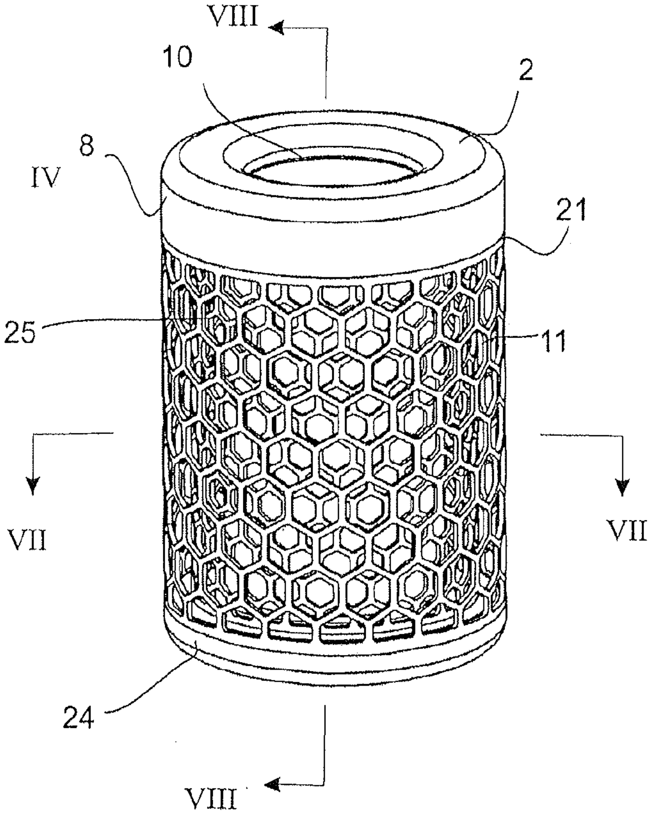
VIII
10
2
8
IV
21
25
11
VII
VII
24
VIII

Fig. 6

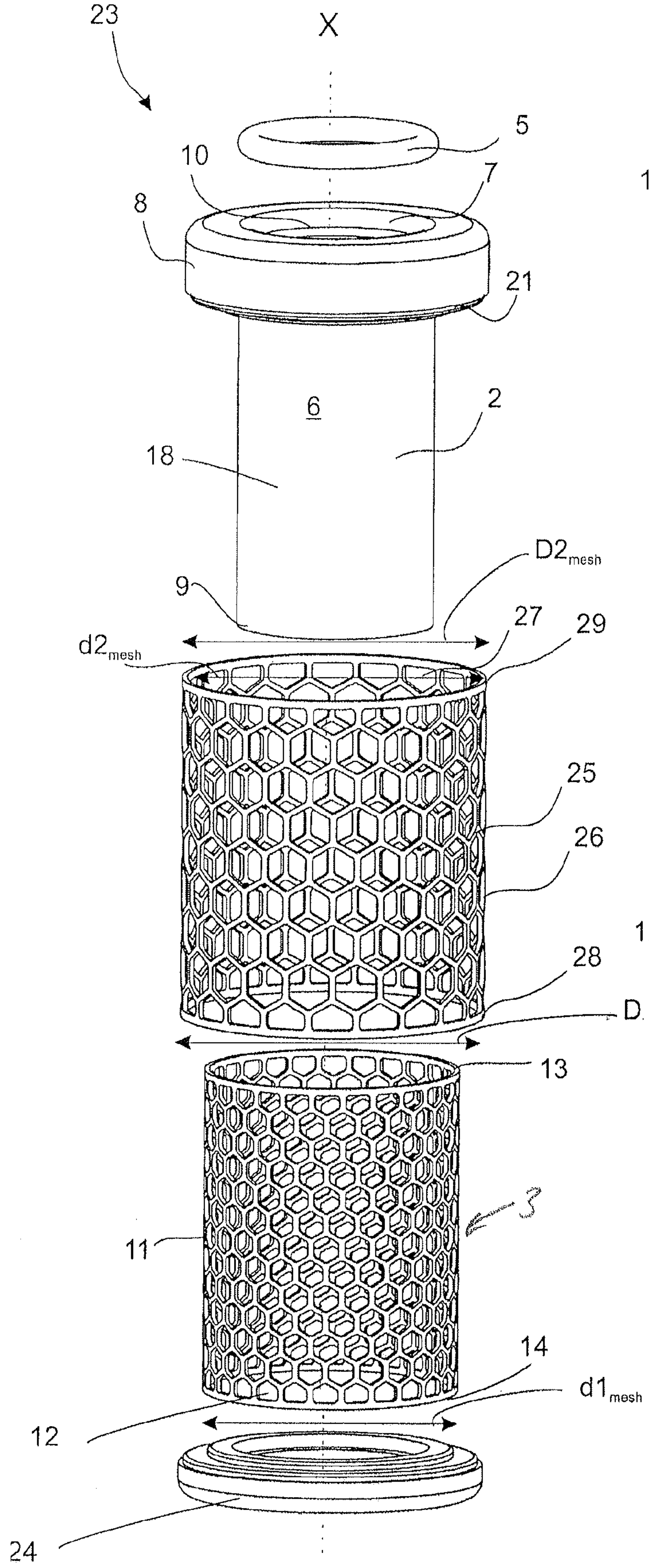

Fig. 5

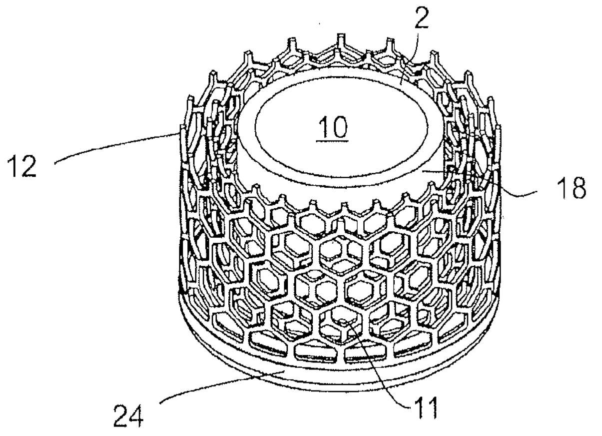

Fig. 7

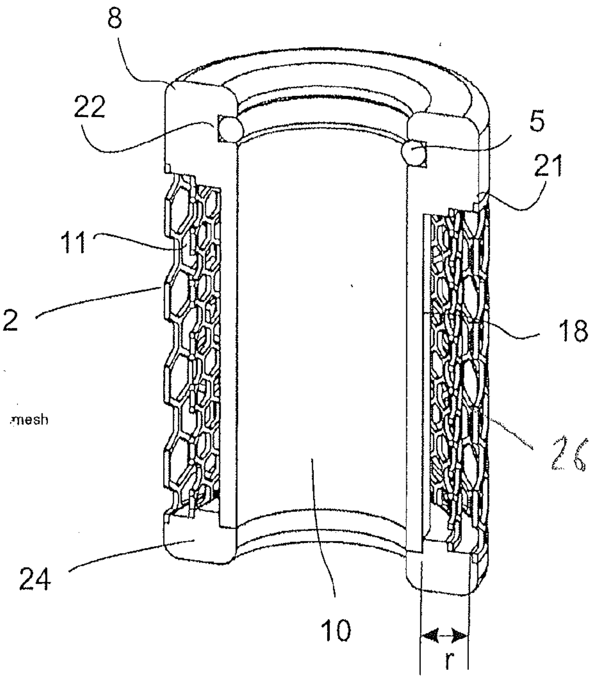

Fig. 8

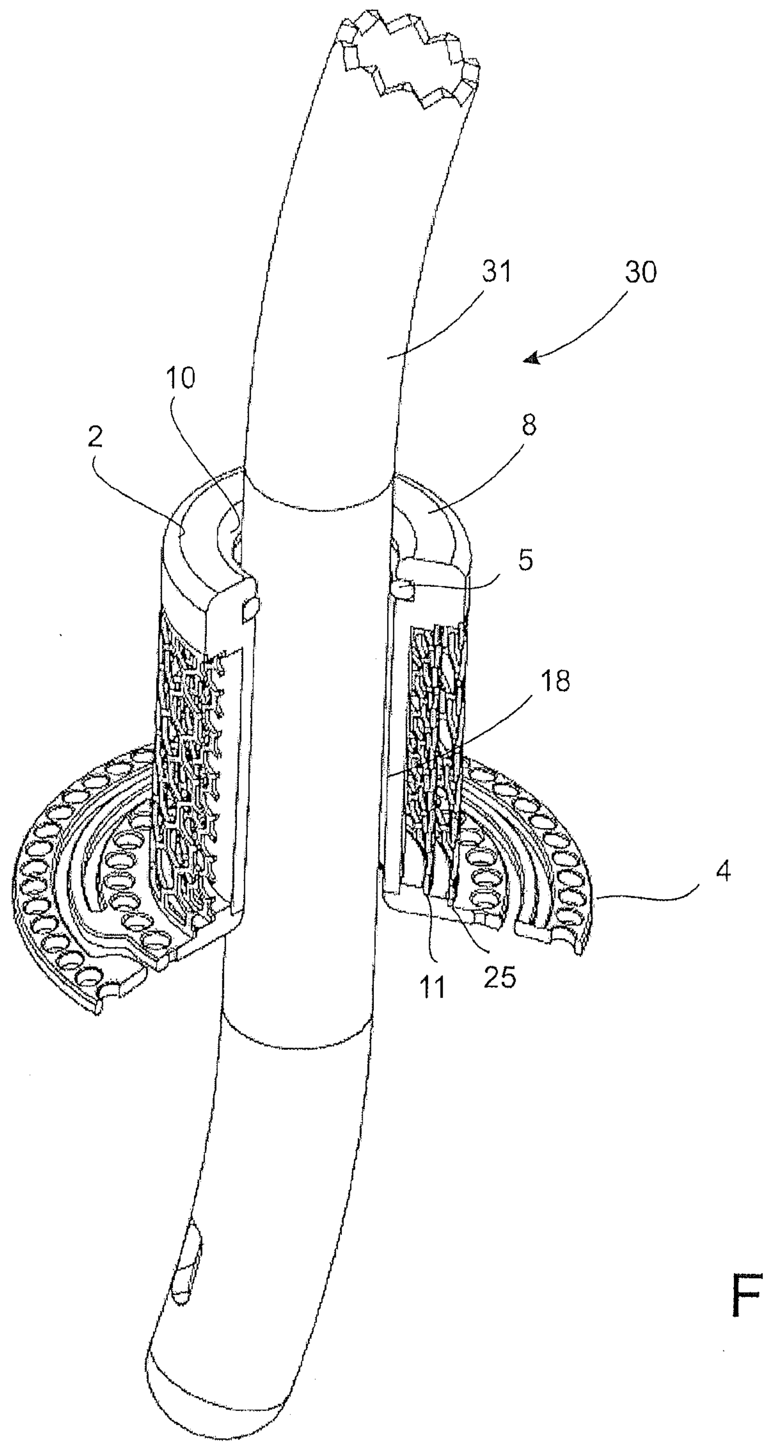

Fig. 9

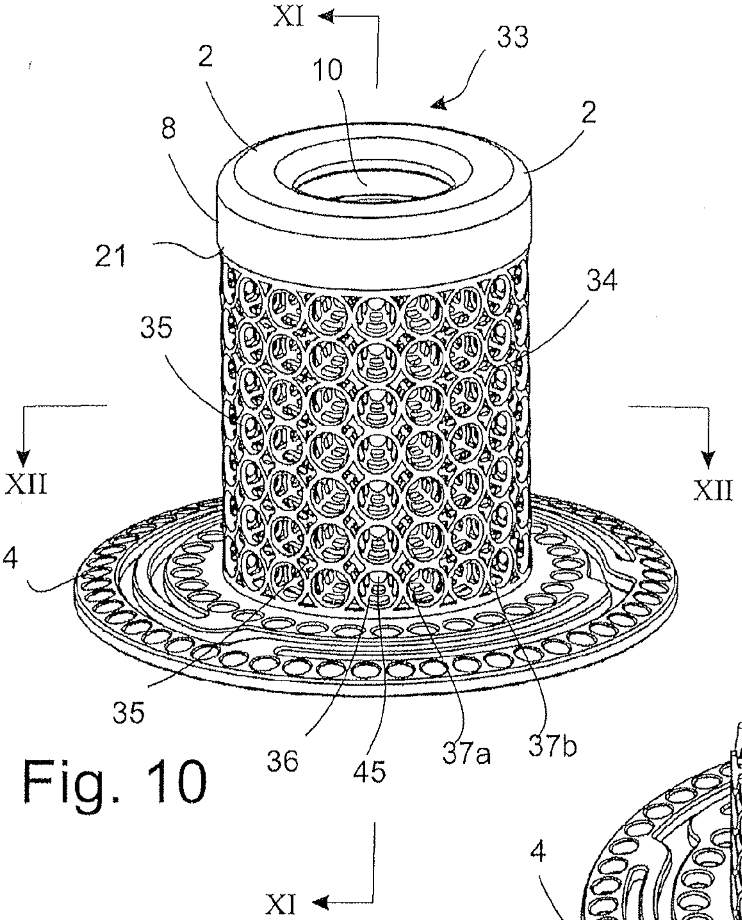

Fig. 10

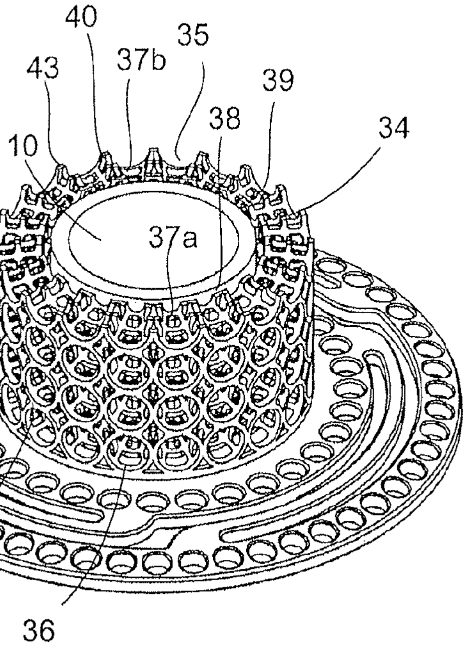

Fig. 12

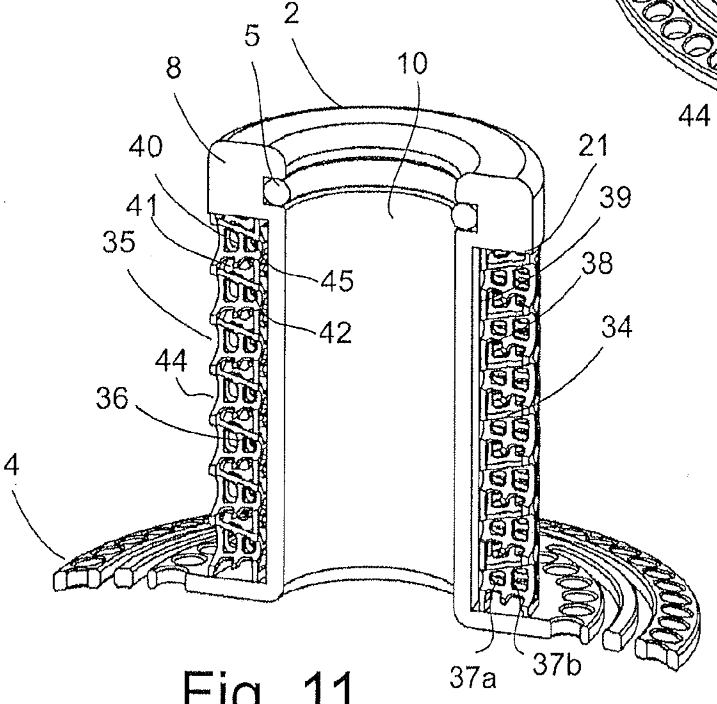

Fig. 11

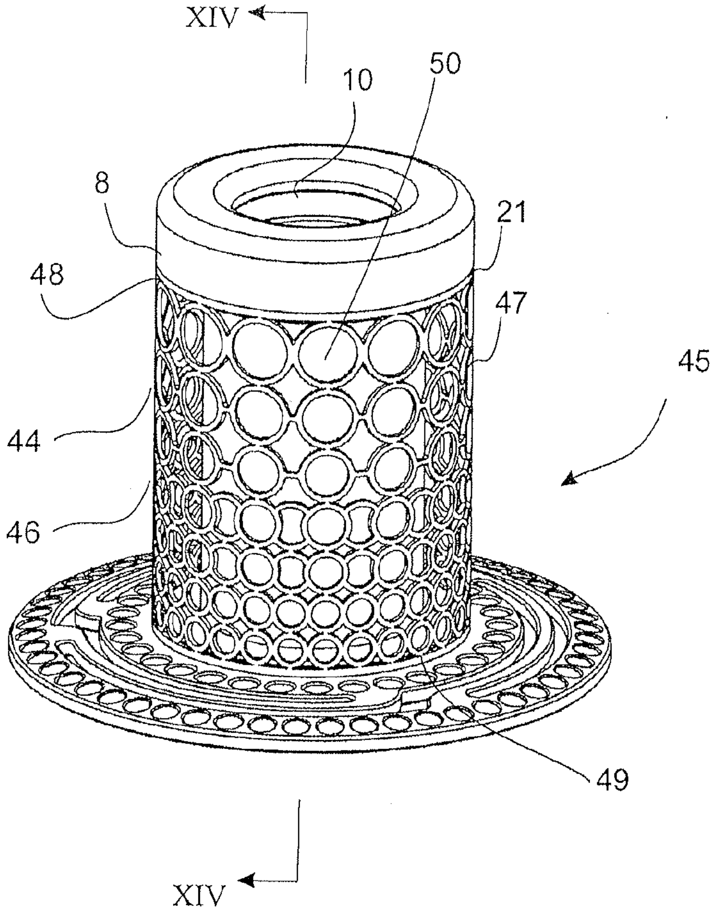

Fig. 13

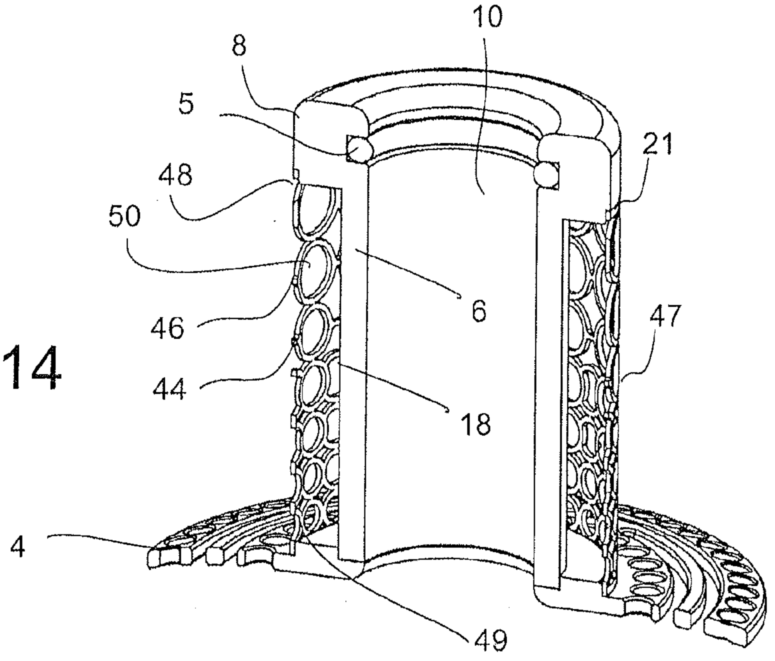

Fig. 14

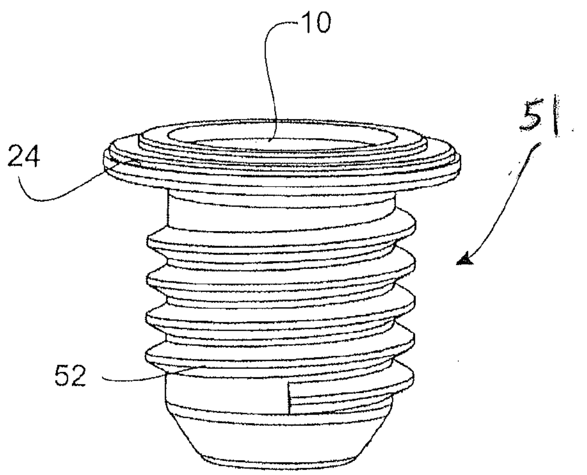

Fig. 16

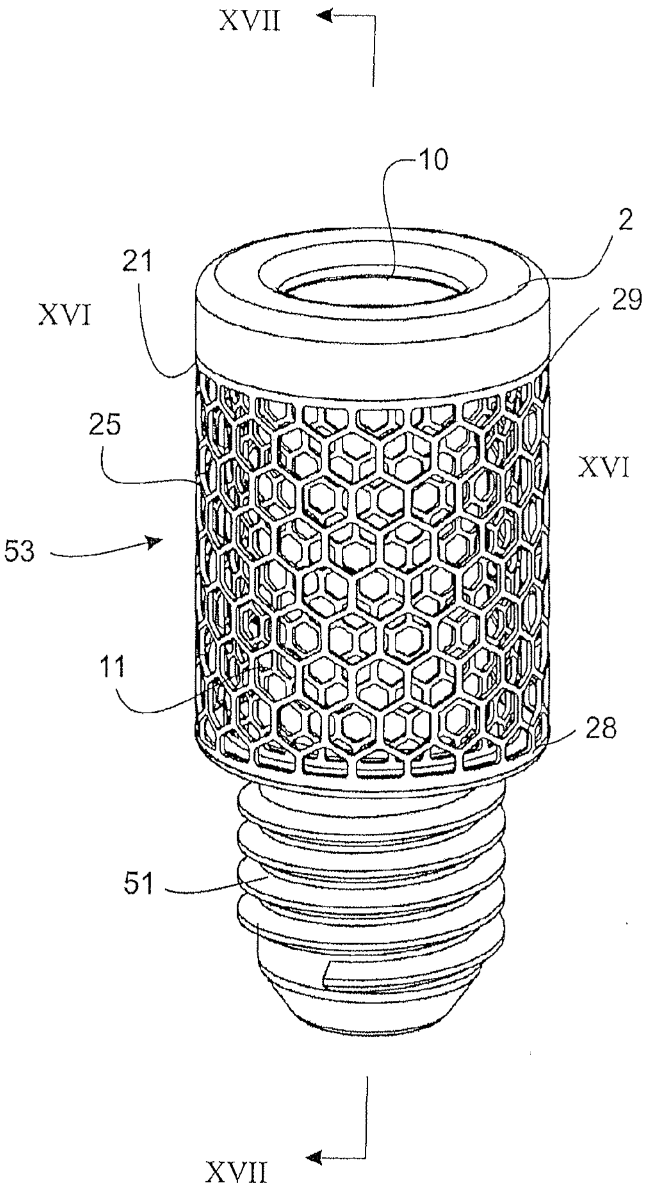

Fig. 15

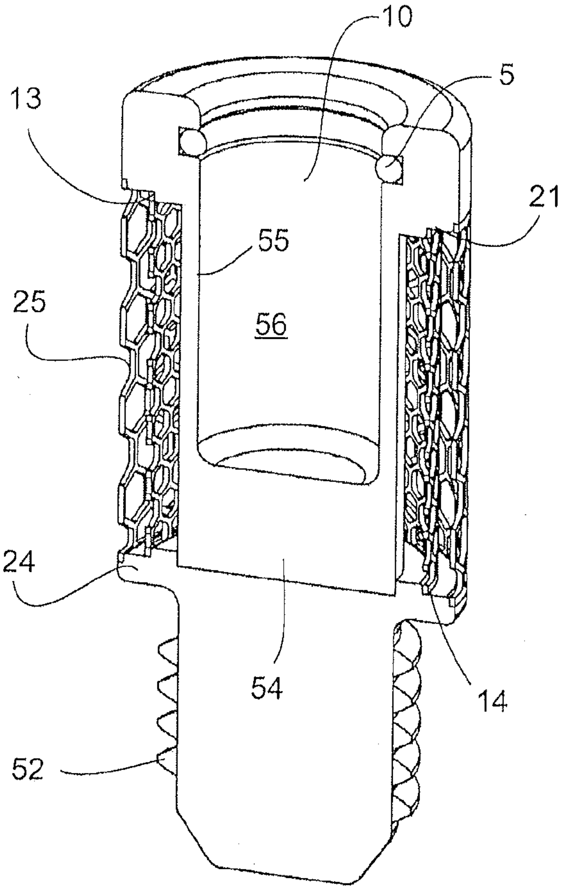

Fig. 17

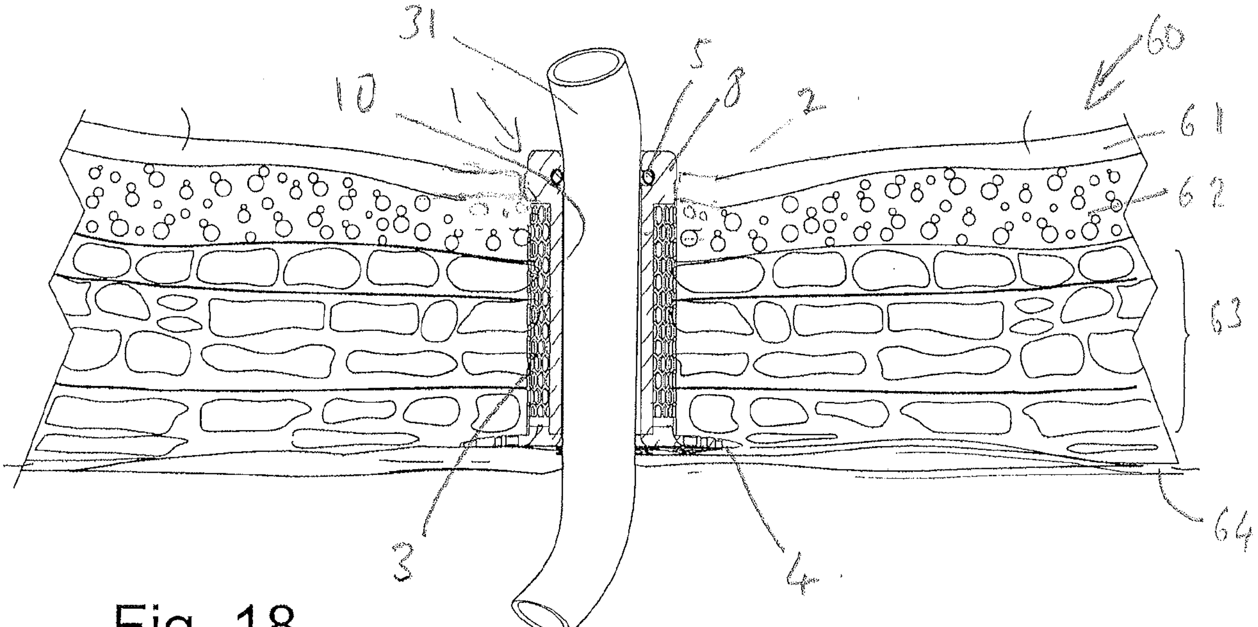

Fig. 18

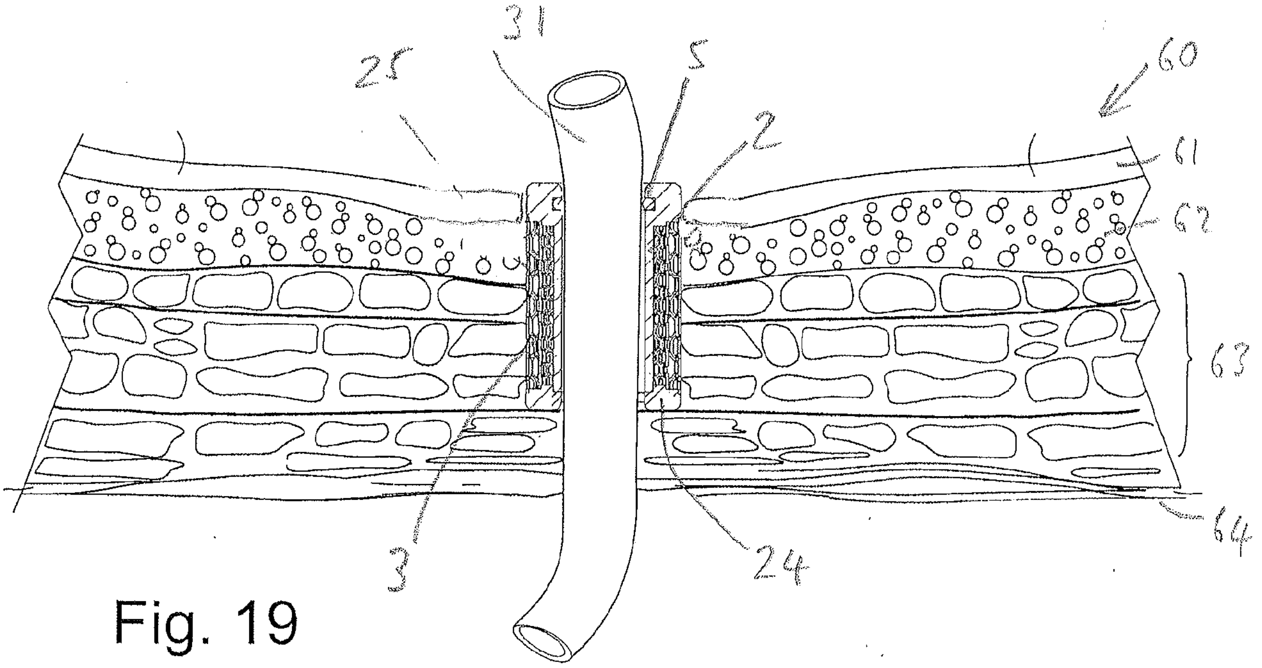

Fig. 19

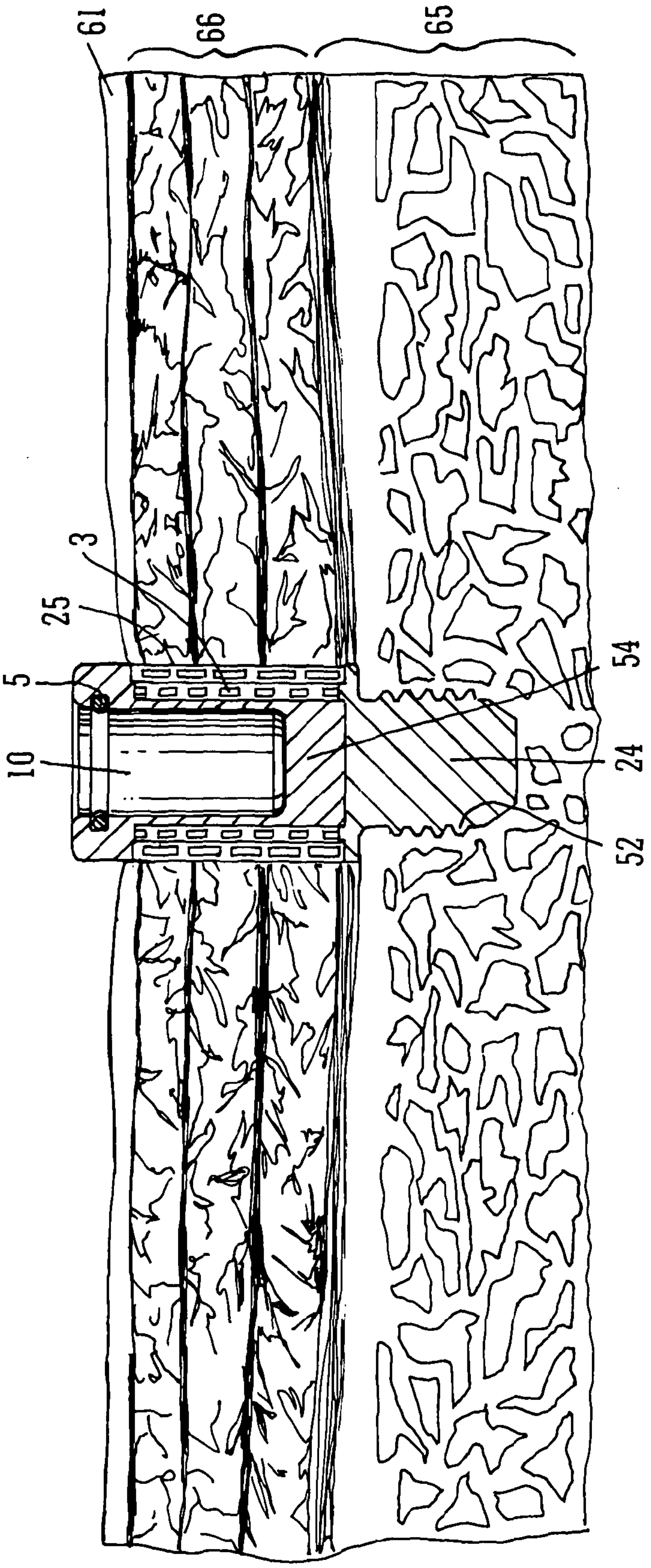

FIG. 20