June 10, 1952 H. W. WHITMORE 2,599,733

HERMETIC SEALING MEANS BETWEEN INNER AND OUTER CASINGS OF REFRIGERATOR CABINETS

Filed July 10, 1950 2 SHEETS—SHEET 1

FIG. 1.

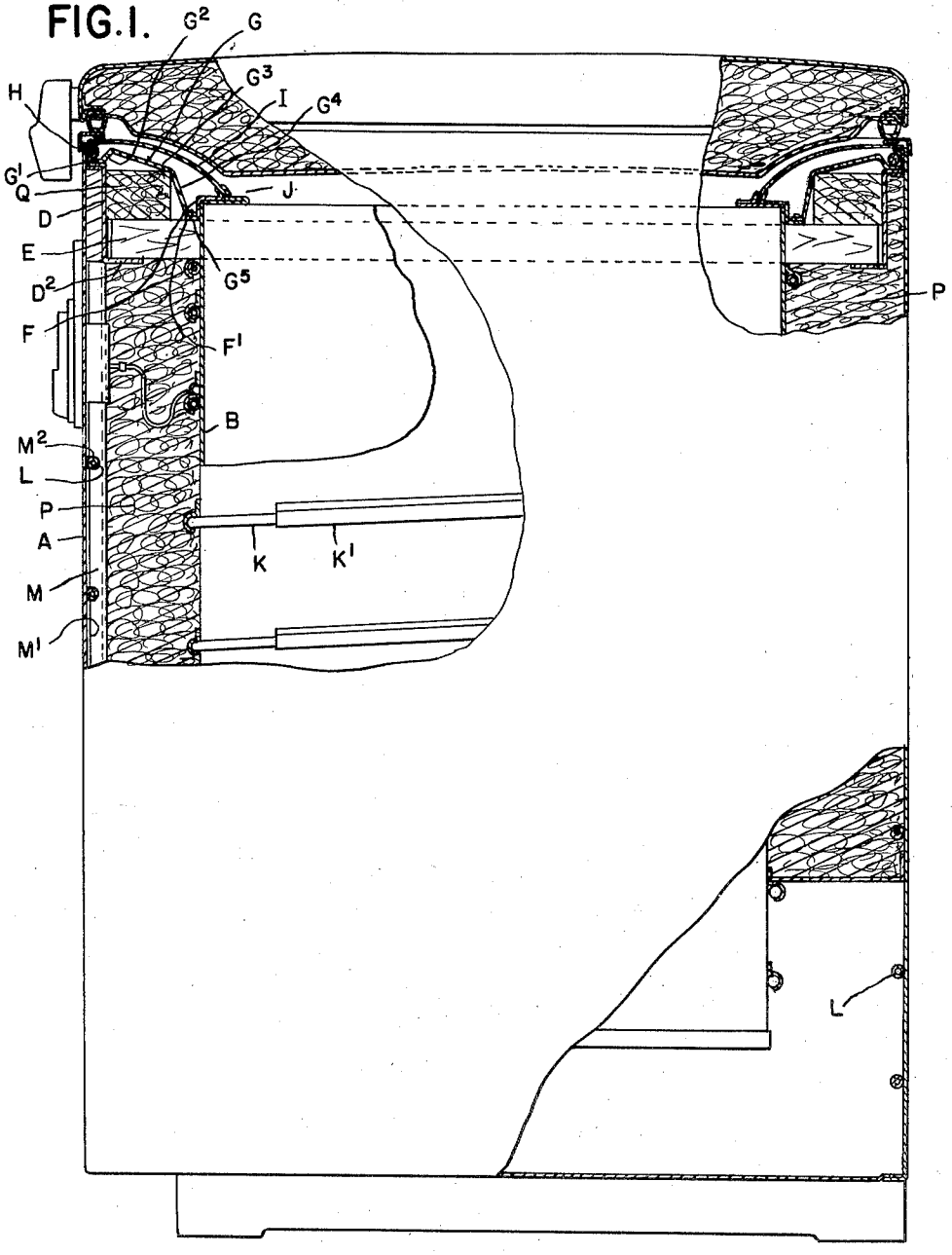

INVENTOR.
HARLAND W. WHITMORE
BY
Whittemore Hulbert & Belknap
ATTORNEYS

June 10, 1952 H. W. WHITMORE 2,599,733

HERMETIC SEALING MEANS BETWEEN INNER AND OUTER CASINGS OF REFRIGERATOR CABINETS

Filed July 10, 1950 2 SHEETS—SHEET 2

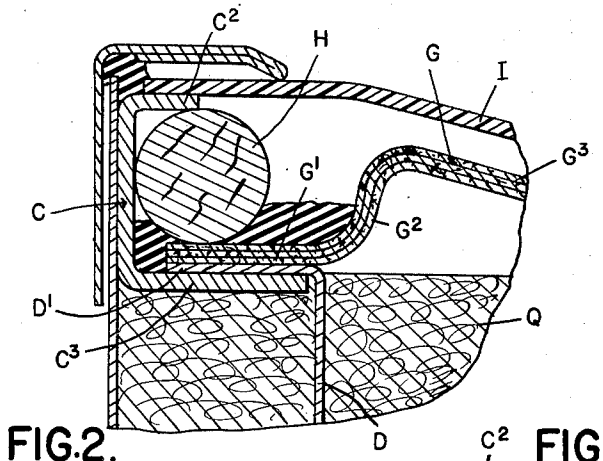

FIG.2.

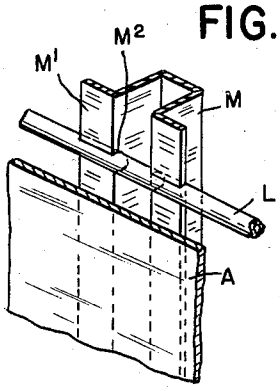

FIG.5.

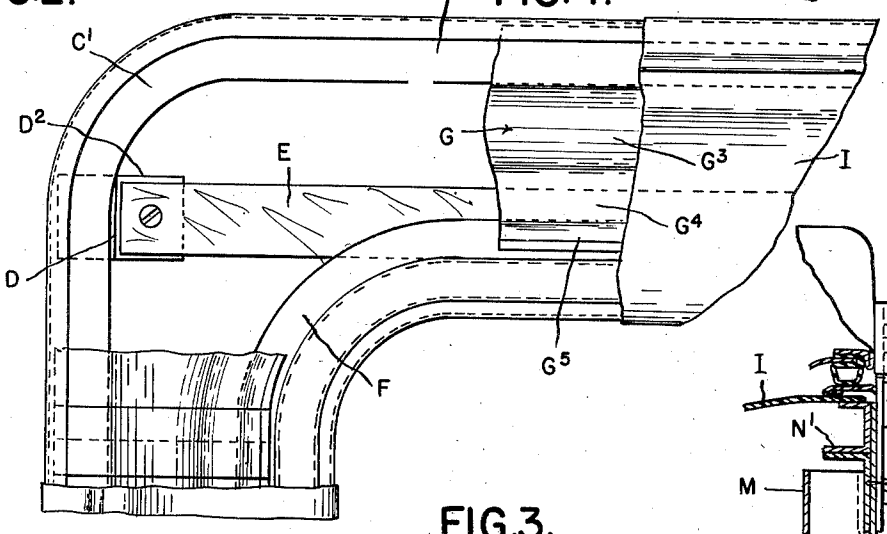

FIG.4.

FIG.3.

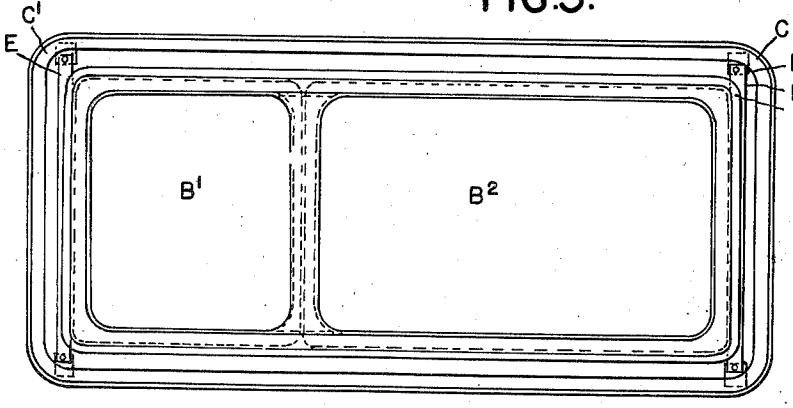

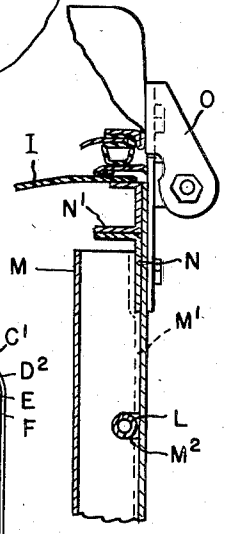

FIG.6.

INVENTOR.

HARLAND W. WHITMORE

BY

Whittemore Hulbert & Belknap

ATTORNEYS

Patented June 10, 1952

2,599,733

UNITED STATES PATENT OFFICE

2,599,733

HERMETIC SEALING MEANS BETWEEN INNER AND OUTER CASINGS OF REFRIGERATOR CABINETS

Harland W. Whitmore, Kenosha, Wis., assignor to Motor Products Corporation, Detroit, Mich., a corporation of New York

Application July 10, 1950, Serial No. 172,838

5 Claims. (Cl. 62—116)

1

The invention relates to refrigerators of that type in which the inner casing or lining is used for absorption of heat from the chamber and contents therein. This requires the placing of the evaporator tubes in heat exchange relation to this inner casing and in the space between the same and the outer casing, which also holds the thermal insulating material. One defect in constructions of this type is that the evaporator tubes and outer surface of the inner casing sometimes become frosted which reduces their heat absorption efficiency. To guard against this the chamber between the outer and inner casings must be hermetically sealed as otherwise, due to the law of diffusion of gases, there will be an exchange of atmosphere from within and without this chamber, and the moisture content of the incoming air will cause the frosting. As heretofore constructed the attempt has been made to obtain a hermetic seal but the unavoidable expansion and contraction of the structural elements due to changes in temperature may result in the breaking of the seal, and even a very small opening will in time produce the frosting.

It is one of the objects of the invention to obtain a construction in which the hermetic seal will be maintained throughout the life of the structure so as to absolutely preclude entrance of moist air into the chamber in which the evaporator tubes are located.

It is a further object to obtain a construction in which substantially all of the heat exchange elements are located within this hermetically sealed chamber including the condenser tubes, which latter are held in heat conducting relation with the outer casing.

Still further it is an object to obtain a construction in which some of the structural elements of the cabinet are also used for maintaining good thermal conductivity between heat exchange elements.

With these and other objects in view the invention consists in the construction as hereinafter set forth.

In the drawings:

Fig. 1 is a vertical cross section partly in elevation through my improved refrigerator;

Fig. 2 is an enlarged section of a portion of Fig. 1;

Fig. 3 is a plan view of the body of the refrigerator with the breaker strip removed;

Fig. 4 is an enlarged plan view of the corner portion of the body showing the breaker strip and also the sealing means broken away to disclose parts thereunder;

2

Fig. 5 is a perspective view showing a reinforcing channel bar for the outer casing and a portion of the condenser tube secured in the notch in said bar; and

Fig. 6 is a vertical section through the upper portion of the reinforcing bar shown in Fig. 5.

Both the outer and the inner casings A and B are preferably formed of sheet metal and are spaced from each other to form a chamber therebetween containing the heat exchange elements and the thermal insulation. The inner casing must be mechanically supported from the outer casing and also, as above set forth, the space between these casings must be hermetically sealed, which is accomplished as follows. Secured to the outer casing at the top thereof and extending completely around the same is a frame formed of channel bars C having rounded corner portions C'. The web portion of this channel is spot welded to the casing and the flanges extend inward, with the upper and lower flanges C^2 and C^3 extending inward therefrom. D are Z-shaped bracket members supported from the flange C^3 at spaced intervals, the upper flange D' of the bracket resting on said flange C^3 and the lower flange D^2 forming a shelf. E are members preferably formed of wooden strips, which extend across opposite ends between the brackets D and the inner casing B. Angle bars F secured to the upper edge portions of the inner casing B rest upon the strips E and through the latter and the brackets D form the mechanical support for said inner casing, which is also low in thermal conductivity. For forming the hermetic seal, I preferably use a member G formed of paper or other fibrous material impregnated with a thermo-plastic material, such as asphaltum. This member extends completely around the outer and inner casing and is fashioned to have a flange G' overlapping the brackets D and flange C^3. Also an upturned portion G^2, angling portions G^3 and G^4 and an inner flange G^5 rest on the angle bar F. This particular contour is not essential but provides space beneath the member for receiving insulation blankets. The flanges G' and G^5 are, respectively, sealed to the members C and F by hot asphaltum, which fills all crevices and when solidified forms an effective seal. However, to insure that the seal will be maintained wedge members H, preferably short length wooden bars of rounded cross section, are inserted between the flange G' and the upper flange C^2 of the member C. These are placed in position while the asphaltum is still hot so that when it is cooled they will be retained

in such position, and will hold the flange G' against breaking away from the flange C^3 when subjected to mechanical stresses or vibrations. The usual breaker frame I formed of a molded plastic extends from the top of the flange C^2 inward to overlap the inner casing B. There is also a member J, preferably of the same material as the member G, which extends between the inner end of the frame I and the casing B to seal any space therebetween, being secured to flanges F' on the angle bar F.

The evaporator tubes K surround the inner casing B and are positioned thereon and secured thereto by hook strips K'. The condenser tubes are also within the space between the casings A and B and are secured to the former in the following manner. Said condenser tubes L are first coiled or fashioned to extend around and fit within the outer casing A, after which they are held in position and in contact with said outer casing by reinforcing bars M. These bars are preferably of channel cross section having outwardly extending flanges M', which flanges are notched or cut-away at M^2 to receive the convolutions of the condenser tubes and position the same. The flanges M' may then be spot welded to the inner face of the outer casing, thereby reinforcing the latter and also holding the condenser tubes in contact therewith. The upper ends of the bars M at the rear side of the casing have the flanges M' slightly offset to receive a cross plate N, which is welded thereto. This cross plate N forms a support for the hinge members O which attach the top or lid of the refrigerator to the cabinet. It is also preferably provided with an angle flange N' which abuts the lower flange C^3 of the channel bar C to form additional reinforcement.

The inner casing B is preferably formed in two sections B' and B^2 to form chambers which may be maintained at different temperatures. The section B^2 is of less depth than the section B' and provides a space thereunder for location of the motor compressor and any other mechanism. Thermal insulating material P fills the space between the casings and the evaporator and condenser tubes therein. There are also blanket insulators Q placed above the strips E and between the same and the sealing member G. Thus in operation the heat abstracted from the inner casing is dissipated through the outer casing, and the thermal insulating material between the casing limits direct flow of heat therebetween.

What I claim as my invention is:

1. In a refrigerator, including outer and inner spaced casings, evaporator tubing in heat exchange relation to said inner casing located in the space between the same and said outer casing, a mechanical support for said inner casing from said outer casing, and independent sealing means between said casings; condenser tubing in the space between said casings and vertically extending flanged channel reinforcing bars for said outer casing having their flanges secured thereto and notched to embrace said condenser tubing and to hold the same in heat exchange relation to said outer casing.

2. In a refrigerator an outer casing formed of sheet metal, a channel member extending around the upper end portion of said casing within the same forming a reinforcement therefor, and a plurality of vertically extending reinforcement members, each formed of a channel bar having outwardly extending flanges abutting the inner face of the metallic casing and secured thereto by spot welding, said bars having the flanges thereof cut away and the adjacent portion notched to receive tubes of a condenser coil which are held thereby in heat exchange relation to said cabinet wall, the upper ends of said channel bars abutting against the transversely extending channel bar reinforcement and the flanges of each vertical channel bar being inwardly offset adjacent to said transverse channel, and a transversely extending reinforcing plate between said offset portion and casing forming a reinforcement for a hinge connection.

3. In a refrigerator cabinet including outer and inner spaced casings open at one end, mechanical means other than a breaker strip for supporting the inner casing from the outer near the upper ends thereof, and an evaporator in heat conducting relation to said inner casing located between the same and the outer casing; means for permanently sealing the space between said casings from any gaseous communication with the external atmosphere, comprising a continuous annular member formed of flexible sheet gas-impervious material extending around and between the open end portions of said casings, ledges projecting from said casings overlapped by the marginal portions of said annular member, plastic sealing means cementing and securing said marginal portions to said ledges and casings, and a breaker frame between said casings covering and protecting said sealing means.

4. The construction as in claim 3 in which the ledge on the outer casing is formed by the inner flange of a channel bar frame, the outer flange of which engages said breaker frame, and a series of wedges in the channel between the outer flange and said annular member for clamping the latter to said inner flange forming additional securing means therefor.

5. The construction as in claim 4 in which the flexible gas impervious annular member is formed of asphaltum impregnated paper.

HARLAND W. WHITMORE.

REFERENCES CITED

The following references are of record in the file of this patent:

UNITED STATES PATENTS

Number	Name	Date
Re. 17,931	Smalley	Jan. 13, 1931
1,859,840	Phelps	May 24, 1932
1,908,248	Hull	May 9, 1933
1,964,795	Frary	July 3, 1934
1,973,880	Moody	Sept. 18, 1934
1,987,422	Steenstrup	Jan. 8, 1935
2,432,042	Richard	Dec. 2, 1947
2,543,196	Phillip	Feb. 27, 1951