July 16, 1935. G. O. CARLSON 2,007,954

ACID HANDLING EQUIPMENT AND METHOD OF PRODUCING THE SAME

Filed April 21, 1932

Fig. 1.

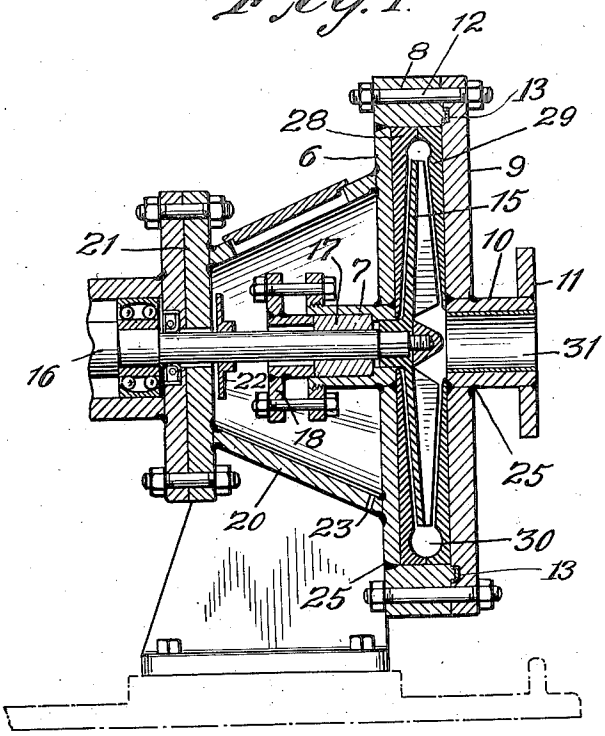

Fig. 2.

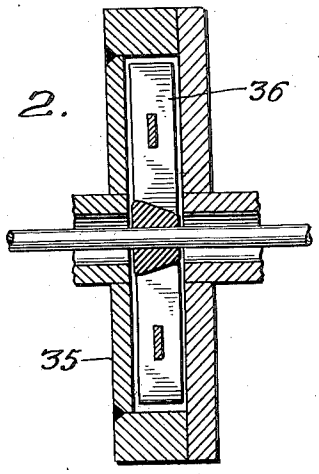

INVENTOR
Gunard O. Carlson
BY
Hammond & Littell
ATTORNEYS

Patented July 16, 1935 2,007,954

UNITED STATES PATENT OFFICE

2,007,954

ACID HANDLING EQUIPMENT AND METHOD OF PRODUCING THE SAME

Gunard O. Carlson, Chester, Pa.

Application April 21, 1932, Serial No. 606,563

15 Claims. (Cl. 29—156.8)

The present invention has for an object to provide durable equipment for handling acid and other corrosive substances which can be manufactured expeditiously and economically.

The invention has been evolved in connection with the development of an acid handling centrifugal pump and for convenience such an embodiment of the invention will be described to illustrate the principles involved, but it will be understood that the particular description is illustrative merely and is not intended as defining the limits of the invention.

Iron and steel compositions and other metal alloys have been developed which will effectively resist the attacks of various acids, and centrifugal pumps have been manufactured of such materials. For example, acid pumps have been constructed in which the several parts were made of cast chromium-steel or other corrosion-resisting alloys. Because of the porosity and defects of castings, such pumps as well as other equipment, are subject to leakage, some times appearing immediately and some times developing after the pumps have been installed and used for some time. The manufacture of the equipment from wrought or forged metal has been subject to other difficulties, notably the expense of necessary dies.

When the composition of the iron or steel is properly selected for the particular acid or other material being handled the principal wear, so far as the flow of liquid within the pump is concerned, is due to erosion rather than corrosion.

The present invention provides an arrangement in which there are obtained the advantages of the use of cast metal in contact with the flowing acid together with the advantages of wrought metal for the casing and other parts by a design such that the leakage of acid is in all cases resisted by worked and compacted metal which is free from porosity such as occurs in castings.

In order to avoid as far as possible the possibility of electrolytic action it is desirable that the steel or other metal of the fabricated casing and of the cast lining should be of substantially the same chemical composition, and this applies also to any additional metal introduced for the purpose of welding. In the composition of the metals used, however, account should be taken of the losses to be expected in the operation including the casting, rolling and welding operations in order that the ultimate analyses rather than the initial analyses may be the same.

The nature and objects of the invention will be better understood from a description of a particular illustrative embodiment for the purpose of which description reference will be made to the accompanying drawing forming a part hereof and in which:

Figure 1 is a sectional view of a centrifugal pump constructed in accordance with the invention, and

Figure 2 is a sectional view showing another type of rotor for a centrifugal pump and a slightly different arrangement of cast and forged metal.

The pump shown for the purposes of illustration is fabricated from rolled sheets and other wrought material with certain of the inner acid-contacting parts formed of cast metal.

Referring more particularly to the pump of Figure 1, the rotor casing is formed in two parts. One part comprises the side wall 6 secured on a central sleeve 7 with an outer rim member 8, and the other part comprises a side member 9, secured to a sleeve 10 constituting the inlet and in turn carrying a flange 11 to facilitate connection to a supply pipe. The two parts are secured together by suitable bolts 12 with an acid-proof packing 13 between the parts. Within the casing a rotor 15 of cast metal is carried on a main shaft 16. This shaft extends out through the sleeve 7 through an acid-proof packing 17 held in place by any suitable tightening means such as the gland 18 shown. A tapered member 20 which may be formed of rolled sheet metal extends laterally from the face plate 6 to form a casing which may catch any acid leaking past the packing 17 and along the shaft 16. The outer end of the member 20 is closed by plate 21. Within this supplementary casing formed by the member 20 a drip disk 22 is secured to the shaft 16 to prevent as far as possible the acid flowing further along the shaft. At the bottom of the supplemental casing a drip outlet 23 is provided from which any acid leaking into this casing may be drawn off. The outer casing member, including the supplemental casing, is formed of acid-resisting metal of forms in which it is readily procurable, mainly rolled sheets. The separate parts are all connected by welding as indicated at 25 throughout the drawing. Preferably the electric welding processes are used and wherever additional metal is added for welding purposes it is the same composition as that of the plates to be connected. When possible the welding is performed in a neutral atmosphere.

When the welding of the joints is completed the metal at and near the joints, because of the effect of the necessary heating and addition of molten metal during the welding, may be, and with many compositions, will be subject to the

attack of acid. If, however, the metal at the welds is subjected to suitable heat treatment, this metal again becomes thoroughly acid-proof. The structure of some steels, such, for example, as the 18% chromium 8% nickel and the 20% chromium 20% nickel is probably of austenitic structure when properly heat treated to provide corrosion resistance. Preferably the whole casing, after the welding is completed and the casing is cooled, is thoroughly annealed or otherwise heat-treated as the particular steel, iron or other metal used may require. Local heat treatment at the joints may be substituted, but a uniform treatment of the whole provides more reliable results. This treatment will render the welded joints thoroughly acid-proof, causing them to have the same character as the remainder of the material. This annealing also relieves stresses caused by welding.

The life of the pump may be considerably extended if the wearing parts of the pump, in the pump shown the parts against which the acid flows, especially where it flows at high velocities, are protected with a removable, replaceable lining. As shown, the rotor casing is lined by two replaceable disks **28**, **29** which may be of cast metal, but of the same chemical composition as that of the outer fabricated casing. As shown these mating members are formed with a volute **30** as is common in the particular type of pump illustrated. This volute connects with a suitable outlet not here shown. The inlet **10** may be lined with a cast metal sleeve **31** of the same metal. The outlet, not shown, may also be similarly lined.

The cast parts, that is to say the rotor **15** and the lining members **28**, **29**, **31** can be economically manufactured and may be replaced as may be necessary. Such porosity as may occur will not be objectionable because any actual leakage will be prevented by the fabricated casing, the material of which is not so subject to this effect. It will be understood that these parts are not necessarily cast but can ordinarily be more economically so made. The rotor especially can in fact be built up of a welded or forged structure if desired, but usually the advantages of so constructing it are not great.

In Figure 2 there is illustrated a pump having a different type of rotor. The casing **35** is built up of rolled metal welded at the joints as in the case of the structure of Figure 1, but this casing is not lined. The rotor **36** is cast and consists of an open structure which operates within the fabricated unlined casing which is not necessarily formed with a volute.

The preferred composition both for the cast rotor and lining parts and for the fabricated outer casing as well as any additional welding metals which may be introduced for welding purposes may be selected in accordance with the dictates of engineering practice. For a nitric-acid pump, for example, a composition containtaining 18% chromium, 8% nickel and 0.07% carbon, with the remainder principally iron, is believed to be most satisfactory. For a sulphuric-acid pump a composition containing 20% chromium, and 20% nickel would probably be preferable. For mine water pumps 18 to 30% chromium without nickel is effective.

Various other compositions including not only the ferrous alloys but other forgeable and weldable alloys suited to the purpose such as, for example, certain corrosion-resisting bronze alloys, Monel metal and aluminum may be used. If because of manufacturing requirements or for other reasons it is desired to avoid the necessity for heat treatment the metal used should be so selected that the welding operation leaves the metal as little subject to corrosion as possible.

The foregoing particular description illustrates the principles of the invention. These principles can be variously embodied within the scope of the invention and the appended claims.

I claim:

1. Equipment for handling acid consisting of a casing fabricated of wrought corrosion-resisting steel, welded at the joints, said material having been annealed by heat treatment after the parts have been welded and cooled, any metal added in welding being of substantially the same composition as the metal at the joint, and a lining of cast metal of approximately the same composition as that of the fabricated casing.

2. A pump for corrosive acid comprising a casing fabricated of wrought corrosion-resisting steel welded at the joints and annealed by reheating to the annealing temperature of the metal after the parts have been welded and cooled.

3. A pump for corrosive acid comprising a casing fabricated of wrought corrosion-resisting steel welded at the joints and annealed by reheating to the annealing temperature of the metal after the parts have been welded and cooled, any metal added in welding being of substantially the same composition as the metal at the joint and an acid-resisting lining within said casing.

4. A pump for corrosive acid comprising a casing fabricated of wrought corrosion-resisting steel welded at the joints and annealed by reheating the whole pump to the annealing temperature of the metal after the parts have been welded and cooled, any metal added in welding being of substantially the same composition as the metal at the joint a lining cast of a metal inactive electrolytically with the metal of the casing.

5. A pump for corrosive acid comprising a casing fabricated of wrought corrosion-resisting steel welded at the joints and annealed by reheating to the annealing temperature of the metal after the parts have been welded and cooled, any metal added in welding being of substantially the same composition as the metal at the joint, a lining within the fabricated casing formed of cast metal of substantially the same composition as the fabricated casing, and a corrosion-resisting rotor within said casing.

6. A pump for acid comprising a fabricated casing constructed principally of chromium steel plates of a composition containing approximately 18% chromium, 8% nickel with the remainder principally iron and having welded joints which have been cooled and heat-treated to provide corrosion resistance.

7. A pump for acid comprising a fabricated casing constructed principally of chromium steel plates of a composition containing approximately 18% chromium, 8% nickel with the remainder principally iron and having welded joints which have been cooled and heat-treated to produce austenitic structure, any material added in welding being of substantially the same composition as that of the plates, a rotor within and a lining for said casing cast of steel of substantially the same composition.

8. A pump for acid comprising a fabricated casing constructed of forged chromium steel plates of a composition containing approximately

20% chromium, 20% nickel with the remainder principally iron, and having welded joints which have been annealed to produce austenitic structure, any metal added in welding being of substantially the same composition as the metal at the joints.

9. A pump for acid comprising a fabricated casing constructed principally of forged chromium steel plates of a composition containing 18 to 30% chromium with the remainder principally iron and having welded joints which have been cooled and thereafter annealed to provide acid resistance at the joints.

10. The method of producing an acid proof pump which comprises fabricating the pump casing from forged steel of acid proof composition, including rolled steel plates, welding the joints and adding during the welding metal only of substantially the same composition as that of the forged steel, and heat treating the whole casing to produce a uniform acid resisting structure of the steel at the joints and throughout the casing.

11. The method of producing an acid proof pump which comprises fabricating the pump casing from forged steel of acid proof composition, including rolled steel plates, welding the joints and adding during the welding metal only of substantially the same composition as that of the forged steel, heat treating the whole casing to produce a uniform acid resisting structure of the steel at the joints and throughout the casing, and mounting within the casing a lining of cast steel of the same composition as that of the forged steel and similarly heat treated to produce austenitic structure whereby electrolytic action between the lining and casing is avoided.

12. The method of producing an acid proof pump which comprises fabricating the pump casing from forged steel of acid proof composition, including rolled steel plates, welding the joints and adding during the welding metal only of substantially the same composition as that of the forged steel, and heat treating the whole casing to produce a uniform acid resisting structure of the steel at the joints and throughout the casing and mounting within the casing a rotor of steel of the same composition as that of the casing whereby electrolytic action is avoided.

13. The method of producing an acid proof pump which comprises fabricating the pump casing from forged steel of a composition containing approximately 18% chromium and 8% nickel with the remainder principally iron, including rolled steel plates, welding the joints and adding during the welding metal only of substantially the same composition as that of the forged steel, and heat treating the whole casing to produce a uniform austenitic structure of the steel at the joints and throughout the casing.

14. An acid proof pump comprising a rotor casing constructed of acid proof forged steel parts welded together, said casing having in one side a bearing for the rotor shaft, an auxiliary casing surrounding said bearing and also formed of acid proof forged steel welded together, the whole pump being heat treated after welding at a temperature to anneal the metal and produce an acid proof condition at the welded joints, substantially as described.

15. A pump for acid comprising a fabricated casing constructed principally of chromium steel plates of a composition containing approximately 18% chromium, 8% nickel with the remainder principally iron and having welded joints, the whole pump being in annealed condition produced by cooling after welding and then heat-treating the whole pump as a unit to produce austenitic structure, any material added in welding being of substantially the same composition as that of the plates, a rotor within and a lining for said casing cast of steel of substantially the same composition to prevent electrolytic action.

GUNARD O. CARLSON.