Jan. 31, 1950 K. T. BUTTERY 2,495,807

DOUBLE WALLED BOX OR CARTON

Filed Sept. 9, 1946

2 Sheets-Sheet 1

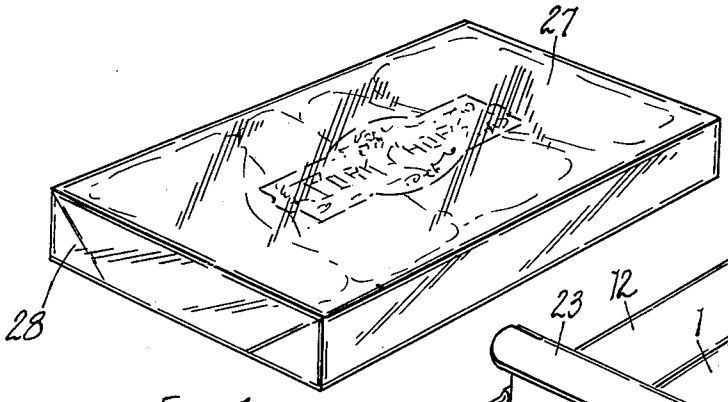

FIG. 1

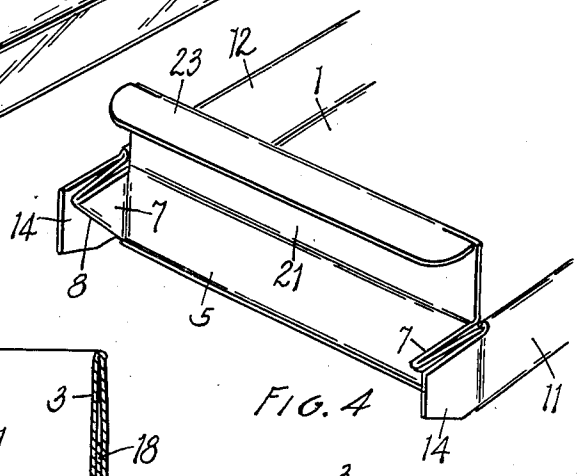

FIG. 4

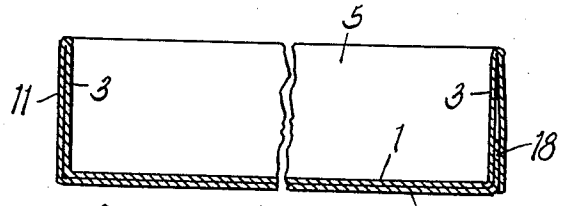

FIG. 2

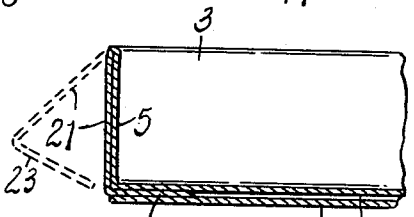

FIG. 3

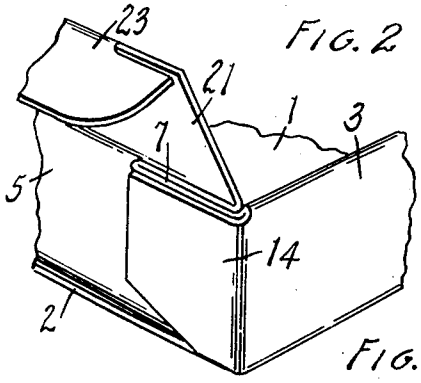

FIG. 6

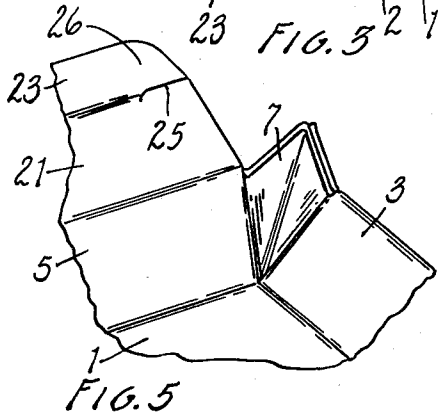

FIG. 5

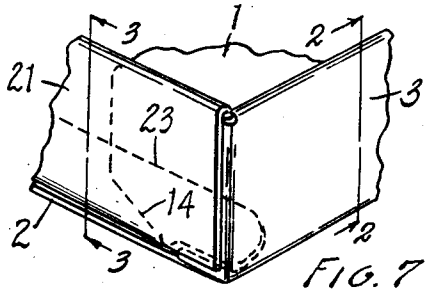

FIG. 7

INVENTOR.
Kenneth T. Buttery
BY
Otis A. Earl
Attorney.

Jan. 31, 1950 K. T. BUTTERY 2,495,807

DOUBLE WALLED BOX OR CARTON

Filed Sept. 9, 1946 2 Sheets-Sheet 2

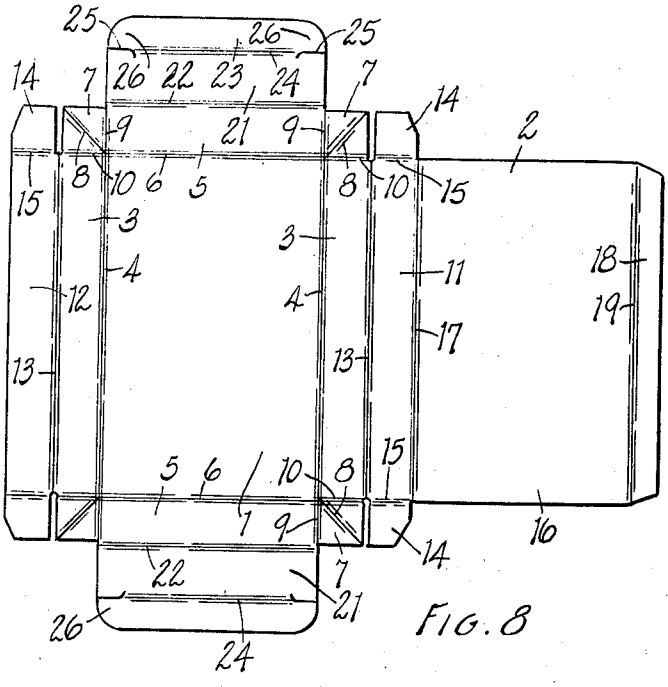

FIG. 8

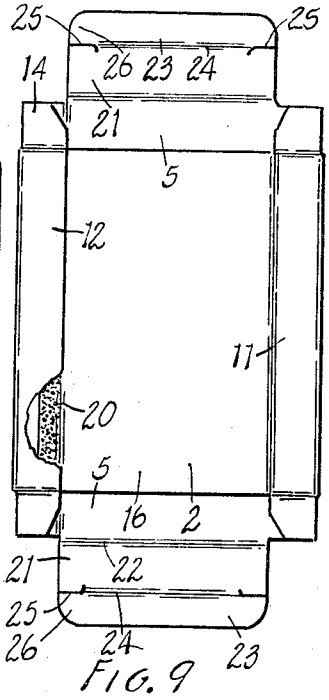

FIG. 9

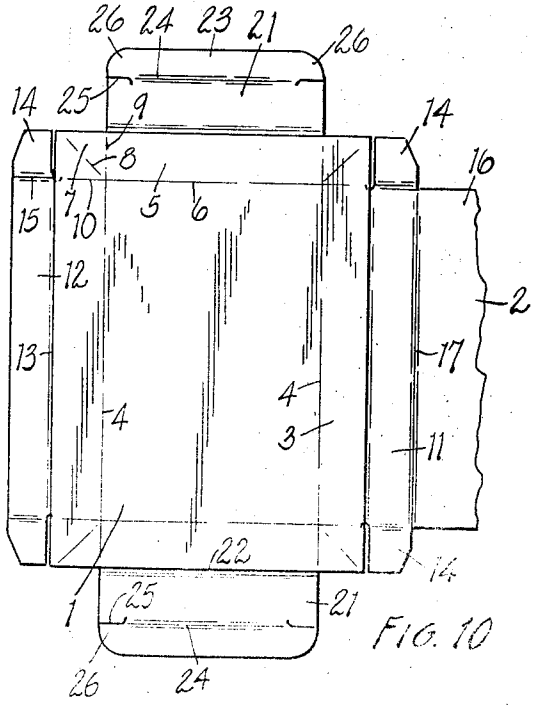

FIG. 10

INVENTOR.
Kenneth T. Buttery
BY
Otis A. Earl
Attorney

Patented Jan. 31, 1950

2,495,807

UNITED STATES PATENT OFFICE

2,495,807

DOUBLE WALLED BOX OR CARTON

Kenneth T. Buttery, Kalamazoo, Mich., assignor to Sutherland Paper Company, Kalamazoo, Mich., a corporation of Michigan

Application September 9, 1946, Serial No. 695,605

6 Claims. (Cl. 229—34)

1

This invention relates to double walled boxes or cartons.

The main objects of this invention are:

First, to provide a double walled carton or box formed of an integral blank which is quickly and easily set up or erected.

Second, to provide a double walled carton or box which may be formed of stock having a waterproof or other finished surface on only one side thereof, this surface being on the inside and also on the outside of the carton or box when it is erected.

Third, to provide a structure having these advantages which may be formed or relatively light stock and at the same time is strong and rigid when erected.

Fourth, to provide a double walled box or container for food products which is liquid tight and well adapted for products such as sliced meat and the like.

Fifth, to provide a double walled box or carton in which there are no raw or cut edges presented interiorly of the box.

Sixth, to provide a box or carton having these advantages which may be very economically produced and may be stored and shipped in the knockdown or in the flat knockdown form.

Objects relating to details and economies of the invention will appear from the description to follow. The invention is defined and pointed out in the claims.

A preferred embodiment of the invention is illustrated in the accompanying drawings, in which:

Fig. 1 is a perspective view of a carton or box embodying the invention with a transparent wrapper such as cellophane, the contents of the box being indicated by dotted lines.

Fig. 2 is a transverse section on line 2—2 of Fig. 7.

Fig. 3 is a longitudinal section on line 3—3 of Fig. 7, the outer end wall and its tucking flap being illustrated by dotted lines as the tucking flap is about to be inserted between the inner and outer bottom panels.

Fig. 4 is a fragmentary perspective view illustrating the parts in partially erected position and showing the relationship of the corner members and corner flaps to the parts to which they are connected.

Fig. 5 is a fragmentary inner perspective view of one of the corners of the box in partially erected position.

Fig. 6 is an enlarged outside fragmentary perspective view illustrating another step in the erecting.

2

Fig. 7 is a fragmentary outside perspective view of the completely erected structure.

Fig. 8 is a plan view of the blank.

Fig. 9 is a plan view of a glued collapsed box or carton with a part broken away to illustrate structural details.

Fig. 10 is a fragmentary inverted view of the blank shown in Fig. 8.

The embodiment of my invention is formed of an integral blank of suitable container or carton stock desirably having a waterproofed or resistant surface on one side or of a suitably finished surface. It is common in boxboard or container stock to provide the stock with one face or surface of a higher grade of material than the other. In structures embodying my invention this finished surface is presented both on the inside and outside of the carton or box. My carton or box is double walled throughout and is rigid even when formed of relatively light stock.

In the merchandising of certain products—for example meat which is quite heavy in proportion to bulk, the product is prepared in packages of suitable weight as illustrated in Fig. 1 and in self-serves stores or shops the customer removes the selected package from the refrigerated showcase, frequently picking up several packages before making a selection. The packages are picked up with one hand and a strong rigid package is therefore important to prevent distortion. Also it is important to retain the juices that may possibly exude from the product. The structure of my invention meets these various conditions or requirements.

The embodiment of my invention illustrated is formed of an integral blank comprising an inner bottom panel 1 and an outer bottom panel 2. Inner side walls 3 are hingedly connected to the side edges of the inner bottom panel 1 by the hinging scores 4. The inner end walls 5 are hingedly connected to the ends of the inner bottom panel by the hinging scores 6. The ends of the inner side and end walls are connected by the foldable corner members 7 having diagonal hinging scores 8 and being hingedly connected to the inner end walls by the hinging scores 9 and to the inner side walls by the hinging scores 10. These foldable corner members provide closed corners for the inner portion of the carton. They are foldable on the outer sides of the inner end walls as clearly shown in Fig. 6.

The outer side walls 11 and 12 are hingedly connected to the upper edges of the inner side walls

3 by the hinging scores 13. These outer side walls are provided with end flaps 14 hingedly connected thereto by the score 15 and are adapted to fold on the outer sides of the folded corner members—see Fig 6.

The outer bottom member 16 is hingedly connected by the scores 17 to the bottom edge of the outer side wall 17. The outer bottom panel 2 is provided with a glue flap 18 hingedly connected thereto at 19, this glue flap being lapped upon the inner side of the outer side wall 12 and adhesively secured thereto, the adhesive being indicated at 20, Fig. 9.

Outer end walls 21 are hingedly connected by the scores 22 to the upper edges of the inner end walls to be folded down upon the outer side thereof and over the folded corner members and flaps.

Tucking flaps 23 are hingedly connected to the lower edges of the outer end walls 21 by the hinge scores 24. Slits 25 are provided at the ends of the hinging scores forming locking tabs 26 on the ends of the tucking flaps. The scores 13, 17 and 19 are desirably substantially wider than the scores 4 and 6 inasmuch as the outer wall parts must fold around the inner wall parts.

The blanks are suitably dyed and scored and may be passed through a straight line gluing machine which applies adhesive to the glue flap 18 and folds it upon the outer side wall 12 so that the glue flap is on the inner side of the side wall. The folded and glued structure flies flat as is shown in Fig. 9.

To erect the carton, the double side walls are swung upwardly. The end walls are then swung upwardly and the corner members and flaps folded inwardly upon the outer side of the end walls. The outer end walls are then swung downwardly over the folded corner members and corner flaps and their tucking flaps 21 inserted beneath the corner members and corner flaps and between the inner and outer bottom panels. The slits 25 receive the lower edges of the corner flaps 14 and the locking tabs 26 then engage the inner side of the corner flaps. The parts are effectively locked or retained in erected position.

I thus provide a double walled carton or box which is very quickly and easily erected, has completely closed corners and a finished surface which may be coated with paraffin, if desired, presented both inside and outside of the carton. The merchandise indicated at 27 may be tastefully arranged in the carton and the carton wrapped with a transparent wrapper as indicated at 28, the wrapper being desirably sealed which provides a completely closed or sealed package and at the same time one in which the contents are readily inspected. The carton or box is strong and rigid even when formed of relatively light material and may be handled without injury thereto.

It will be noted that there are no cut edges or raw edges, as they are commonly designated, exposed to the interior of the box. This is a highly important factor of the packaging of many products as cut or raw edges absorb greases or juices and result in discoloration.

I have illustrated and described my invention in a highly desirable embodiment thereof. I have not attempted to illustrate or describe certain modifications or adaptations as it is believed that this disclosure will enable those skilled in the art to embody or adapt the invention as may be desired.

Having thus described my invention, what I claim as new and desire to secure by Letters Patent is:

1. A collapsible double walled box or carton formed of an integral blank cut and scored to provide an inner bottom panel and inner side and end walls hingedly connected to the inner bottom panel, and diagonally foldable corner members hingedly connected to the adjacent ends of the inner side and end walls and foldable on the outer sides of the inner end walls, outer side walls hingedly connected to the upper edges of the inner side walls and having corner flaps at their ends foldable upon the folded corner members, an outer bottom panel hingedly connected at one side edge to the bottom edge of one of said outer side walls and having a sealing flap hingedly connected to its other side edge and lapped upon and adhesively secured to the inner side of the other outer side wall, and outer end walls hingedly connected to the upper edges of the inner end walls and foldable downwardly on the outer sides thereof over the said corner members and corner flaps when they are in erected position against the outer sides of the inner end walls, said outer end walls having tucking flaps hingedly connected to their bottom edges disposed under the folded corner members and flaps and between said outer and inner bottom panels and having slits at the ends of the hinges thereof having interlocking engagement with the bottom edges of said corner flaps, said outer end walls and inner end walls constituting means for housing and retaining said foldable corner members in a collapsed folded position therebetween when the tucking flaps of the outer end walls are disposed between said outer and inner bottom panels.

2. A collapsible double walled box or carton formed of an integral blank cut and scored to provide an inner bottom panel and inner side and end walls hingedly connected to the inner bottom panel, and diagonally foldable corner members hingedly connected to the adjacent ends of the inner side and end walls and foldable on the outer sides of the inner end walls, outer side walls hingedly connected to the upper edges of the inner side walls, an outer bottom panel hingedly connected at one side edge to the bottom edge of one of said outer side walls and having a sealing flap hingedly connected to its other side edge and lapped upon and adhesively secured to the inner side of the other outer side wall, and outer end walls hingedly connected to the upper edges of the inner end walls and foldable downwardly on the outer sides thereof over the said diagonally foldable corner members when they are in erected position against the outer sides of the inner end walls, said outer end walls having tucking flaps hingedly connected to their bottom edges disposed between said outer and inner bottom panels, said outer end walls and inner end walls constituting means for housing and retaining said foldable corner members in a collapsed folded position therebetween when the tucking flaps of the outer end walls are disposed between said outer and inner bottom panels.

3. A collapsible double walled box or carton comprising an inner bottom panel and inner side and end walls hingedly connected to the inner bottom panel, foldable corner members hingedly connected to the adjacent ends of the inner side and end walls and foldable on the outer sides of the inner end walls, outer side walls hingedly connected to the upper edges of the inner side walls and having corner flaps at their ends foldable upon the folded corner members, an outer

bottom panel hingedly connected to the bottom edge of one of said outer side walls and having a sealing flap connected to the inner side of the other outer side wall, and outer end walls hingedly connected to the upper edges of the inner end walls and foldable downwardly on the outer sides thereof over the said corner members and corner flaps when they are in erected position against the outer sides of the inner end walls, said outer end walls having tucking flaps at their bottom edges adapted to be disposed under the folded corner members and flaps and between said outer and inner bottom panels and having interlocking engagement with the said corner flaps, said outer end walls and inner end walls constituting means for housing and retaining said foldable corner members in a collapsed folded position therebetween when the tucking flaps of the outer end walls are disposed between said outer and inner bottom panels.

4. A collapsible double walled box or carton comprising an inner bottom panel and inner side and end walls hingedly connected to the inner bottom panel, foldable corner members hingedly connected to the adjacent ends of the inner side and end walls and foldable on the outer sides of the inner end walls, outer side walls hingedly connected to the upper edges of the inner side walls, an outer bottom panel hingedly connected to the bottom edge of one of said outer side walls and having a sealing flap connected to the inner side of the other outer side wall, and outer end walls hingedly connected to the upper edges of the inner end walls and foldable downwardly on the outer sides thereof over the said diagonally foldable corner members and corner flaps when they are in erected position against the outer sides of the inner end walls, said outer end walls having tucking flaps at their bottom edges adapted to be disposed between said outer and inner bottom panels, said outer end walls and inner end walls constituting means for housing and retaining said foldable corner members in a collapsed folded position therebetween when the tucking flaps of the outer end walls are disposed between said outer and inner bottom panels.

5. A collapsible double walled box or carton comprising an inner bottom panel and inner side and end walls flexibly joined at their bottom edges to the front bottom panel, foldable corner members flexibly joined to the adjacent ends of the inner side and end walls and foldable on the outer sides of the inner end walls, outer side walls flexibly connected to the upper edges of the inner side walls and having corner flaps at their ends

foldable upon the folded corner members, an outer bottom panel flexibly joined to the bottom edges of said outer side walls, and outer end walls flexibly joined to the upper edges of the inner end walls and foldable downwardly on the outer sides thereof over the said corner members and corner flaps when they are in erected position against the outer sides of the inner end walls, said outer end walls having flaps at their bottom edges adapted to be inserted between said outer and inner bottom panels and having interlocking engagement with the said corner flaps, said outer end walls and inner end walls constituting means for housing and retaining said foldable corner members in a collapsed folded position therebetween when the tucking flaps of the outer end walls are disposed between said outer and inner bottom panels.

6. A collapsible double walled box or carton comprising an inner bottom panel and inner side and end walls flexibly joined at their bottom edges to the inner bottom panel, foldable corner members flexibly joined to the adjacent ends of the inner side and end walls and foldable on the outer sides of the inner end walls, outer side walls flexibly connected to the upper edges of the inner side walls, an outer bottom panel flexibly joined to the bottom edges of said outer side walls, and outer end walls flexibly joined to the upper edges of the inner end walls and foldable downwardly on the outer sides thereof over the said diagonally foldable corner members and corner flaps when they are in erected position against the outer sides of the inner end walls, said outer end walls having flaps at their bottom edges adapted to be inserted between said outer and inner bottom panels, said outer end walls and inner end walls constituting means for housing and retaining said foldable corner members in a collapsed folded position therebetween when the tucking flaps of the outer end walls are disposed between said outer and inner bottom panels.

KENNETH T. BUTTERY.

REFERENCES CITED

The following references are of record in the file of this patent:

UNITED STATES PATENTS

Number	Name	Date
622,496	Knobeloch	Apr. 4, 1899
1,957,264	Gross	May 1, 1934
2,334,425	Lowey	Nov. 16, 1943
2,334,985	Berry	Nov. 23, 1943