Dec. 10, 1935. F. L. MIDDELRAAD 2,024,051

PICTURE TRANSMISSION SYSTEM

Original Filed June 20, 1929 7 Sheets-Sheet 1

Fig. 1a.

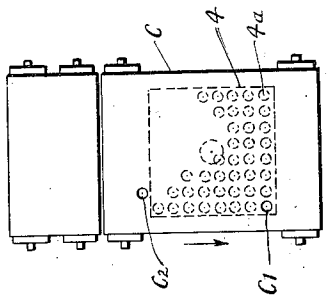

Fig. 2a.

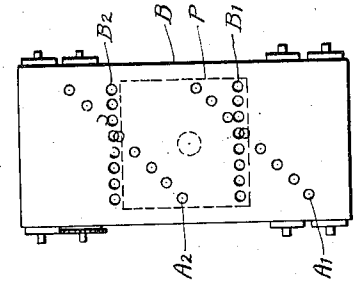

Fig. 1.

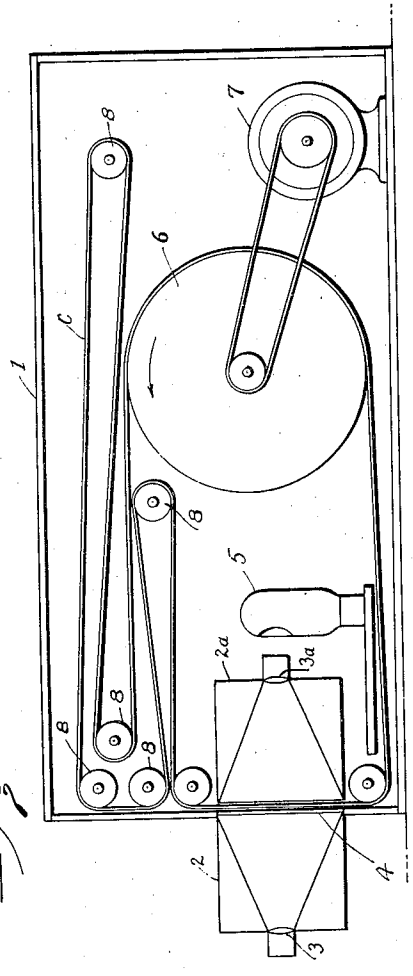

Fig. 2.

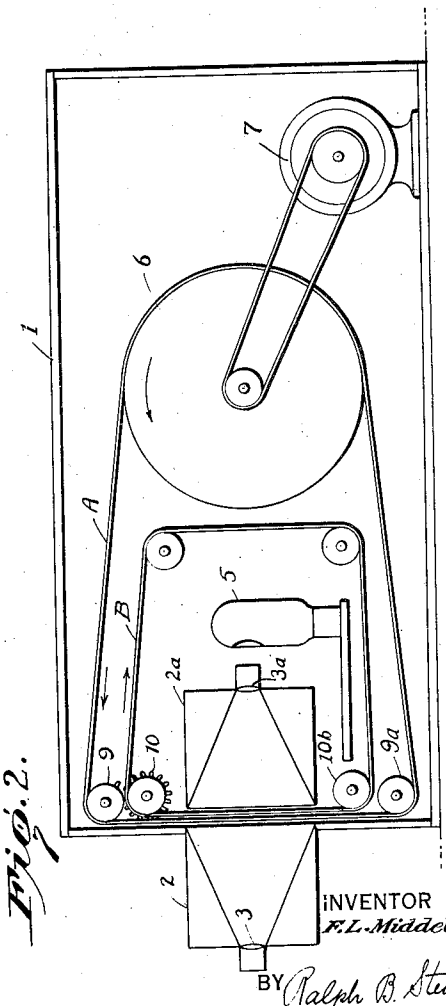

INVENTOR
F. L. Middelraad,
BY Ralph B. Stewart
ATTORNEY

Dec. 10, 1935. F. L. MIDDELRAAD 2,024,051

PICTURE TRANSMISSION SYSTEM

Original Filed June 20, 1929 7 Sheets-Sheet 2

Fig. 3

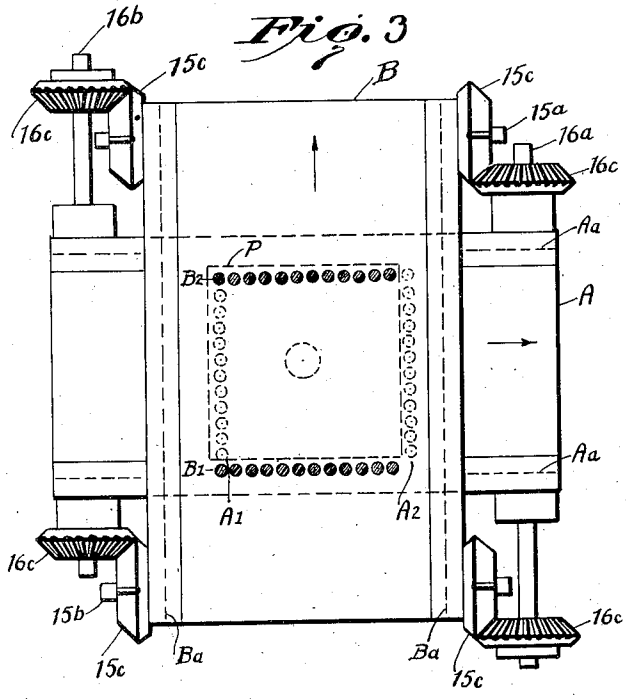

Fig. 3a

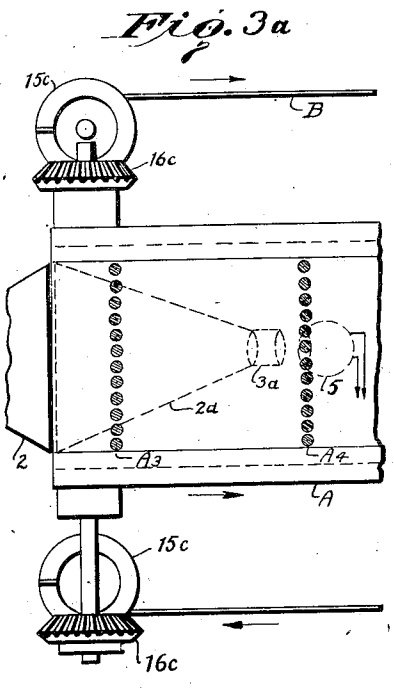

Fig. 3b

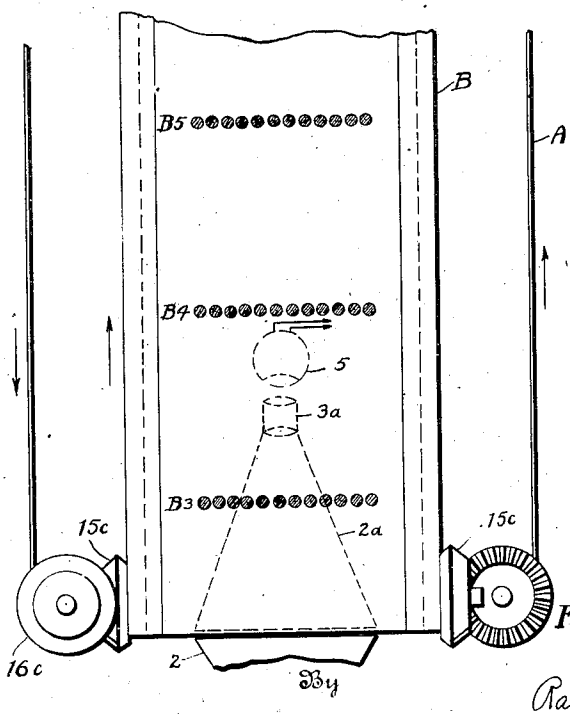

Inventor

F.L. Middelraad

Ralph B. Stewart

Attorney

Dec. 10, 1935. F. L. MIDDELRAAD 2,024,051

PICTURE TRANSMISSION SYSTEM

Original Filed June 20, 1929 7 Sheets-Sheet 3

Fig. 4.

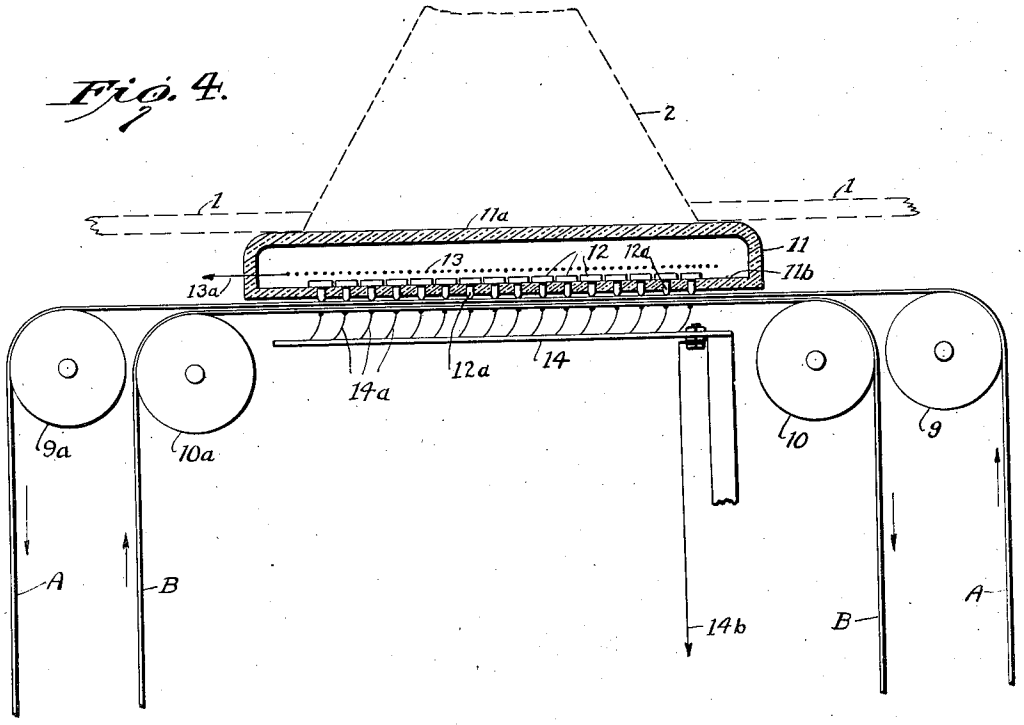

Fig. 5.

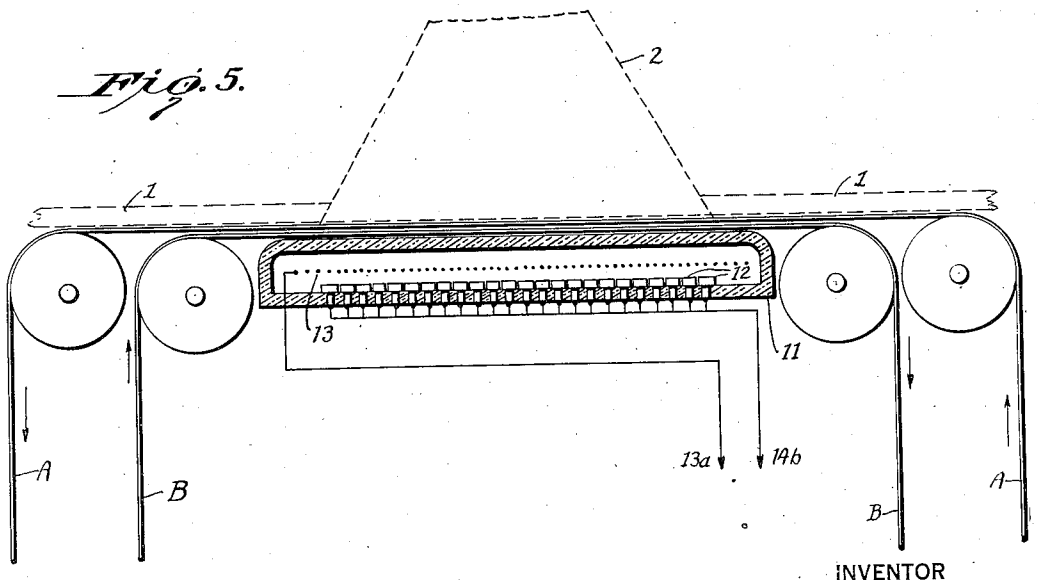

INVENTOR

F. L. Middelraad,

BY Ralph B. Stewart

ATTORNEY

Dec. 10, 1935. F. L. MIDDELRAAD 2,024,051

PICTURE TRANSMISSION SYSTEM

Original Filed June 20, 1929 7 Sheets-Sheet 4

Fig. 6.

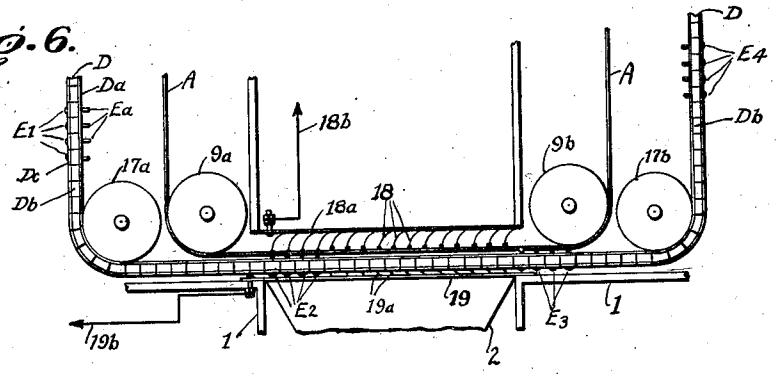

Fig. 7.

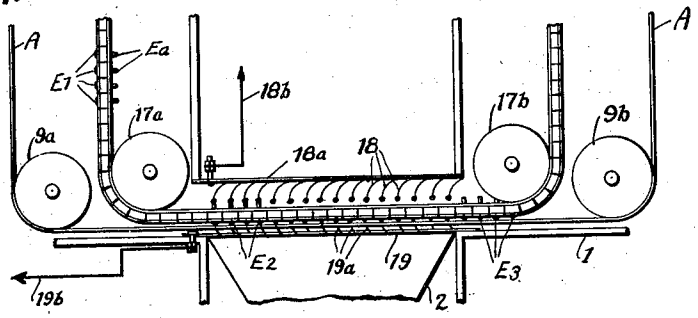

Fig. 8.

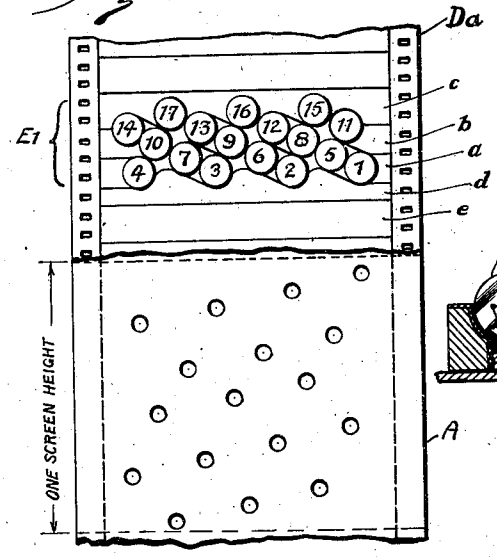

Fig. 8a



Fig. 8b

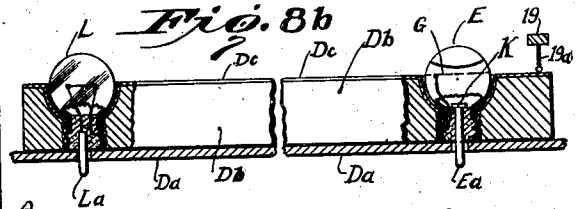

Inventor

F. L. Middelraad,

By Ralph B. Stewart

Attorney

Dec. 10, 1935. F. L. MIDDELRAAD 2,024,051

PICTURE TRANSMISSION SYSTEM

Original Filed June 20, 1929 7 Sheets-Sheet 5

Fig. 10a

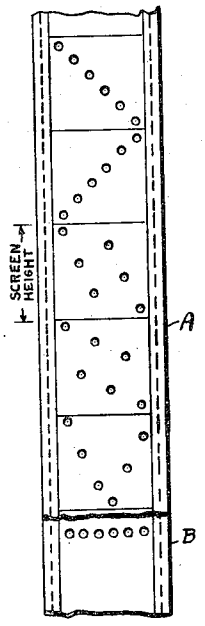

Fig. 10b

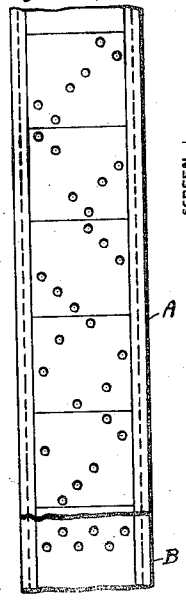

Fig. 10c

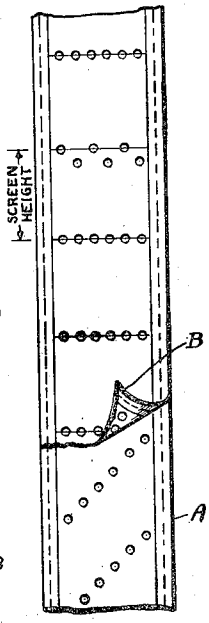

Fig. 10d

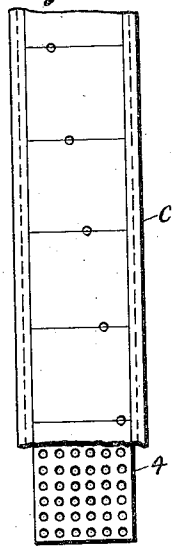

Fig. 10e

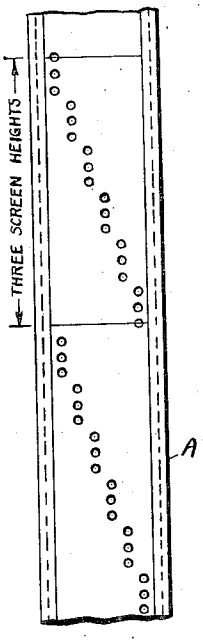

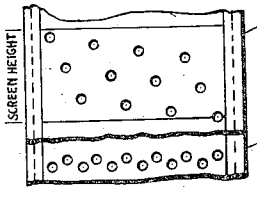

Fig. 10f

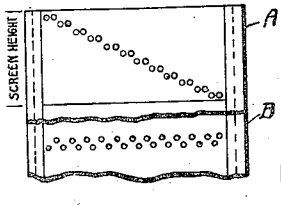

Fig. 10g

Fig. 9.

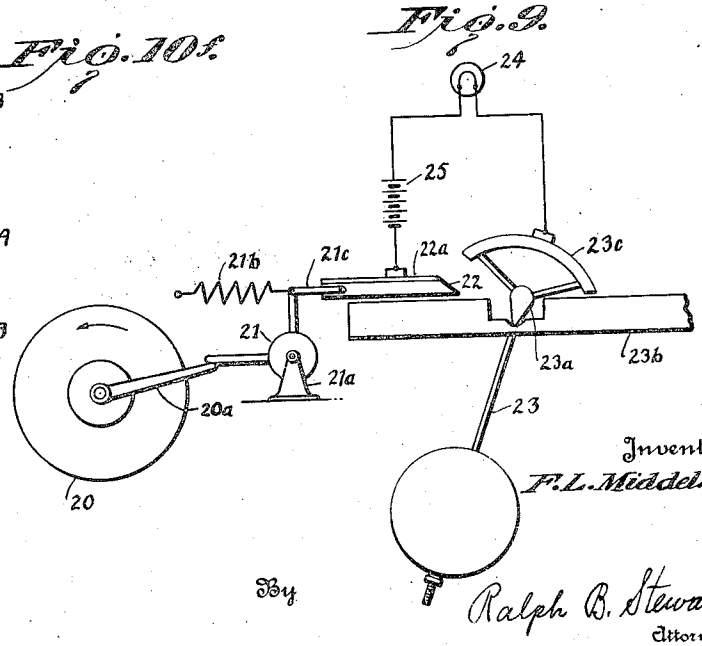

Inventor
F. L. Middelraad,

By Ralph B. Stewart
Attorney

Dec. 10, 1935. F. L. MIDDELRAAD 2,024,051

PICTURE TRANSMISSION SYSTEM

Original Filed June 20, 1929 7 Sheets-Sheet 6

Fig. 11.

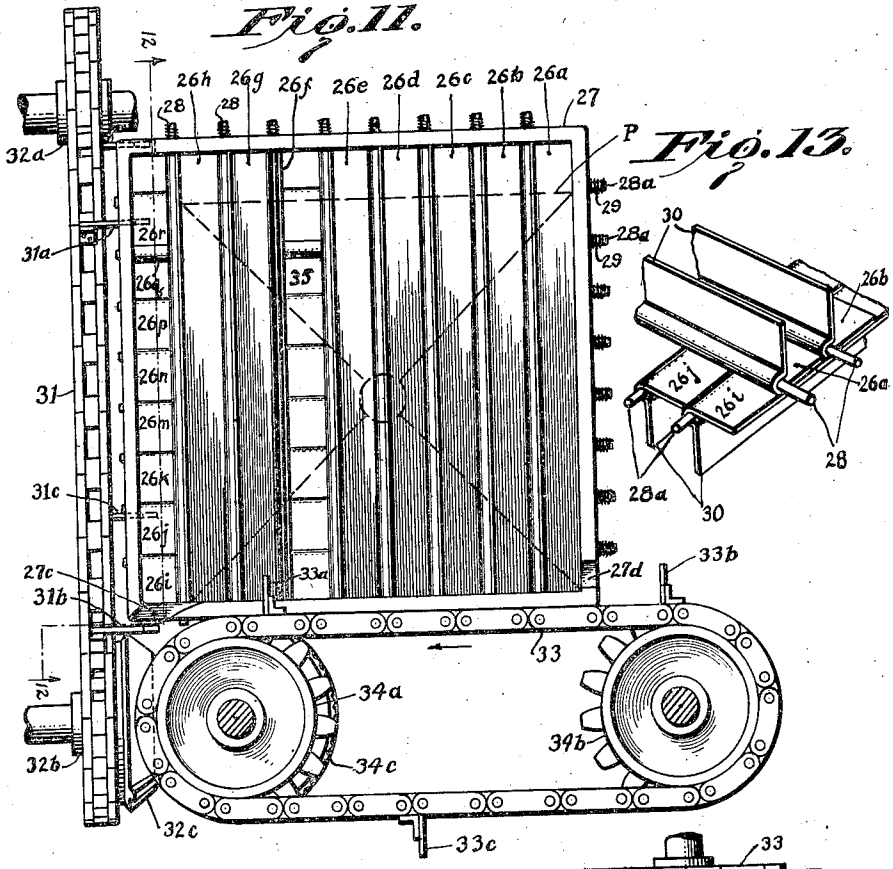

Fig. 13.

Fig. 12.

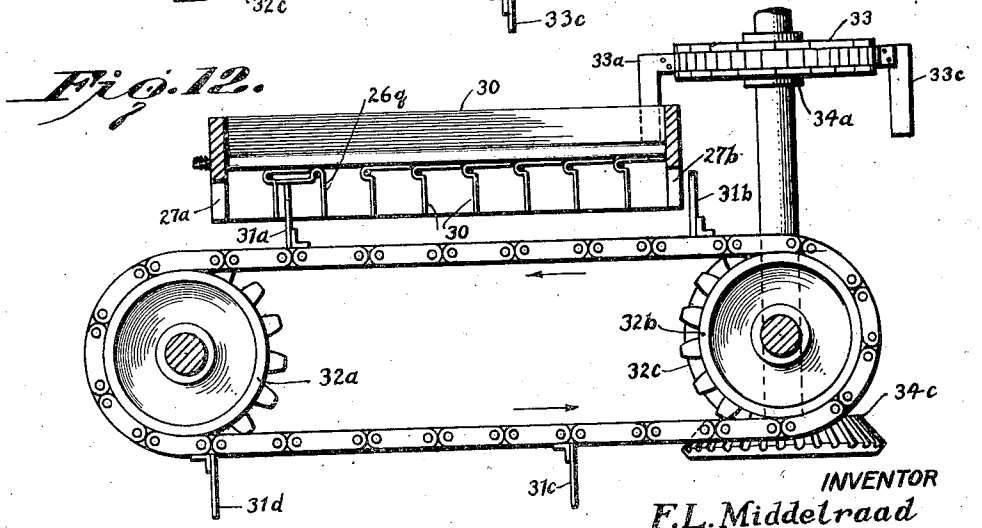

INVENTOR

F. L. Middelraad

By Ralph B. Stewart

Attorney

Dec. 10, 1935. F. L. MIDDELRAAD 2,024,051

PICTURE TRANSMISSION SYSTEM

Original Filed June 20, 1929 7 Sheets-Sheet 7

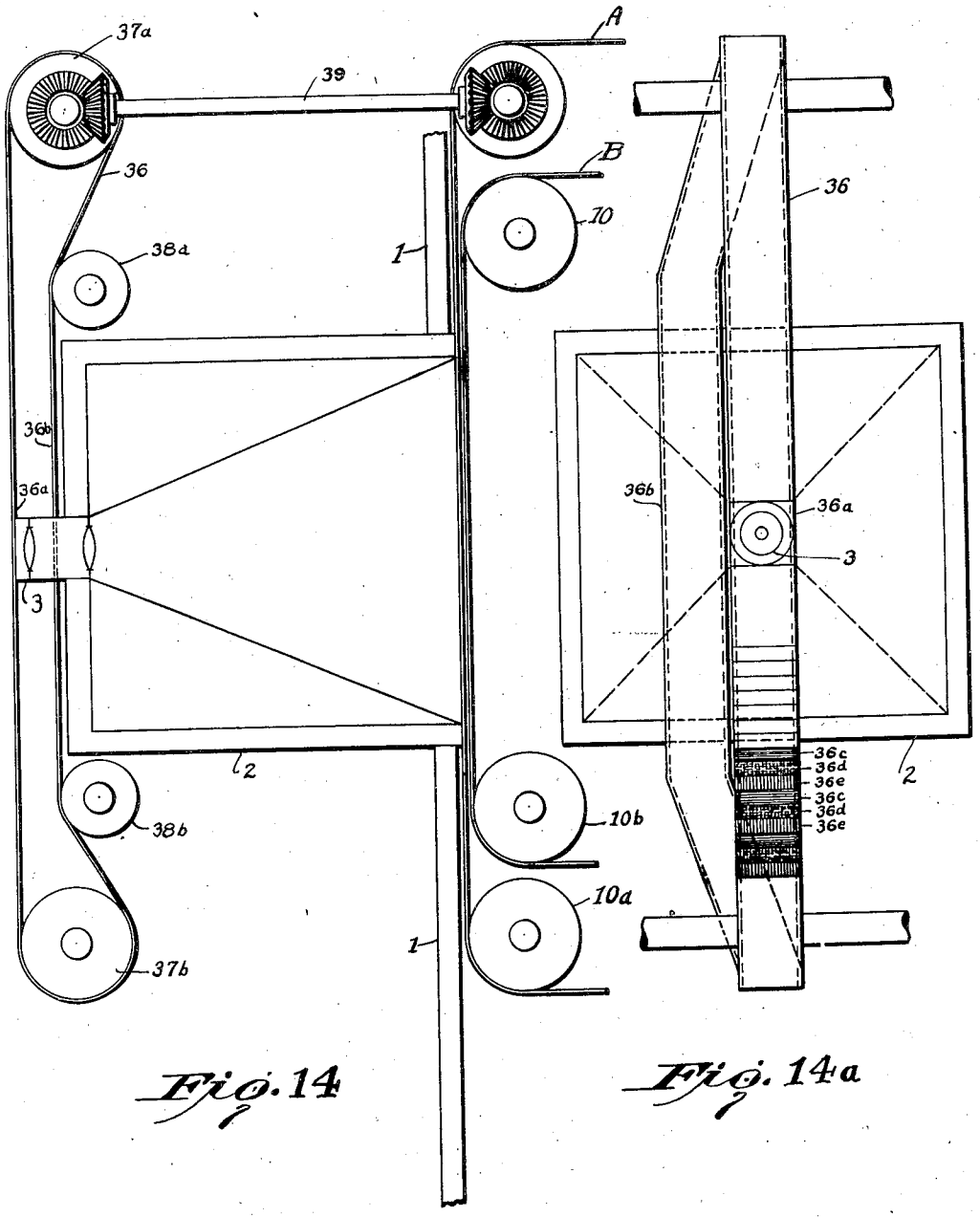

Fig. 14

Fig. 14a

INVENTOR

F. L. Middelraad,

BY Ralph B. Stewart

ATTORNEY

Patented Dec. 10, 1935 2,024,051

UNITED STATES PATENT OFFICE

2,024,051

PICTURE TRANSMISSION SYSTEM

Franciscus Leonardus Middelraad, Toronto, Ontario, Canada

Application June 20, 1929, Serial No. 372,490
Renewed April 19, 1934

10 Claims. (Cl. 178—6)

My invention relates to a system for the transmission and reception of pictures or scenes between distant points.

In known systems for the transmission of pictures scanning devices are employed which traverse the picture in a series of parallel strips, and the photo-electric current produced varies in accordance with the changes in light intensity of successive portions of the strips. An object of my invention is to devise a scanning arrangement in which the picture is analyzed into a plurality of separate elementary areas or dots which remain stationary and which when exposed in succession to the light-cell produce a photo-electric current of a periodic character.

A further object of my invention is to devise a novel photo-electric cell for conserving and utilizing the light of a picture image to the greatest efficiency.

Still another object of my invention is to devise a scanning arrangement employing a multiple photo-electric cell having a sensitive area sufficiently large to receive an image of the picture to be transmitted, and to provide commutator means for connecting the elementary cells of the multiple cell to the transmitting apparatus in succession.

A further object is to devise a scanning arrangement in which an image of the picture to be transmitted is projected upon a number of photo-electric cells having an effective area less than the image area, and to provide means for shifting the photo-electric cells whereby the entire image area may be scanned by a limited number of photo-electric cells.

My invention also has for an object the provision of a scanning device making it possible to employ a multiple photo-electric cell in which the individual cells have physical dimensions larger than the elementary areas of the image projected upon the multiple cell.

My invention also relates to a system for indicating the condition of synchronism between the transmitting and receiving stations.

A further object of my invention is to devise a scanning arrangement employing two crossed groups of separately operable shutter elements, and in which the number of elementary areas which may be exposed successively is equal to the product of the number of shutters in one group times the number in the other group.

A further object of my invention is to devise a system for the transmission and reception of pictures in colors.

My invention is illustrated in the accompanying drawings in which:

Figure 1 is a side view of one form of my invention with one side of the enclosing housing removed;

Figure 1*a* is a front view of the apparatus shown in Figure 1 with the housing removed;

Figure 2 is a side view of another form of my invention with one side of the enclosing housing removed;

Figure 2*a* is an end view of the apparatus shown in Figure 2 with the enclosing housing removed;

Figure 3 is a front view of a third form of my invention;

Figure 3*a* is a side elevation of Figure 3;

Figure 3*b* is a plan view of Figure 3;

Figure 4 is an elevation, partly in cross section, of a fourth form of my invention;

Figure 5 is an elevation, partly in cross section, of a fifth form of my invention;

Figure 6 is a side elevation of another form of my invention;

Figure 7 is a side elevation of a modification of the arrangement shown in Figure 6;

Figure 8 is an enlarged view showing the details of construction of the bands employed in Figures 6 and 7;

Figure 8*a* is a detailed view of a typical slat element employed in Figure 8;

Figure 8*b* illustrates the manner in which the photo-electric cell and the incandescent lamps are mounted in the slats of the movable belt shown in Figures 6, 7 and 8;

Figure 9 is a schematic diagram of the apparatus employed for indicating synchronism between the transmitting and receiving stations;

Figures 10*a*, 10*b*, 10*c*, 10*f* and 10*g* illustrate typical arrangements of perforations in bands A and B for use in connection with the double-band arrangements shown in Figures 2, 4 and 5;

Figure 10*d* illustrates the arrangement of perforations in band C and screen 4 as employed in the arrangement shown in Figure 1;

Figure 10*e* illustrates the arrangement of perforations in band A employed in Figures 14 and 14*a*;

Figure 11 is a front view of another form of my invention in which the scanning operation is accomplished by the simultaneous opening of shutters or doors having a width equal to that of an elementary picture area;

Figure 12 is a side view of Figure 11 with the scanning door assembly shown in cross section along the line 12—12;

Figure 13 is a perspective view showing the two sets of doors arranged at right angles to each other;

Figure 14 is a side view of another form of my invention for the transmission of pictures in colors; and

Figure 14*a* is a front view of the apparatus shown in Figure 14.

Referring to Figure 1, a light-proof housing 1 is provided at one end with a camera opening

over which is fitted camera hood 2 containing an objective lens 3 which is adapted to form an image of the object or scene to be transmitted upon a perforated screen 4 located in the camera opening. Stationary screen 4 is provided with vertical rows of closely spaced perforations 4a (see Fig. 1a), each perforation representing an elementary area of the picture to be transmitted. Within housing 1 and behind the camera opening is located a second camera hood 2a in which is mounted a condensing lens 3a, which is adapted to focus rays of light from the screen 4 onto the sensitive area of a photo-electric cell 5. A flexible, opaque, endless band C is arranged to pass between screen 4 and lens 3a, and is driven by a pulley 6 which in turn is driven by a motor 7. Band C is provided with a number of perforations C1, C2, etc. (see Fig. 1a), spaced along the length of the band a distance equal to the height of the picture screen, each successive perforation being displaced horizontally with respect to the last a distance slightly greater than the width of a perforation. For example, if the screen 4 and the picture area is provided with 8 rows of eight perforations each, then band C will be provided with eight perforations, each displaced from the next along the length of the band by a distance equal to the height of the screen and being displaced horizontally to coincide with one of the rows of perforations in screen 4. While for the purpose of illustration I have shown the elementary areas as being rather large with respect to the picture area, it will be understood that the size and the spacing of the elementary areas may be made as small as desired in order to obtain satisfactory detail in the reproduced picture. In order to accommodate the required length of band in the relatively small housing 1, the band may be passed back and forth over a number of idle pulleys 8. It will be apparent that pulley 6 may be provided with two rows of driving sprockets or teeth engaging suitable driving perforations on band C in the same manner as motion picture film drive.

Operation of the scanning arrangement shown in Figures 1 and 1a is as follows:

The picture or object to be transmitted is imaged upon screen 4 by objective lens 3. The band C is driven at a suitable constant speed past screen 4. Only one perforation of band C will be opposite screen 4 at any given instant. As explained above, each perforation in band C is arranged to travel over a row of perforations in screen 4. For example, perforation C1 passes over the first vertical row of perforations in screen 4, and as it passes out of the picture area, perforation C2 passes over the second vertical row of perforations in screen 4, and the same operation takes place with respect to the remaining perforations in band C until all the perforations in screen 4 have been covered. As a perforation in band C coincides with a perforation in screen 4, light is admitted to housing 1 with an intensity corresponding to the elementary area of the image of the picture at that particular point. This light is focused upon the sensitive area of photo-electric cell 5 by condensing lens 3a. It will be seen that by the use of stationary screen 4, the elementary areas of the picture remain stationary during the scanning operation, and as band C passes in front of the screen, light from each elementary area is permitted to influence the photo-electric cell 5 in succession. It will be understood that cell 5 is connected to suitable electric translating circuits and that periodic current variations will be produced in these circuits coresponding in intensity to the light variations of the successive elementary areas of the picture. The current variations are amplified and transmitted to the receiving apparatus by any of the methods well known to those skilled in the art. Due to the periodic character of the current, caused by the periodic coincidence of the perforations in the stationary screen and the perforations in the movable scanning band, under certain conditions it will be feasible to employ transformer-coupled amplifiers for amplifying the current. At the receiving station, the apparatus is the same as at the transmitting station, except that the cell 5 is replaced by an electric lamp energized by the received current. The transmitting and receiving devices must be driven in synchronism, which may be accomplished by any of the well known systems employed for this purpose.

It will be apparent that the screen 4 may be positioned behind band C instead of in front of it as shown in Fig. 1.

In the arrangement shown in Figures 2 and 2a, the screen 4 has been omitted and two perforated bands are employed instead of one. The band A is driven by pulley 6 and is provided with a series of perforations arranged in oblique lines spaced apart a distance equal to the screen height, as shown at A1 and A2 in Figure 2a. Band B is arranged to be driven in step-by-step movement by pulley 10 the shaft of which is provided with a multi-tooth gear engaging a mutilated (single-tooth) gear mounted on the shaft of pulley 9. Band B is provided with horizontal rows of perforations displaced apart a distance equal to the picture height, as indicated at B1 and B2 in Figure 2a.

Operation of the arrangements shown in Figs. 2 and 2a is as follows:

The outline of the picture area is indicated by the dotted square P in Figure 2a. Only one row of perforations in band B lies within the picture area at any given instant. As band A passes in front of the picture area, the perforations on this band coincide with the perforations on band B in succession from left to right. For example, the fifth perforation in row B1 is partially coinciding with the fifth perforation in the row A1 of band A. The sixth perforation will be the next to coincide. The gearing arrangement connecting pulleys 9 and 10 for the intermittent drive of band B is such that band B is moved vertically a distance equal to the distance between adjacent perforations in band B, or a distance slightly larger than the diameter of a perforation. It will thus be seen that by continued operation of the scanning device, the entire picture area will be effectively analyzed into stationary elementary picture areas, and these areas will be successively scanned.

It will be understood that instead of driving band B by intermittent movement, this band may be driven at a constant speed by providing a suitable reduction gear between pulley 9 and pulley 10, the gear ratio being such that band B is moved the proper vertical distance for corresponding movements of band A, however, I prefer the intermittent drive. It is also apparent that band B may be arranged to pass in front of band A without materially changing the operation of the system.

Another form of my invention is disclosed in Figs. 3, 3a and 3b. Elements corresponding to like elements in Figures 1 and 2 are indicated

by the same reference characters. In this arrangement, the opaque band B is trained over rolls on shafts 15a and 15b, and band A is trained over rolls mounted on shafts 16a and 16b at right angles to band B. The two sets of shafts are geared together by single-tooth gears 15c mounted on shafts 15a and 15b cooperating with multi-tooth gears 16c secured to shafts 16a and 16b. The shaft 15a (or 15b) is driven from a suitable source of power (not shown). Bands A and B may be provided with driving perforations along their edges as indicated at Aa and Ba, and the driving rolls may be provided with driving teeth or sprockets engaging these perforations.

Band B is provided with a number of rows of perforations B1, B2, B3, etc., arranged at right angles to the length of the band and spaced apart along the band a distance equal to the height of the picture area. Band A is likewise provided with a number of rows of perforations A1, A2, A3, etc., spaced apart along the length of the band a distance equal to the width of the picture area. The picture area, or the area of the image produced by camera 2, is indicated by the dotted square P in Figure 3. The perforations in the bands are preferably round and are of a size equal to an elementary area of the picture area P.

Operation of the arrangement shown in Figures 3, 3a and 3b is as follows:

With the bands in the position shown in Figure 3, the perforation at the left of row B2 in band B coincides with the perforation at the top of row A1 in band A, and light is admitted from that part of the image which lies immediately opposite these two perforations. As band B moves upward, the single-tooth gears 15c engage the multi-tooth gears 16c and cause band A to move to the right a distance slightly greater than the diameter of a perforation. The perforation second from the left in row B1 now coincides with the bottom perforation in row A1. Continued movement of band B upward causes the entire row A1 to be traversed by the second perforation from the left in row B1. When the row B1 reaches the top of the picture area, the band A is again moved to the right a distance slightly greater than the diameter of a perforation, and the row A1 is again traversed by the third perforation in the next row of perforations in band B. This operation continues until the entire picture area has been covered. The light admitted to the camera is condensed by lenses 3a and projected upon the photo-electric cell 5, where it produces corresponding current variations in suitable electric circuits, which current variations are transmitted in the well known manner to the receiving station.

It is apparent that the position of the single tooth on gears 15c is not correctly shown with respect to the relative positions of the rows of perforations on bands A and B, but the gears have been shown in the position illustrated for the sake of clearness of illustration. The correct position for the single tooth on gears 15c in Figure 3 is just at the point of engagement with a tooth on gears 16a.

In Figure 4 there is shown a special form of photo-electric cell for use in connection with the double band arrangement disclosed in Figure 2. The novel cell comprises a gas filled glass envelope 11 having parallel front and back sides 11a and 11b, and being sufficiently large in area to cover the camera opening in housing 1. The back side 11b of the container is covered with a plurality of photo-sensitive cathode elements 12 made of potassium or other photo-electric metal, or they may be made of non-sensitive metal and have a coating of light-sensitive material, such as the alkali metals. I prefer potassium or rubidium in a rarified atmosphere of neon gas. The cathodes are supported within the cell by contactor studs 12a sealed in and extending through the back side 11b. The cathode elements 12 are preferably either square or round in area, and are arranged in checker-board fashion to completely cover the area upon which the image of the picture is to be formed, each cathode element being of sufficiently small dimensions to constitute one elementary area of the picture. Within the cell 11 there is mounted a screen or grid anode 13 extending over the entire picture area and being provided with a terminal conductor 13a. Bands A and B are arranged to pass over the contact studs 12a at the rear of the cell, and these bands are provided with perforations as described above in connection with Figs. 2 and 2a. A conducting plate 14 is mounted parallel to the cell 11 on the opposite side of bands A and B, and a number of spring contact fingers 14a, corresponding in number and position to the photo-electric cathodes, are supported from this plate and the free ends of which press bands A and B against the contact studs 12a.

Operation of Fig. 4 is as follows: The picture or scene to be transmitted is imaged upon the area covered by the cathodes 12 by means of the camera 2. Each cathode element will be energized or excited in accordance with the intensity of the light falling upon it at any given instance. Terminal conductors 13a and 14b are connected to electric amplifying and transmitting circuit of usual design for the transmission of currents originating from the cell. Due to the particular arrangement of perforations on bands A and B, the spring contact fingers 14a are held out of contact with the cathode studs 12a except when a perforation on band A coincides with the perforation on band B. The perforations are so arranged that there is only one coinciding position in the picture area at any given instance, and therefore only one cathode element 12 is connected in the transmitting circuit at any given time. As explained above in connection with Figs. 2 and 2a continued operation of bands A and B will effect the connection of all the elementary photo-electric cells into the transmitting circuit in succession. The current supplied to the input of the transmitting circuit will be proportional to the light intensity of an elementary area of the picture corresponding to the position of the particular cell whose circuit is completed.

The arrangement shown in Fig. 5 is somewhat like that shown in Fig. 4 except that the cathode elements are all connected permanently to the terminal conductor 14b, and the cell is arranged behind bands A and B in such manner that only one point of light is permitted to pass to the cell at any given instant. In this arrangement all the elementary photo-electric cells are connected in parallel to the transmitting circuit but only one cell is energized at a time by light passing through coinciding perforations on bands A and B. Accordingly, the intensity of the current transmitted at any instant will be proportional to the light admitted through the coinciding perforations corresponding to a given elementary area of the picture to be transmitted. As explained above, by continued operation of bands A and B the entire picture area may be scanned.

It is apparent that since the elementary cells

in Fig. 5 are all connected in parallel, the multiple cathode may be replaced by a single, continuous cathode surface extending over the entire picture area.

The arrangements shown in Figs. 5 and 6 possess an advantage over the single-cell arrangements shown in Figs. 1, 2 and 3, in that, since the elementary cells are located in the image plane, all the light in each elementary area of the picture image is effective in operating the cell.

Both the arrangements shown in Figs. 5 and 6 may be used as receiving devices by replacing the multiple cell by a lamp board having lamps mounted in the places occupied by the elementary cells, and connecting the terminals *13a* and *14b* to the output of the receiving amplifier.

In Figures 6 and 7, I have shown other forms of my invention for securing greater efficiency of operation of the photo-electric cells at the transmitting station and the light sources or lamps at the receiving station.

In the arrangement shown in Fig. 6, the stationary photo-electric cell and condensing lens has been replaced by a flexible slat-belt D trained over rolls *17a* and *17b* and carrying groups of photo-electric cells E1, E2, E3, E4, etc., at spaced points along the belt.

The slat-belt D comprises a flexible backing strip D*a* to which is attached wooden slats or laths D*b*. The slats which do not cary cells may be straight slats as shown in Fig. 8. The slats which carry the photo-electric cells are provided on their outer surface with a metallic covering D*c* which may be shaped to form the screw-sockets for receiving the photo-electric cell E, or the electric lamp L, see Fig. 8*b*. Both the cells and the lamps are preferably constructed with screw plug connectors after the fashion of an ordinary electric lamp. The cathode K of the cell is provided with a central contact pin E*a* which extends to the rear of the belt D, and is adapted to contact with a plurality of spring contact elements *18* mounted upon a conducting plate *18a* in the rear of the camera *2*. The arrangement of one cell group is illustrated in Fig. 8. For the purpose of illustration, I have shown one group of *17* cells mounted on three slats of special outline. Referring to Fig. 8, slat (*a*) carries cells *1*, *2*, *3*, *4*, *5*, *6*, and *7*; slat (*b*) carries *8*, *9*, *10*, *11*, *12*, *13*, and *14*; and slat (*c*) carries cells *15*, *16* and *17*. Slat *d* does not carry cells but has a special shape to conform to the shape of slat (*a*). Slat (*e*) does not carry cells and is a plain straight slat. The shape of slat (*b*) is shown in Figure *8a* The group E2 of photo-electric cells is the same as group E1 shown in Figure 8, and is spaced from group E1 along the slat-belt D a distance equal to a screen height, that is, a distance equal to the width of the picture on the belt D. Cell groups E3 and E4 are like cell groups E1 and E2 and are likewise spaced apart a distance equal to a screen height.

The grid or anode G of the cell E is connected to the screw shell of the plug of the cell and is, therefore, connected to the metallic plate D*c* of the slat. A conducting rod or bar *19* is provided along one edge of the belt D and carries a number of spring contact fingers *19a* arranged to engage the metallic strips D*c* on the face of the slats D*b* (see Fig. 8*b*). The bar *19* is provided with a connecting terminal *19b*, leading to the transmitting circuit. The metallic plate *18a* is also provided with a terminal connection *18b* leading to the transmitting circuit. A perforated band A is trained over rolls *9a* and *9b* and passes between the spring contact fingers *18* and the cathode pins E*a* of the photo-electric cell groups. The band A may be driven in any suitable manner, for example, in the manner shown in Figure 2, and an intermittent drive connection is provided between roll *9a* and roll *17a* to effect step-by-step movement of slat-belt D. This intermittent drive may be a combination of a single tooth gear on the shaft of roll *9a* cooperating with a multi-tooth gear on the shaft of roll *17a*. The arrangement of perforations on band A is illustrated in the lower part of Figure 8.

Operation of the arrangement shown in Figure 6 is as follows: From an inspection of Figure 8 in connection with Figure 6, it will be seen that a circuit between terminal conductors *18b* and *19b* will be completed through one of the cells E only when a perforation in band A coincides in position with a cathode pin on a cell. Referring to Figure 8, as the band A moves upward, the cells will be connected into the transmitter circuit in the order in which they are numbered. When band A travels one screen height, the intermittent drive between rolls *9a* and *17a* causes slat-belt D to move downward a distance slightly greater than the diameter of a perforation in band A. Upon a movement of band A through another screen height, the entire group of cells will be again connected to the circuit in succession in the order in which they are numbered. Continued operation in this manner effects a step-by-step movement of the cell group downwardly across the entire picture area, and at each position of the group, all the cells are scanned in succession.

From an inspection of Figure 8, it will be observed that due to the particular arrangement of the cells on the slat-belt, I am enabled to employ photo-electric cells having a greater diameter than the elementary area of the picture, the size of which is indicated by the size of the perforations in band A. It will thus be seen that this arrangement has considerable advantage from a commercial standpoint in the manufacture of apparatus in which it is very difficult to produce extremely small cells.

The arrangement shown in Figure 7 is the same as that shown in Figure 6 except that the band A is placed in front of the slat-belt D and serves as a light distributor or commutator instead of an electric circuit commutator as in Figure 6.

In the arrangement shown in Figure 7 all the photo-electric cells of any given group which lie within the picture area are connected to the transmitting circuit in parallel, but only those cells which are energized by light passing through a perforation in band A are effective in producing photo-electric currents for operating the transmitting apparatus. In Figure 6 all the cells within the picture area are subjected to light from the picture image, and are successively rendered operative by completion of the electric circuit through the operation of band A acting as a commutator, whereas in Figure 7 the electric circuits for the cells within the picture area remain completed, and the cells are rendered operative in succession by the action of the band A in admitting the light to the cells in proper sequence.

Both the arrangements shown in Figures 6 and 7 may be employed at a receiving station for reproducing a transmitted picture by replacing the cells E with lamps L as shown at the left in Figure 8*b*. As will be apparent one terminal of the filament of each lamp is connected to the

screw-shell of the plug connector which maintains contact with the metal strip Dc on the face of the slat carrying the lamp, and the other terminal of the filament is connected to a connecting pin La extending to the rear of the slat in the same manner as the cathode pin Ea of the cell E. When used as a receiving device the terminal conductors 18b and 19b are connected to the output terminal of the receiving amplifier circuit, and the lamps in slat-belt D are operated in succession with an intensity in accordance with the strength of the signal received at any given instance.

The flexible backing Da of slat-belt D is provided with sprocket perforations along its edges as shown in Figure 8.

In Figure 9 I have shown diagrammatically an arrangement for indicating the condition of synchronism between the transmitting and receiving apparatus. I prefer to drive the transmitting and receiving apparatus by electric motors provided with a device for the manual control of speed. In Figure 9 the numeral 20 indicates a roll for driving band B, or any other device which is driven at a speed proportional to the driving motor. Secured to roll 20 is a rotating arm 20a adapted to engage one arm of a bell crank lever 21 which is mounted upon a support 21a, and biased to one position by a spring 21b. The other arm of the bell crank lever 21 is connected to a slidable insulating strip 22 by a link element 21c. The reciprocating member 22 is provided with a conducting strip 22a to which is connected one terminal of battery 25. A pendulum 23 mounted upon a fulcrum 23a on a support 23b is provided with an arcuate conducting member 23c to which is attached the other terminal of battery 25 in series with a lamp 24.

Operation of the arrangement shown in Figure 9 is as follows: Both the transmitting and receiving stations are provided with apparatus shown in Figure 9, and the two pendulums are identical and have the same time period. The relation between the speed of rotation of arm 20a and the period of the pendulum 23 must be such that as the arm 20a causes the reciprocating member 22 to advance towards the arcuate member 23c an impulse will be imparted to the pendulum to keep it swinging. It will be understood that the frequency of oscillation of the pendulum may be much lower than the frequency of rotation of arm 20a, but the frequency of the arm 20a must be equal to or a multiple of the frequency of the pendulum. So long as the driving motor is operating at the proper speed, the arcuate member 23c swings away from the reciprocating member 22 before the circuit is completed through the lamp 24, however, should the motor increase in speed, the reciprocating member 22 would be advanced towards the member 23c and a circuit would be completed momentarily causing lamp 24 to flash. The flashing of lamp 24 indicates that the motor is not operating at the proper speed, and a manual adjustment of the driving motor rheostat may be made until synchronism is restored and indicated by a dark condition of the lamp.

In Figure 10a I have illustrated five different arrangements of perforations in band A in combination with band B as employed in the two-band arrangements of Figures 2, 4 and 5. Figure 10b illustrates a two-row arrangement of perforations in band B, with five different arrangements of perforations in band A. Figure 10c shows band B in front of band A, with two arrangements of perforations in band B. Figure 10d shows the relation between screen 4 and band C employed in Figure 1. Figure 10e illustrates the arrangement of perforations in band A employed in Figure 14. Figures 10f and 10g illustrate further arrangements of perforations in bands A and B of the two-band arrangement. It is obvious that many other variations in the arrangement of the perforations may be made without departing from my invention.

Another form of scanning device is shown in Figures 11, 12 and 13. In this arrangement, a plurality of shutter or door members 26a, 26b, 26c, 26d, 26e, 26f, 26g and 26h are pivotally mounted in a rectangular frame 27 upon pintles 28. A second set of parallel doors 26i, 26j, 26k, 26m, 26p, 26q and 26r are pivotally supported in frame 27 at right angles to the first set of doors 26a to 26h upon pintles 28a. Each pintle may extend beyond the frame 27 a short distance and be provided with a spring 29, one end of which is secured to the frame 27 and the other end secured to the pintle 29 in order to bias each door to its closed position. The doors 26 have a width equal to the width of an elementary area of the picture area P indicated in dotted lines in Figure 11, and each door is provided with an extension 30 at right angles to the plane of the door. The form and arrangement of the doors is indicated in Figure 13. The door and the extension 30 may be formed of a single piece of metal bent around and welded to the pintles 28 in a well known manner. The extensions 30 are provided for the purpose of serving as cam surfaces cooperating with a movable door opener for opening the doors in sequence as will be explained hereinafter.

Along one side of the frame 27 is arranged a chain-belt 31 trained over sprocket wheels 32a and 32b. Sprocket wheel 32a (or 32b) is driven at a constant speed from a suitable source of power (not shown). A second chain-belt 33 is arranged along an adjacent side of frame 27 at right angles to chain-belt 31 and is trained over sprocket wheels 34a and 34b. Chain-belt 33 is driven by step-by-step movement by a single-tooth gear 32c mounted on the shaft of sprocket wheel 32b cooperating with a multi-tooth gear 34c mounted on the shaft of sprocket wheel 34a.

Chain 31 is provided with a plurality of door operator fingers 31a, 31b, 31c, 31d spaced along the length of the chain a distance equal to the height of the picture area P. Likewise, chain 33 is provided with a plurality of door operators 33a, 33b and 33c spaced along the length of the chain a distance equal to the width of the picture area P. The frame 27 is provided with slots 27a and 27b to permit the passage of the door operators mounted on chain 31, and slots 27c and 27d to permit the passage of the door operators mounted on chain 33.

Operation of the arrangement shown in Figures 11 to 13 is as follows: As an operator on chain 31 passes through the frame 27 it engages the extensions 30 and opens the doors 26i to 26r in sequence. In a like manner, the operators on chain 33 engage the extensions 30 on doors 26a to 26h in succession, however, chain 33 is operated in step-by-step movement by chain 31, and the drive connection is such that an operator on chain 33 maintains one of the vertical doors open while an operator on chain 31 travels the complete height of the frame 27 and opens each of the horizontal doors. After the uppermost horizontal door has been opened and closed, the single-tooth gear 32c engages the multi-tooth gear 34c and steps the

chain 33 forward to open another vertical door and permit the preceding door to close. For example, with the apparatus in the position shown in Figure 11, the operator 31a is holding horizontal door 26q open, and operator 33a is holding vertical door 26f open. The simultaneous opening of doors 26f and 26q permits the elementary picture area 35 to be exposed to the photo-electric cell, (not shown). As operator 31a moves upward it engages the extension 30 on door 26r to open this door, and door 26q is permitted to close under the action of spring 29. In case spring 29 does not have sufficient force to close the door, the preceding door is automatically closed by the door being opened by engagement with the extension 33 on the preceding door and forcing it closed. After operator 31a passes door 26r the chain 33 is stepped forward to open the vertical door 26g and permit the closing of door 26f. The door 26g now remains open until the operator 31b opens and closes the horizontal doors 26t to 26r in sequence. The foregoing operation continues until all of the elementary picture areas constituting the picture area P have been exposed in succession to the photo-electric cell. The cell employed in Figure 11 may be the single cell arrangement of Figure 1, or the multiple cell arrangement in Figure 5. It is apparent that the device shown in Figures 11 to 13 may be used at a receiving station as well as at a transmitting station.

In Figures 14 and 14a, I have shown an arrangement for transmitting or receiving pictures in color. The scanning device employed in this arrangement is the same as that described in connection with Figures 2 and 2a, (except for the perforations on band A) and like parts are indicated by the same reference characters. An endless, translucent belt 36 is trained over a pair of rolls 37a and 37b, and one side of the film is arranged to pass in front of the objective lens 3 as indicated at 36a, while the other side is by-passed around the objective lens by rolls 38a and 38b. The film 36 is made up of horizontal sections 36c, 36d and 36e, being colored blue, yellow, and red, respectively. These sections are repeated around the entire film in the order stated above. Each colored section is of a width equal to the width of an elementary area of the picture area. The scanning band A has groups of three perforations in the same order as the colors appear on the sections of film 36, i. e., blue, yellow and red, and is caused to move past the plane of the image area in the same direction and at the same rate as the film 36. The arrangement of the perforations on band A is shown in Figure 10e. The driving motor is attached to the shaft of roll 9, and roll 37a is driven from roll 9 by suitable gearing including a shaft 39. The perforations in band B may be arranged in accordance with any of the arrangements shown in Figures 10a and 10b. Band B is driven from the driving roll of band A in step-by-step movement as described above in connection with Figure 2. The front of the camera is provided with a light-proof slit to exclude the light from the wrong film sections.

Operation of the arrangement shown in Figures 14 and 14a is as follows: For each position of the band B, band A travels a distance equal to three times the screen height, and each perforation in band B is traversed by three perforations in band A corresponding to the three primary colors. The result of band B operating in connection with band A and the three colored films 36, is that every exposure of a perforation of band B has impressed upon it three perforations of band A. Thus, when a red section of the film is in front of the lens, the first of the series of three perforations of band A allows a red light beam to pass through the band B to the cell, in the case of a transmitter, and in the case of a receiver, allows a red light to pass to the projection screen. In a like manner a yellow and a blue light beam are permitted to pass by the second and third of the series of the three perforations of band A, and these three colors blending together produces the desired natural color. For example, if an orange colored object be placed before the lens of the transmitter, the red section allows its component of the object color to be transmitted, while the yellow section allows its component to be transmitted, each setting up a current in the photo-electric cell, while the blue section produces no effect. In a similar manner, the natural colors are reproduced in the receiver set.

Instead of employing a separate transparent band 36 to produce the three primary colors, I may make band A of transparent material with the places normally occupied by the perforations colored the proper colors and having the remainder of the band made opaque, that is, the band will be an opaque band having transparent spots arranged in accordance with the perforations as shown in Figure 10e and being colored in the order of blue, yellow, and red, respectively.

It will be understood that the various forms of my invention disclosed herein may be employed for the transmission and reception of photographs, drawings, sketches and the like, commonly known as "still" pictures at any desired rate, and that by speeding up the rate of scanning operation to a rate of from 12 to 15 pictures per second, the arrangements may be employed for the transmission of moving pictures, which operation is commonly referred to as "television." In the appended claims, the word "picture" is used in a generic sense to include either a still picture or a moving picture.

While I have selected specific embodiments of my invention for the purpose of illustrating the same, it will be understood that various changes and modifications may be made in these embodiments without departing from the essence of the invention.

What I claim is:

1. In a picture transmission system, the combination of means for forming an image of a picture to be transmitted, a light-sensitive cell arranged to be influenced by light from said image, two light-screens interposed between said image and cell, each having a plurality of apertures formed therein of a size equal to an elementary area of said image, means for advancing one of said screens across said image area in step-by-step movement, and means for moving said second screen to cause apertures in said second screen to coincide with the apertures in said first screen in succession for each step of movement of the first screen.

2. In a picture transmission system, the combination of a light-sensitive surface comprising a plurality of contiguous elementary light-sensitive elements each provided with electric circuit connections, means for forming an image of a picture to be transmitted upon said light-sensitive surface, and means for successively connecting said light-sensitive elements in circuit with the transmitting apparatus comprising a

pair of superimposed bands interposed between contacts in said electric circuits and each having a plurality of apertures formed therein and being adapted to maintain said contacts open except upon coincidence of apertures in said pair of bands.

3. In a picture transmission system, means for forming an image of a picture to be transmitted, a light-sensitive cell, means for exposing said light-sensitive cell to light admitted from each elementary area of said image in succession, and means for successively interposing color filters of three different colors in the rays forming said image during each exposure of an elementary area.

4. In a picture transmission system, a scanning device comprising two superimposed elements each provided with a plurality of apertures, means for moving one of said elements in step-by-step movement, and means for moving the second element to cause the apertures therein to coincide with the apertures in the first element in succession for each step of movement of the first element.

5. In a picture transmission system, the combination of a photo-electric cell having a flat light-sensitive surface large enough to receive a complete image of a picture to be transmitted, means for forming an image of said picture upon the surface of said cell, light intercepting means arranged immediately in front of said cell, said means comprising two light screens each having a plurality of apertures formed therein of a size equal to an elementary area of said image, and means for producing relative movement between said screens for causing said apertures to coincide successively over different elementary areas of said cell.

6. A scanning apparatus consisting of two media traversing an image area, each of said media being provided with light-permeable areas, the said light-permeable areas of the first medium being arranged parallel to each other and at an angle to those on the second of said media, the first of said media moving at a slower rate of speed and having its light permeable areas spaced approximately an image-width apart and forming a light beam of rectangular cross-section, the second of said media moving at a greater rate of speed and having its light permeable areas spaced a fraction of an image-width apart, and causing by their repeated, rapid intersection with said rectangular light beam a travelling light point which traverses the said image area in the form of a series of transverse lines of varying intensity in accordance with an image.

7. A scanning apparatus consisting of two media traversing an image area in opposite directions, each of said media being provided with light-permeable areas, the said light-permeable areas on the first of said media being placed parallel to each other and at an angle to those on the second of said media, the first of said media moving at a comparatively slow rate of speed and having its said light permeable areas spaced an image-width apart, said light permeable areas in turn forming a light beam of rectangular cross sectional area, the second of said media moving at a comparatively high rate of speed and having its light permeable areas spaced a fraction of a picture width apart in order to increase the number of scanning lines in the image area, and causing by their repeated, rapid intersections with the said rectangular light beam a travelling light point, which traverses the said image area in the form of a series of transverse lines of varying intensity in accordance with an image.

8. A scanning apparatus consisting of a plurality of moving media coacting with an optical element to produce an image, each of said media being provided with a series of light-permeable areas consisting of a plurality of parallel lines, the lines on one of said media being disposed at an angle to those on the second of said media, each of said lines being composed of a plurality of openings, one of said openings in one of said media coinciding with one of said openings in the second of said media to produce a distinct, individual light beam of an intensity corresponding to the intensity of the image at the portion of the image in which it is produced, which is gradually produced by the gradual coincidence of said openings and which is gradually extinguished by the gradual noncoincidence of said openings, while an adjacent opening on each of said media successively coincide to produce an adjacent, individual light beam of an intensity corresponding to the intensity of the portion of the image in which it is produced, until a succession of such gradually produced, individual light beams has been produced and extinguished successively throughout said image area, thus constituting a visual image.

9. A scanning apparatus consisting of a plurality of oppositely moving media coacting with an optical element to produce an image, each of said media being provided with a series of light-permeable areas consisting of a plurality of parallel lines, the lines on one of said media being disposed at an angle to those on the second of said media, each of said lines being composed of a plurality of openings, one of said openings in one of said media coinciding with one of said openings in the second of said media to produce a distinct, individual light beam of an intensity corresponding to the intensity of the image at the point where it is produced, which is gradually produced by the gradual coincidence of said openings and which is gradually extinguished by the gradual noncoincidence of said openings, while an adjacent opening on each of said media successively coincides to produce an adjacent, individual light beam of an intensity corresponding to the intensity of the portion of the image in which it is produced, until a succession of such gradually produced, individual light beams has been produced and extinguished successively throughout said image area, thus constituting a visual image.

10. A scanning apparatus consisting of two media traversing an image area, each of said media being provided with light-permeable areas consisting of rows of openings, the said light-permeable areas of the first medium being arranged parallel to each other and at an angle to those on the second of said media, the first of said media moving at a slower rate of speed and having its light permeable area spaced approximately an image-width apart and forming a light beam of rectangular cross-section but consisting of a series of light beams formed by said openings, the second of said media moving at a greater speed and having its light-permeable areas spaced a fraction of an image-width apart, and causing by their repeated intersections with said rectangularly grouped light beams a series of distinct, individual light beams of varying intensity throughout an image area.

F. L. MIDDELRAAD.