W. W. LASKER.

SORTING MACHINE.

APPLICATION FILED JUNE 13, 1918.

1,315,370.

Patented Sept. 9, 1919.

4 SHEETS—SHEET 1.

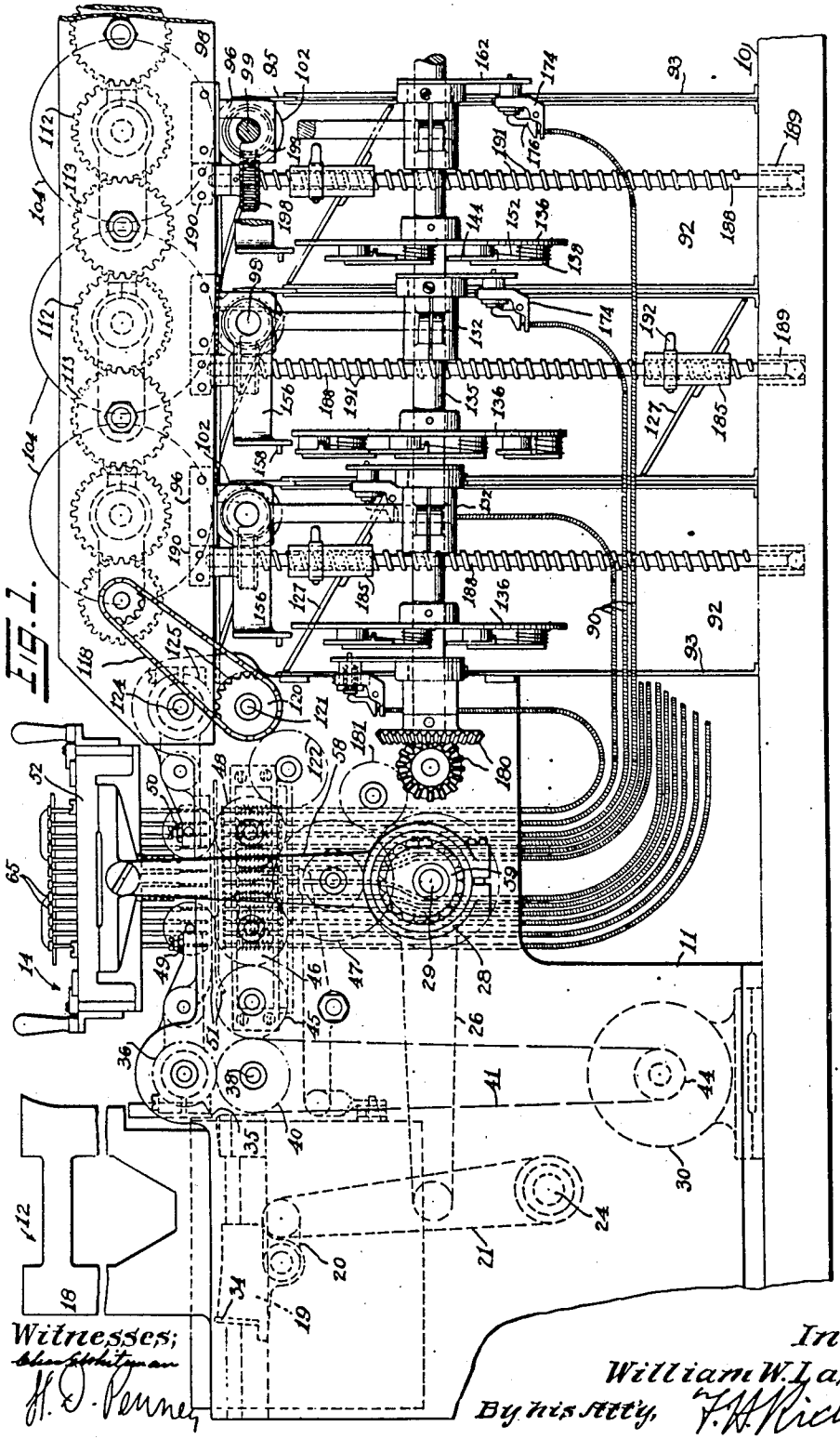

FIG. 1.

Witnesses;

H. D. Penney

Inventor;

William W. Lasker,

By his Atty, F. H. Richards

W. W. LASKER.

SORTING MACHINE.

APPLICATION FILED JUNE 13, 1918.

1,315,370.

Patented Sept. 9, 1919.

4 SHEETS—SHEET 2.

Fig. 2.

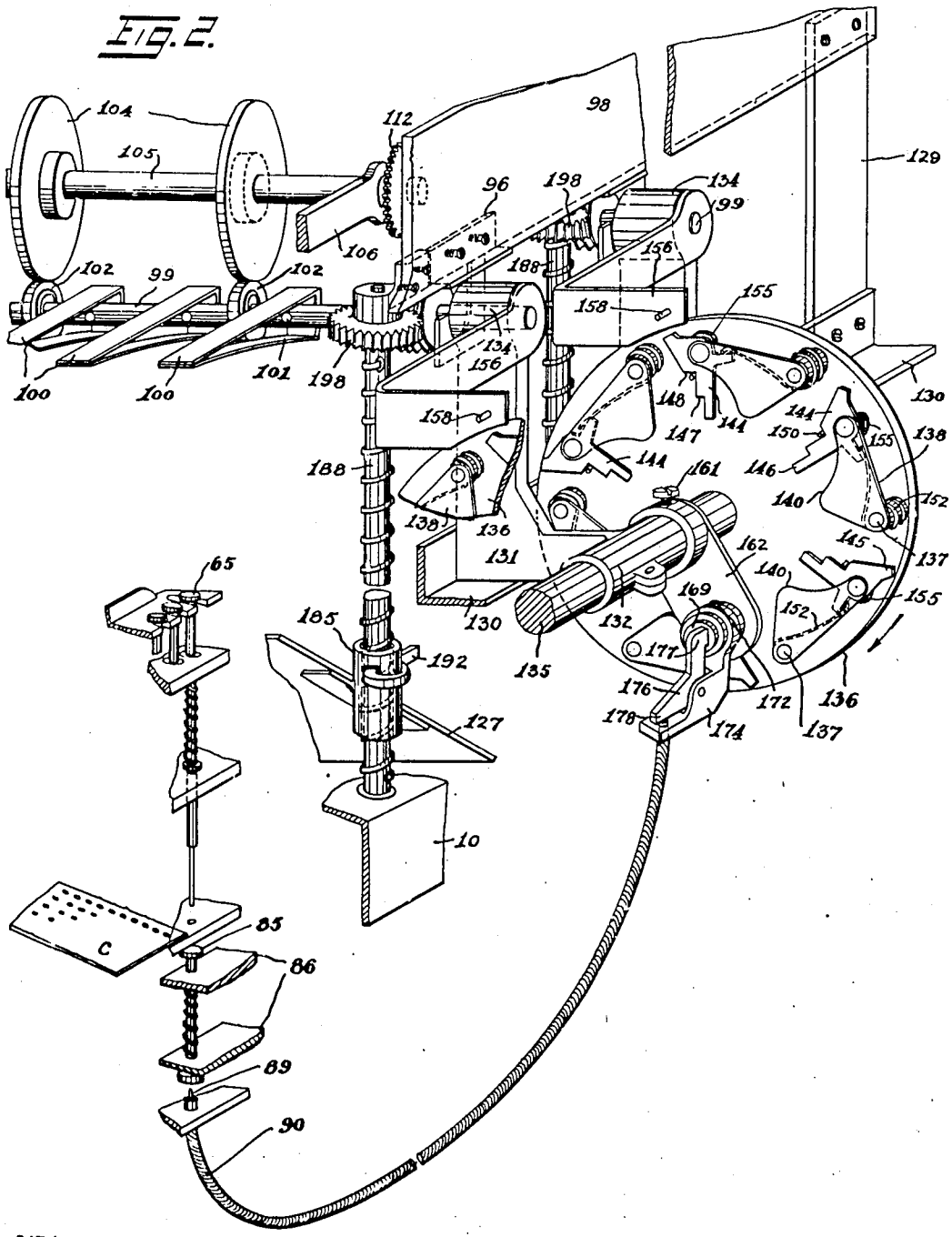

Witnesses;

H. D. Penney

Inventor:

William W. Lasker,

By his Atty, F. W. Richards.

W. W. LASKER.

SORTING MACHINE.

APPLICATION FILED JUNE 13, 1918.

1,315,370.

Patented Sept. 9, 1919.

4 SHEE 3--SHEET 3.

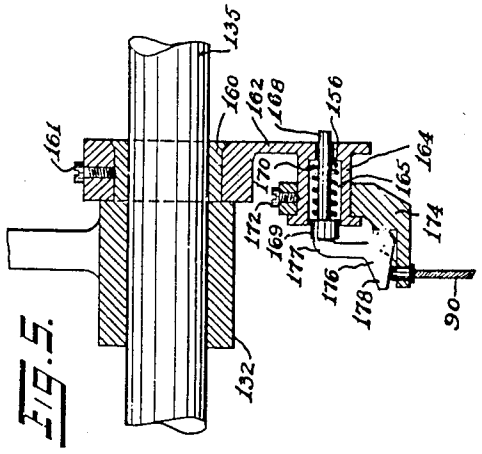

FIG. 5.

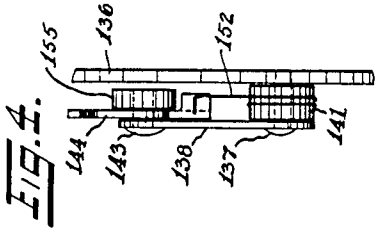

FIG. 4.

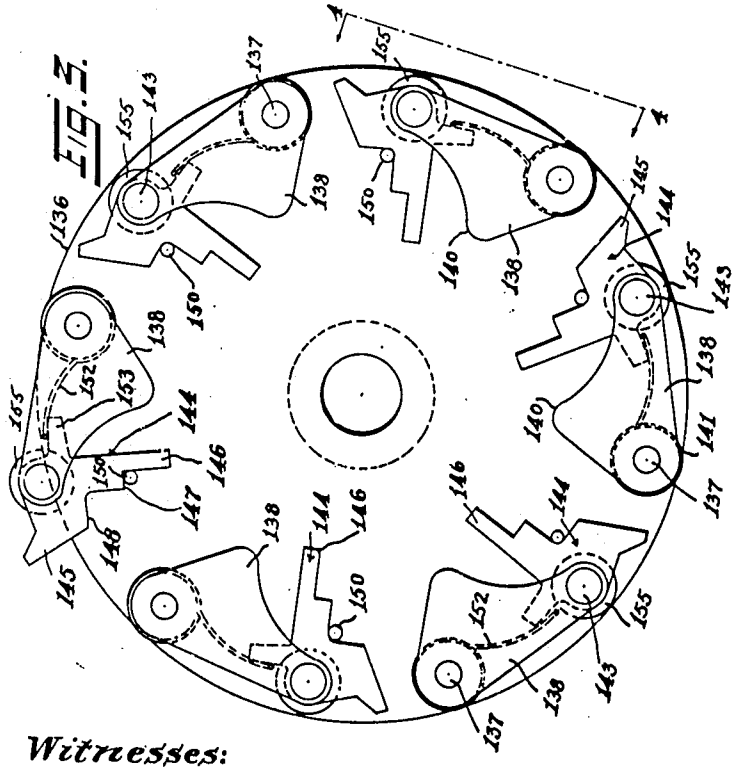

FIG. 3.

Witnesses:

Chas. E. Hartman

H. D. Penney

Inventor:

William W. Lasker,

By his Att'y, W. H. Richards.

W. W. LASKER.

SORTING MACHINE.

APPLICATION FILED JUNE 13, 1918.

1,315,370. Patented Sept. 9, 1919.

4 SHEETS—SHEET 4.

Fig. 6.

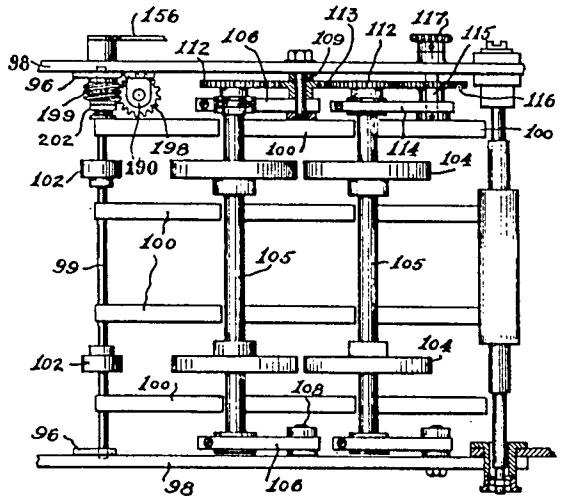

Fig. 7.

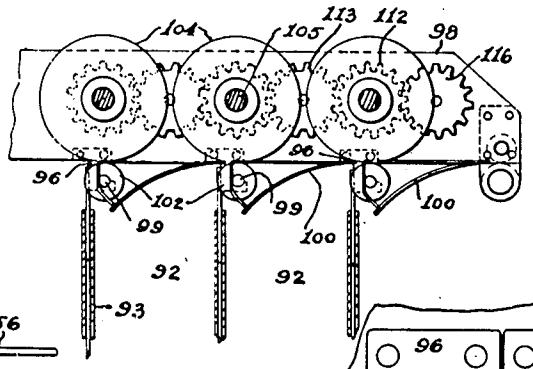

Fig. 8.

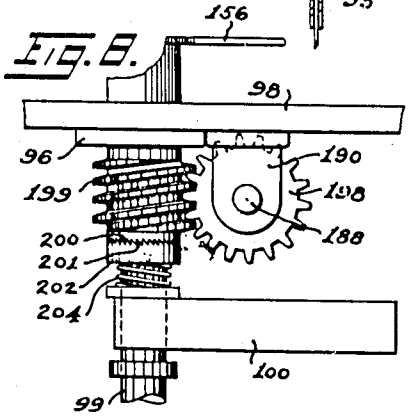

Fig. 9.

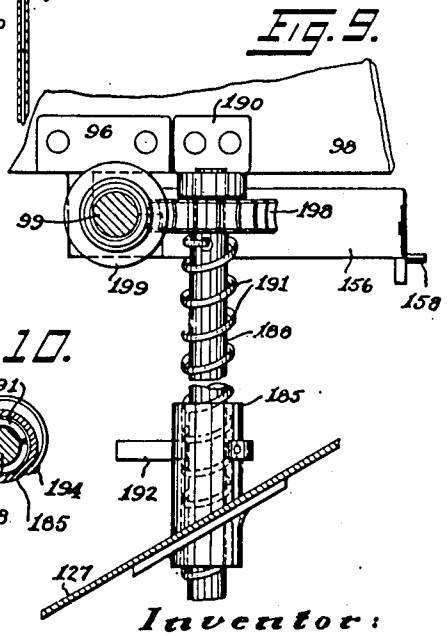

Fig. 10.

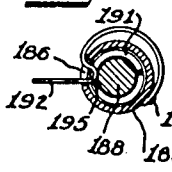

Witnesses;

H. D. Penney

Inventor:

William W. Lasker,

By his Att'y, F. W. Richard

UNITED STATES PATENT OFFICE.

WILLIAM W. LASKER, OF BROOKLYN, NEW YORK, ASSIGNOR TO POWERS ACCOUNTING MACHINE COMPANY, OF NEW YORK, N. Y., A CORPORATION OF DELAWARE.

SORTING-MACHINE.

1,315,370. Specification of Letters Patent. Patented Sept. 9, 1919.

Application filed June 13, 1918. Serial No. 239,851.

To all whom it may concern:

Be it known that I, WILLIAM W. LASKER, a citizen of the United States, residing in the borough of Brooklyn, in the county of Kings and State of New York, have invented certain new and useful Improvements in Sorting-Machines, of which the following is a specification.

This invention relates to machines for sorting perforated cards such as are used in automatic calculating and adding machines.

One of the objects of the invention is to provide a machine in which the conveyer for conveying the cards from the analyzer to the compartments simultaneously conveys several cards at a time, and deposits each in its appropriate compartment without in any way interfering with or being delayed by the proper depositing of the other cards in their compartments.

Another object is to provide an improved timing arrangement comprising a timing member or disk having thereon settable means of novel form adapted to be set by setting means operated from the analyzer, and to move at a uniform speed so as to operate deflectors for guiding the cards into the compartments just at the instant that the card arrives at its appropriate compartment.

Another object of the invention is to provide a suitable means for lowering the card receiving plate or floor of each compartment as each card is fed into such compartment, thus doing away with spring arrangements as heretofore used.

While herein I describe details of the invention, it is understood that the invention is not limited to these, since the details of construction and combination may be greatly varied without departing from the spirit and scope of the invention as claimed.

In the accompanying drawing showing by way of example, one of many possible embodiments of the invention—

Figure 1 is a side elevation of the machine:

Fig. 2 is an enlarged fragmental perspective view showing the timing arrangement;

Fig. 3 is a face view of a timing disk with the settable cams thereon;

Fig. 4 is an edge view of one of the settable cams and its associated parts taken from the line 4—4 of Fig. 3;

Fig. 5 is a sectional view taken through the setting means for setting the settable cams;

Fig. 6 is a plan view showing the arrangements of the deflectors and the means for guiding the cards thereto;

Fig. 7 is a side view of the mechanism shown in Fig. 6;

Fig. 8 is an enlarged plan showing the details of construction of the means for operating the lowering means of the card receiving plate;

Fig. 9 is a side elevation showing a fragment of the means for lowering the receiving plate; and

Fig. 10 is a section taken on the line 10—10 of Fig. 9.

As shown in the embodiment of Fig. 1, the machine comprises a base 10 on which are mounted a pair of side plates 11 on which are mounted the card feeding means 12, the analyzer 14 and other parts of the mechanism to be mentioned. The card feeding means 12 of the analyzer 14 are similar in construction to that described in the application of James Powers, Serial No. 33,863, filed June 14, 1915, and the application of W. W. Lasker, Serial No. 188,718, filed Aug. 29, 1917; hence they need not now be shown or described in all their details.

The upper part of the feeding means comprises a magazine hopper 18 adapted to receive a pack of cards to be sorted; and at the lower part of the feeding means there is provided a reciprocating block 19 guided in the lower part of the feeding means and connected by means of a link 20 to a lever arm 21 mounted on the shaft 24 carried between the side plates 11, and connected by the link 26 having its end 28 eccentrically mounted on the eccentric shaft 29 suitably driven, as will be hereinafter described, from the motor 30, whereby the block 19 is reciprocated in the lower part of the maga-

zine 18. The block 19 is provided with a picker knife 34 whereby when the block is reciprocated the lowermost card in the magazine is fed forward through the micrometer slot 35 at the outlet side of the feeding means.

From the micrometer slot 35 the card is received between the roller 36 and a roller mounted on a shaft 38 suitably driven by the sprocket 40 and chain 41 or the like from the drive wheel 44 of the motor 30. From the shaft 38 suitable gears 45, 46, and 47 convey power to the eccentric shaft 29 and to a conveyer roller coöperating with the conveyer rollers 49 and 50, which latter are adapted to withdraw the cards from the analyzer 14 and deliver them to the conveying means to be later described.

The cards are conveyed by the roller 49 to the coöperating roller into place between the perforated plates 51 suitably supported on the side plates 11. The pin box 52 is disposed above the perforated plates 51 and is vertically reciprocated by means of links 58 having their lower ends receiving the eccentric 59 of the eccentric shaft 29. The pin box is provided with rows of pins 65 which may be caused to register with any one of the rows of perforations of the plates 50 by means of suitable adjustments as explained in said copending applications.

The pins 65, as explained in the first mentioned of said applications, are yieldably pressed against the perforated cards, and upon finding a perforation pass through the card during the downward motion of the pin box and are then locked into retrograde motion relative to the pin box, after which continued downward movement of the pin causes the pin to bear against one of the plungers 85 (Fig. 2) which correspond in number to the pins 65 and are carried in suitable guide plates 86 transversely slidably mounted between the side plates 11, as explained in said copending applications. The plungers 85 when depressed by the analyzing pins, transmit motion to the inner wires 89 and push cables 90 for operating the selecting mechanism of the card conveyer as will be explained.

It is, of course, necessary that the plungers 85 always remain in register with the analyzing pins 65 as for instance when the pin box is adjusted so that the pins register with the row of perforations which are to be analyzed. These mechanisms, however, form no part of the present invention and are described in detail in said last named application.

The cards are received from the roller 50 (Fig. 1) and are finally conveyed to the compartments 91 formed by transverse partitions 93 mounted at their lower ends upon the base 10 and having their upper ends secured to retaining pieces 95 carried upon the bearing supports 96 mounted upon the lower edges of the extension plates 98 secured to the side plates 11. Rotatably mounted in said bearing supports 96 are a plurality of deflector shafts 99, one for each compartment, on which are secured deflectors 100 (Fig. 2) formed of strips of material bent upon themselves and secured by means of rivets 101 to the deflector shaft. Upon each deflector shaft 99 there are rotatably mounted a pair of lower guide rollers 102 against which are yieldably pressed the upper guide rollers 104 (Fig. 1) fixed upon the upper shafts 105 (Fig. 7) rotatabdy mounted in brackets 106 loosely mounted on pivot bolts 108 and 109 secured to the extension plates 98.

On each upper shaft 105 there is fixed a pinion 112 meshing with an idler 113 rotatably mounted on one of the bolts 109.

The end bracket 114 is loosely mounted on a short bearing shaft 115 on which is fixed a drive pinion 116 and a drive sprocket 117, the latter being driven by means of a sprocket joint 118, (Fig. 1) on the sprocket wheel 120 carried on the shaft 121 operatively connected to a gear wheel 122 in turn driven from the gear 48. On the shafts 121 and 124 are mounted rollers 125 which receive the cards from the analyzing plates 51 and convey them to the rollers 102 and 104 which latter convey the cards in a horizontal path above the deflectors 100, when the deflectors are in their normal horizontal position as shown in Figs. 2 and 7. When the deflectors 100 are deflected upwardly so that a card passing from the analyzing plate passes to the underside of the deflector, such card is deflected into one of the compartments 92 on to the receiving plate 127.

Means for operating the deflector will now be described.

Mounted upon one of the side supports 11 and a supporting standard 129 (Fig. 2) is a bracket support 130 upon which are mounted elbow brackets 131 provided with timing shaft bearings 132 and deflector shaft bearings 134, the latter receiving the ends of the deflector shafts 99. In the bearings 132 there is disposed a timing shaft 135 on which are fixed, one for each compartment, a plurality of timing disks 136. Disposed around each timing disk equal angles apart, are a plurality of tripping supports or pivots 137 on which are pivotally mounted settable tripping cams 138 provided at their inner edges with a cam projection 140. Said cam is held spaced from the disk by means of a spacing collar 141 (Fig. 4). At the free end of each settable cam there is secured a pivot pin 143 on which is pivotally mounted a detent 144 provided with an upwardly pointing releasing finger 145 and an in-

wardly pointing detent finger 146 provided with an active detent shoulder 147 and an inactive detent shoulder 148 either one of which is adapted to rest upon the detent pin 150 mounted upon the disk. Said finger 144 is held pressed against the detent pin by means of a coil spring 152 wrapped around the column 141 and pressing against a projection 153 carried upon the detent 144.

Upon each pivot pin 143 there is also carried a tripping roller 155, adapted, when the active shoulder 147 engages the detent pin, to engage the operating arm 156 (Fig. 2) fixed upon the deflector shaft 99, whereby as said disk rotates and brings said roller into contact with the operating arm 156 mounted on the shaft 99, the deflectors 100 are raised and deflect the cards into the compartments. After the operating arm 156 has thus been operated, the releasing finger 145 engages the releasing pin 158 carried upon the outer end of the operating arm 158, whereby said active shoulder 147 is forced away from the detent pin 150 and the spring 152 causes the tripping cam and detent to move inwardly until the detent pin 150 is engaged by the inactive shoulder 148.

Each timing shaft bearing box 132 (Fig. 5) is provided with a reduced extension 160 (Fig. 5) on which is fixed by means of a set screw 161, a plunger bracket 162 provided with a boss 164 provided with a longitudinal bore 165 reduced at its inner end to form an annular shoulder 156. In each bore there is slidably disposed a plunger 168 provided with a head 169 between which head and said shoulder 156 there is disposed a coil spring 170 for holding the plunger retracted. Upon each boss 164 there is held fixed by means of a set screw 172, an elbow bracket 174 on which is pivotally mounted an elbow lever 176 having its active arm 177 engaging the head 169, and its motive arm 178 engaged by the inner wire of the flexible connection 90 having its outer end mounted in said elbow bracket 174.

The timing shaft 135 is rotated by means of bevel gears 180 (Fig. 1) driven by suitable gears 181 from the gear 47; and these gears are so proportioned that each time a card is analyzed in the analyzer, one of the tripping cams 138 is just coming into operative relation with one of the plungers 168.

When a card is in the analyzer and the analyzing pin 65 finds a perforation and presses upon the plunger 85 the elbow lever 176 presses inwardly the plunger 168, whereupon, the plunger engages the tripping cam 138 at that time coming into operative relation therewith.

As the various compartments 92 are placed progressively greater distances from the analyzer, it requires a greater length of time for the card passing from the analyzer to reach the compartments more remote therefrom; and provision is made for operating the deflector just at the instant that the card reaches it so that each card may be deflected into its appropriate compartment without having to wait until sufficient time has elapsed for a card to be deflected into the most remote compartment. In order to accomplish this it is merely necessary to place the plunger 168 associated with each compartment and timing disk such a distance from the associated operating arm 156 that the tripping cam which comes into operative relation with such plunger at the time that the card is in the analyzer will have just time to pass from such plunger to said operating arm as the card which ger to said operating arm as the card which operated such plunger requires to pass from the analyzer to the deflector. In order to fulfil these conditions the plungers 168 must be placed spirally around the timing shaft, the plungers associated with the most remote compartments being placed the greatest distances from the operating arm 156, such distances being measured forward from the plunger in the direction of rotation of the disks indicated by the arrow of Fig. 2. As the embodiment herein described is provided with 12 compartments, and the timing disks are provided with only six tripping cams, it is necessary that the tripping cams of one disk be placed in staggered relation with the tripping cams of the adjacent disk so that a tripping cam on every disk will be coming into operative relation with the associated plunger just at the instant that the card is being analyzed. Otherwise some of the plungers would be operated at an instant when the point of the disk midway between adjacent cams would be opposite the plunger, and no setting of the tripping cam would take place. The number of tripping cams could be either greater or less than shown, if desired.

Now will be described the means for lowering the receiving plate 127 a very small distance each time a card is fed into the compartment, so that there will be no danger of the card being reversed as it is deposited in the compartment.

Each receiving plate 127 is supported on an elongated sleeve 185 (Fig. 9) provided with a lateral opening 186 (Fig. 10) and slidable upon a vertical shaft 188 associated with each compartment. Each shaft 188 has its lower end received in the bearings 189 in the base 10 (Fig. 1) and its upper end received in the upper bracket 190 secured to the lower edge of the extension 98. Each vertical shaft 188 has provided thereon suitable threads 191 which may be integral with the shaft or which may comprise a spiral wire wrapped around the shaft and secured

thereto at the end of the wire so as to form a somewhat resilient support for the spring latch 192 (Fig. 10). This latch is riveted to the sleeve at 194 and has a bend therein providing a projection 195 adapted to engage between the threads 191.

Whenever a card is fed into a compartment, the vertical shaft 188 is rotated a very small amount thus lowering the sleeve 194 and plate 127. Means for accomplisning this rotation will now be described.

Upon the upper end of each vertical shaft there is fixed a worm wheel 198 engaged by a worm 199 (Fig. 8) loosely carried on the deflector shaft 99 and provided with pawl teeth 200 adapted to be engaged by the teeth 201 of the pawl collar 202 slidably mounted upon the deflector shaft 99. While the pawl collar 202 is slidable upon the deflector shaft, it is held against rotation relative thereto so that whenever the deflector shaft is operated to cause the deflectors to deflect a card into the compartment, the pawl collar 202 is rotated a small amount, thus rotating the worm 199 and consequently the vertical shaft 188. The pawl collar is yieldably held in engagement with the worm 199 by means of a small helical spring 204 disposed upon the deflector shaft.

From the foregoing the operation of the entire machine will be readily understood and need now be only very briefly summarized as follows:

By means of the reciprocating picker blade 34, each card is fed from the lower part of the magazine hopper 18 to the roller 38 whence it is carried between the perforated plates 51, after which the pin box of the analyzer is lowered and the plunger pin 85 and the plunger 168 associated with the compartment to which said card is destined, are operated, thereby bringing about the setting of the tripping cam 140 associated with said compartment just as it comes into operative relation with such plunger. When this takes place the set thipping cam 140 and the card which causes its setting, respectively travel toward the operating arm 156 and the deflectors 100 associated with such compartment; and because of the relation between the location of the plunger setting, the remoteness of the compartment from the analyzer, and the speeds of travel of the set tripping cam and the card, said tripping cam comes into operative relation with the operating lever 156 just before the card comes into operative relation with the deflectors, whereupon the set tripping cam operates the operating lever and consequently the associated deflectors and deflects the card into the appropriate compartment. The operating cam immediately passes on and permits the deflectors to fall, so that a card immediately following the card thus deflected may pass over said deflectors for a more remote compartment. If such card was destined for the same compartment, the deflectors will be immediately deflected again in the same manner just described.

As soon as the operating arm 156 has been operated, the tripping finger 145 engages the tripping pin 158 thus releasing the shoulder 147 from the detent pin 150 whereupon the tripping cam resumes its normal position. This operation is repeated until all of the cards are analyzed and deposited in their appropriate compartments.

At the same time that the deflector 100 is operated, the pawl collar 202 rotates the shaft 188 a small increment and consequently lowers the receiving plate 127.

When it is desired to lower or raise the receiving plate as for removing cards, or at the beginning of the sorting of a new batch, it is only necessary to grasp the latch 192 and remove the projection 195 from between the threads, whereupon the receiving plate may be raised or lowered to the extent desired.

I claim:

1. In an apparatus of the character described, the combination of an analyzer; a plurality of stations; a plurality of means one for each station, and controlled by a card in the analyzer, and becoming effective as such card reaches the station, for causing the card to enter the station.

2. In an apparatus of the character described, the combination of an analyzer; a plurality of stations; a plurality of means, one for each station, and each controlled by a card in the analyzer while such card is in the analyzer, and becoming effective as such card reaches the station, for causing the card to enter the station.

3. In an apparatus of the character described, the combination of an analyzer, a plurality of stations; a plurality of means, one associated with each station to the exclusion of the other stations, and controlled by a card in the analyzer and becoming effective as such card reaches the station, for causing the card to enter the station.

4. In an apparatus of the character described, the combination of an analyzer; a plurality of stations; a plurality of means, one for each station, and controlled directly by a card in the analyzer and becoming effective as such card reaches the station, for causing the card to enter the station.

5. In an apparatus of the character described, the combination of an analyzer; a plurality of stations; a plurality of means, one associated with each station to the exclusion of the other stations, and controlled directly by a card in the analyzer while such card is in the analyzer, and becoming effective as such card reaches the station, for causing the card to enter the station.

6. In an apparatus of the character de-

scribed, the combination of a plurality of sorting stations; an analyzer; an individual setting means associated with each station and adapted to be operated by a card in the analyzer destined for such station; settable means for each station adapted to be set by the associated setting means and to cause to enter the card which operated the setting means.

7. In an apparatus of the character described, the combination of a plurality of sorting stations; an analyzer; a movable timing device; a setting means associated with each station and adapted to be operated by a card in the analyzer destined for such station; settable means for each station and operated by and adapted to be set by the setting means and a means for causing a card to enter a station and adapted to be operated by a set settable means as the card which operated the associated setting means reaches the station.

8. In an apparatus of the character described, the combination of a plurality of sorting stations; an analyzer; a movable timing device; a setting means associated with each station and adapted to be operated by a card in the analyzer destined for such station; settable means associated with each station and carried on by the timing device each settable means being adapted to come successively into operative relation with the associated setting means to be set by the setting means when the latter is operated; and a means associated with each station and adapted to conduct a card into the station and to be operated by a set settable means as the card which operated the setting means reaches the station.

9. In an apparatus of the character described, the combination of a plurality of sorting stations; an analyzer means for receiving cards from the analyzer and carrying them in a path near said stations; a movable timing device associated with the stations; a setting means associated with each station and adapted to be operated by a card in the analyzer destined for such station; groups of settable means, one group for each station carried on the timing device each settable means adapted to come successively into operative relation with the associated setting means and to be set by the setting means when operated; and a deflector associated with each station and adapted to be operated by a set settable means as the card which operated the setting means reaches the station.

10. In an apparatus of the character described, the combination of a plurality of sorting stations; an analyzer; means receiving cards from the analyzer and carrying them in a path near said stations; a movable timing member movable in a plane intersecting said path; a setting means associated with each station and adapted to be operated by a card in the analyzer; a settable means carried on the timing member and adapted to be set by the setting means; and a means associated with each station and adapted to be operated by a set settable means as the card which operated such settable means reaches the station, to cause the card to enter the station.

11. In an apparatus of the character described, the combination of a plurality of sorting stations; an analyzer; movable means receiving cards from the analyzer and carrying them in a path near said stations; a movable timing member movable with a speed different from said means; a setting means associated with each station and adapted to be operated by a card in the analyzer; a settable means carried on the timing member and adapted to be set by the setting means; and a means associated with each station and adapted to be operated by a set settable means as the card which operated such settable means reaches the station, to cause the card to enter the station.

12. In an apparatus of the character described, the combination of a plurality of sorting stations; an analyzer; rotatable means receiving cards from the analyzer and carrying them in a path near said stations; a movable timing member movable on axes different from said means; a setting means associated with each associated station and adapted to be operated by a card in the analyzer; and a plurality of settable means carried on each timing member and adapted to come into operative relation with the associated setting means to cause to enter a station the card which operated such settable means.

13. In an apparatus of the character described, the combination of a plurality of sorting stations; a card analyzer; rotatable means receiving cards from the analyzer and carrying them in a path near said stations; a plurality of movable timing members movable on axes different from said means; a setting means associated with each station and adapted to be operated by a card in the analyzer destined for such station; and a plurality of settable means carried on each timing member and adapted to come successively into operative relation with the associated setting means and to be set by the setting means to cause to enter a station the card which operated such settable means.

14. In an apparatus of the character described, the combination of a plurality of sorting stations; a card anaylzer; a timing member; setting means associated with each station and adapted to be operated by the analyzer; and seperate settable means for each station carried on the timing member and having a single operative position thereon and adapted to be set by the setting

means; and a means associated with each station and adapted when operated to cause a card to move into a station and adaped to be operated by a set settable means.

15. In an apparatus of the character described, the combination of a plurality of sorting stations; an analyzer; a movable timing member; an individual setting means associated with each associated station and adapted to be operated by a card in the analyzer; and settable means for each separate station, carried on the timing member and having a normal inoperative position and a single operative position and adapted to be set by the setting means to cause to enter a station the card which operated such settable means.

16. In an apparatus of the character described, the combination of a plurality of sorting stations; an analyzer; a movable timing member; a setting means associated with each station and adapted to be operated by a card in the analyzer destined for such station; and a group of separate settable means one group for each separate station, carried on the timing member and adapted to be set by the setting means; and a means associated with each station and adapted when operated to cause a card to move into a station and adapted to be operated by a set settable means.

17. In an apparatus of the character described, the combination of a plurality of sorting stations; an analyzer; a plurality of movable timing members; one for each station; an individual setting means associated with each timing member and associated station and adapted to be operated by a card in the analyzer destined for such station; and a group of separate settable means one group for each separate station, carried on each timing member and adapted to come successively into operative relation with the associated setting means and to be set by the setting means when operated; and a means associated with each station and adapted when operated to cause a card to move into a station and adapted to be operated by a set settable means as the card which operated such settable means reaches the station.

18. In an apparatus of the character described, the combination of a plurality of sorting stations; an analyzer; a setting means associated with each station and adapted to be operated by a card in the analyzer destined for such station; a deflector associated with each station and adapted to deflect cards into the station; a settable means carried on the timing device and adapted to be set by the setting means when operated and to pass with such speed from the setting means to the deflector as to reach and actuate the deflector when the card which actuated the associated setting means and set settable means reaches the station.

19. In an apparatus of the character described, the combination of a plurality of sorting stations; an analyzer; means for receiving cards from the analyzer and carrying them in a path near said stations; a movable timing device; a setting means associated with each station and adapted to be operated by a card in the analyzer destined for such station; a deflector associated with each station and adapted to deflect cards into the station; and groups of settable means, one group for each station, carried on the timing device, the settable means being adapted to come successively into operative relation with the associated setting means and to be set by the setting means when operated and to pass with such speed and length of path from the setting means to the deflector as to reach and actuate the deflector when the card which actuated the associated setting means and set settable means reaches the station.

20. In an apparatus of the character described, the combination of a receiving means; and a means for automatically moving the receiving means an increment each time an article is fed thereto.

21. In an apparatus of the character described, the combination of a receiving means; means for feeding articles into the compartment and means between the feeding means and the receiving means for automatically moving the receiving means as the feeding means is operated.

22. In an apparatus of the character described, the combination of a receiving means; means for feeding articles to receiving means; and a connection between the feeding means and the receiving means for moving the receiving means as the feeding means is operated.

23. In an apparatus of the character described, the combination of a compartment; a receiving means therein; means for feeding articles into the compartment; and a connection between the feeding means and the receiving means for automatically moving the receiving means an increment as the feeding means is operated.

24. In an apparatus of the character described, the combination of a plurality of stations; an analyzer; means for conveying cards in a path from the analyzer; a plurality of movable timing members, one member for each station; and a means carried on each timing member and operated by a card in the analyzer and adapted to cause said card to be deflected from said path into a station.

25. In an apparatus of the character described, the combination of a plurality of stations; an analyzer; means for conducting cards in a path from the analyzer; a

deflector for each station for deflecting a card from said path to such station; a plurality of timing members, one for each station; a plurality of settable means carried on each member, each adapted to be set by a card in the analyzer, and when so set to operate the deflector when the latter is reached by said card.

26. In an apparatus of the character described, the combination of a plurality of stations; means for conducting cards in a path near said stations; a guiding means associated with each station adapted when operated to guide a card from said path to said station; a plurality of moving timing members, one associated with each station; a plurality of settable means carried on each timing member and adapted to be brought successively into operative relation with the associated guiding means, and when set to operate the guiding means; and a setting means associated with each station and adapted to be operated by a card destined for said station and to set the settable member destined to come into relation with and operate the associated guiding means when the latter is reached by said card.

27. In an apparatus of the character described, the combination of a plurality of sorting stations; an analyzer; means for receiving cards from the analyzer and carrying them in a path near said stations; a plurality of movable timing members, one for each station; a setting means associated with each timing member and associated station and adapted to be operated by a card in the analyzer destined for such station; and a plurality of settable means carried on each timing member and to come successively into operative relation with the associated setting means and to be set by the setting means when operated; and a deflector associated with each station and adapted to be operated by a set settable means as the card which operated the setting means reaches the station.

28. In an apparatus of the character described, the combination of a plurality of compartments; an analyzer; means for conveying cards from said analyzer and carrying them in a path past said compartments; a deflector associated with each compartment and adapted to deflect cards from said path into such compartment; a uniformly moving timing member associated with each compartment; a plurality of settable means carried by each of said members and adapted when set to be brought by the movement of the said member into position for operating the associated deflector; and setting means for each timing member adapted to be operated by any card in the analyzer which is destined for the associated compartment, and adapted to set the adjacent settable means, said setting means being so located that the settable means set thereby moves to position for operating the deflector at the same time that said card reaches the deflector.

29. In an apparatus of the character described, the combination of an analyzer comprising a plurality of analyzer pins; a plurality of compartments; deflectors above the compartments; a deflector shaft supporting each deflector; means for conveying cards from the analyzer to the deflectors; an operative arm on each deflector shaft; a timing shaft; timing disks on said timing shaft, one for each compartment; a plurality of tripping cams disposed around each disk, equal angles apart, and adapted to engage the associated operating arm; plunger supporting means one for each disk disposed spirally around said timing shaft; plungers in said supporting means and adapted to engage and force outwardly any one of said tripping cams for setting the latter in position to engage the associated operating arm; and means operatively connecting each plunger with a corresponding analyzing pin.

30. In an apparatus of the character described, the combination of a plurality of compartments; an analyzer comprising analyzing pins; means for conveying cards from said analyzer and past said compartments; a deflector associated with each compartment and adapted to deflect cards into the compartments; an operating arm operatively connected to each deflector; a timing disk for each compartment; tripping cams disposed around each disk and adapted to be moved to position to engage the associated operating arm; and a setting means for each disk adapted to be set by the analyzing pin corresponding to the compartment associated with said disk and adapted when operated by the analyzing pin to set the adjacent tripping cam to the latter in position to operate the associated operating arm, each setting means being so located relative to the disk that the card analyzed by the analyzing pins setting the settable means will just have time to pass from the analyzer to the deflector of the compartment to which the card is destined while the setting cam passes from such setting means to the associated operating arm.

31. In an apparatus of the character described, the combination of an analyzer; deflector shafts; deflectors secured on said deflector shafts; a guide means above said deflectors; means for conveying cards from said analyzer to said guide means; compartments substantially beneath said deflectors; operating arms fixed on said deflector shafts; a plurality of timing disks fixed on said timing shaft; a plurality of tripping cams pivotally disposed around each timing disk equal angles apart; a detent pivotally mounted on each cam and each provided with

active and inactive detent shoulder; a plurality of detent pins fixed on each disk and adapted to be engaged by said shoulders; tripping rollers on each pivot pin adapted to engage and move said operating arm; means for releasing the detents from the pins; a plunger support disposed at different angles around said shaft; a plunger in each support adapted to be moved into engagement with said cam; a flexible connection secured to said support and operated by the analyzer; and an elbow lever pivotally mounted on said support and having one arm engaging said plunger and the other arm engaged by said flexible connection.

32. In an apparatus of the character described, the combination of a pair of spaced plates; a magazine; an analyzer; deflector shafts disposed transversely of said plates; deflectors secured on said deflector shafts; a series of card guides above said deflectors; means for conveying cards from the magazine to the analyzer; means for conveying cards from said analyzer to said series; vertical transverse partitions whereby compartments are formed substantially beneath said deflectors; operating arms fixed on said deflector shafts; brackets provided with timing shaft bearings disposed longitudinally of the machine; a timing shaft disposed in said timing shaft bearings; a plurality of timing disks fixed on said timing shaft; a plurality of tripping cams pivotally disposed around each timing disk equal angles apart, the cams of each disk being arranged in staggered relation to those of the adjacent disk; a detent pivotally mounted on each cam and each provided with a releasing finger, and with active and inactive detent shoulder; a plurality of detent pins fixed on each disk and adapted to be engaged by said shoulders; tripping roller on each pivot pin adapted to engage and move said operating arm; a releasing pin on each arm and adapted to engage the detent finger to release the detent; a plunger bracket disposed on each timing bearing and disposed at different angles around said shaft; a boss on each plunger bracket; a plunger in said boss adapted to be moved into engagement with said cam; an elbow bracket fixed on said boss; a flexible connection secured to said elbow bracket and operated by the analyzer; and an elbow lever pivotally mounted on said lower bracket and having one arm engaging said plunger and the other arm operated by the flexible connection.

33. In an apparatus of the character described, the combination of a compartment; means for automatically feeding cards into the compartment; a receiving plate therein; and means for moving the receiving plates by increments each time an article is fed into the compartment.

34. In an apparatus of the character described, the combination of a compartment; a threaded shaft; an engaging means in the compartment and having threaded engagement with said shaft; and means for automatically rotating the shaft by increments each time an article is fed into the compartment.

35. In an apparatus of the character described, the combination of a compartment; a threaded shaft associated with the compartment; a plate in the compartment and having threaded engagement with said shaft; a card directing means associated with the compartment; and means for rotating said shaft an increment each time a card is directed by the directing means.

36. In an apparatus of the character described, the combination of a compartment; a threaded shaft associated with the compartment; an engaging means in said compartment and having threaded engagement with said shaft; card directing means associated with the compartment; and means for rotating said shaft an increment each time a card is directed by the directing means.

37. In an apparatus of the character described, the combination of a compartment; means for deflecting cards into said compartment; a threaded shaft associated with the compartment; a card receiving plate in the compartment and having threaded engagement with said shaft; and means operated by the deflector for rotating said shaft an increment each time a card is deflected.

38. In an apparatus of the character described, the combination of a plurality of compartments; deflectors disposed above each compartment; means for oscillating the deflectors for deflecting cards into the compartment; a threaded shaft disposed near each compartment; a sleeve on each shaft and having threaded engagement therewith; a card receiving plate in each compartment and supported on the adjacent sleeve; a toothed member operatively connected with each shaft for rotating the latter; and a pawl operated by said deflector and engaging said member.

39. In an apparatus of the character described, the combination of a plurality of compartments; deflectors disposed above each compartment; oscillatory shafts supporting said deflectors; means for conducting cards in a path near said deflector; means for oscillating said shaft and deflectors for deflecting cards from said path into the compartments; a threaded shaft disposed near each compartment; a sleeve slidable on each threaded shaft; a latch carried on each sleeve and engaging the threaded shaft; a card receiving plate on each sleeve and disposed in each adjacent compartment; a worm wheel fixed on each threaded shaft; a worm loosely mounted on

each deflector shaft and engaging said worm wheel and provided with pawl teeth; and a pawl [illegible] each deflector shaft and engaging said [illegible].

42. In an apparatus of the character described, the combination of an analyzer; a plurality of compartments; deflectors disposed above each compartment; oscillating shafts supporting said deflectors; means for feeding cards to the analyzer; means for conducting cards from said analyzer in a path near said deflectors; means controlled by the analyzer for oscillating said shaft for deflecting said deflector to deflect cards from said path into said compartments; a vertical shaft disposed at one end of each compartment; spiral threads formed on said vertical shafts; an elongated sleeve slidable on each vertical shaft; a latch on each sleeve and yieldably engaging between the turns of said threads; a card receiving plate on each sleeve and supported in each adjacent compartment; a worm wheel fixed to the upper end of each vertical shaft; a worm loosely mounted on each deflector shaft and engaging said worm wheel and provided with pawl teeth; and a toothed pawl slidably and non-rotatably mounted on each deflector shaft and yieldably held in engagement with said pawl teeth.

41. In an apparatus of the character described, the combination of a pair of spaced plates; a magazine; an analyzer; deflector shafts disposed transversely of said plates; deflector arms secured on said deflector shafts respectively; compartments below the deflectors; means for conducting cards in a path near the deflectors; means operated by said analyzer for moving the deflector shafts to cause the deflectors to deflect cards into the compartments; a vertical shaft disposed at one end of each of said compartments; spiral threads forming on said vertical shaft; an elongated sleeve slidable on each vertical shaft and provided with a lateral opening therein; a spring latch received on each sleeve and adapted to engage through lateral opening and between the turns of said thread; an inclined card receiving plate disposed in each compartment and supported on the adjacent sleeve; a worm wheel fixed to the upper end of each vertical shaft; a worm loosely mounted on each deflector shaft, and engaging said worm wheel, and provided with pawl teeth; a toothed pawl slidably and non-rotatably mounted on each deflector shaft, and provided with teeth adapted to engage said pawl teeth; and a spring disposed around said deflector shaft and adapted to press the teeth on said collar into engagement with said pawl teeth.

42. In an apparatus of the character described, the combination of a compartment; a deflector associated with said compartment; its threaded shaft disposed near the compartment; and engaging means in the compartment having threaded engagement with the threaded shaft; a member loosely mounted on said deflector shaft and operatively connected to said threaded shaft; a toothed pawl slidably and non-rotatably mounted on said deflector shaft and provided with teeth adapted to engage said member; and a spring disposed around said deflector shaft and adapted to press said pawl against said member.

43. In an apparatus of the character described, the combination of a compartment; a deflector associated with said compartment; a deflector shaft supporting said deflector; a threaded shaft disposed near the compartment; an engaging means in the compartment and having threaded engagement with the threaded shaft; a worm wheel fixed on the threaded shaft; a worm loosely mounted on the deflector shaft and engaging said worm wheel; and a pawl carried on the deflector shaft and engaging said pawl teeth.

44. In an apparatus of the character described, the combination of a plurality of compartments; deflectors disposed above each compartment; oscillatory shafts supporting said deflectors; means for conducting cards to deflectors; a threaded shaft disposed near each compartment; a plate in each compartment having threaded engagement with the adjacent threaded shaft; a worm wheel fixed on each threaded shaft; a worm loosely mounted on each deflector shaft and engaging said worm wheel and provided with pawl teeth; and a toothed pawl slidably and non-rotatably mounted on each deflector shaft and yieldably pressed against said pawl teeth.

45. In an apparatus of the character described, the combination of a plurality of compartments; a deflector disposed above each compartment; a threaded shaft disposed near each compartment; an elongated sleeve on each threaded shaft and provided with a lateral opening; a spring latch mounted on each sleeve and adapted to engage through the lateral opening and between the turns of said thread; a card receiving plate disposed in each compartment and supported on the adjacent sleeve and a connection between said deflector and said shaft whereby said shaft is rotated an increment each time the deflector is operated.

46. In an apparatus of the character described, the combination of a shaft; a resilient wire wrapped spirally around said shaft and forming yieldable threads thereon; an article engaging member engaging and and adapted to be moved by said threads; means for feeding articles to the engaging member against the resilience of said wire; and means for rotating said shaft.

47. In an apparatus of the character described, the combination of a compartment; a shaft associated with the compartment; a resilient wire wrapped spirally around said shaft and forming yieldable threads thereon; a plate in said compartment having engagement between the turns of said wire; means for feeding articles to the engaging member against the resilience of said wire; and means for rotating said shaft.

WILLIAM W. LASKER.

Witnesses:
H. M. KILPATRICK,
H. D. PENNEY.