Dec. 29, 1964 L. L. MARTIN ETAL 3,163,464

MECHANISM FOR RECLINER-ROCKER TYPE OF CHAIR

Filed Aug. 19, 1963 4 Sheets-Sheet 1

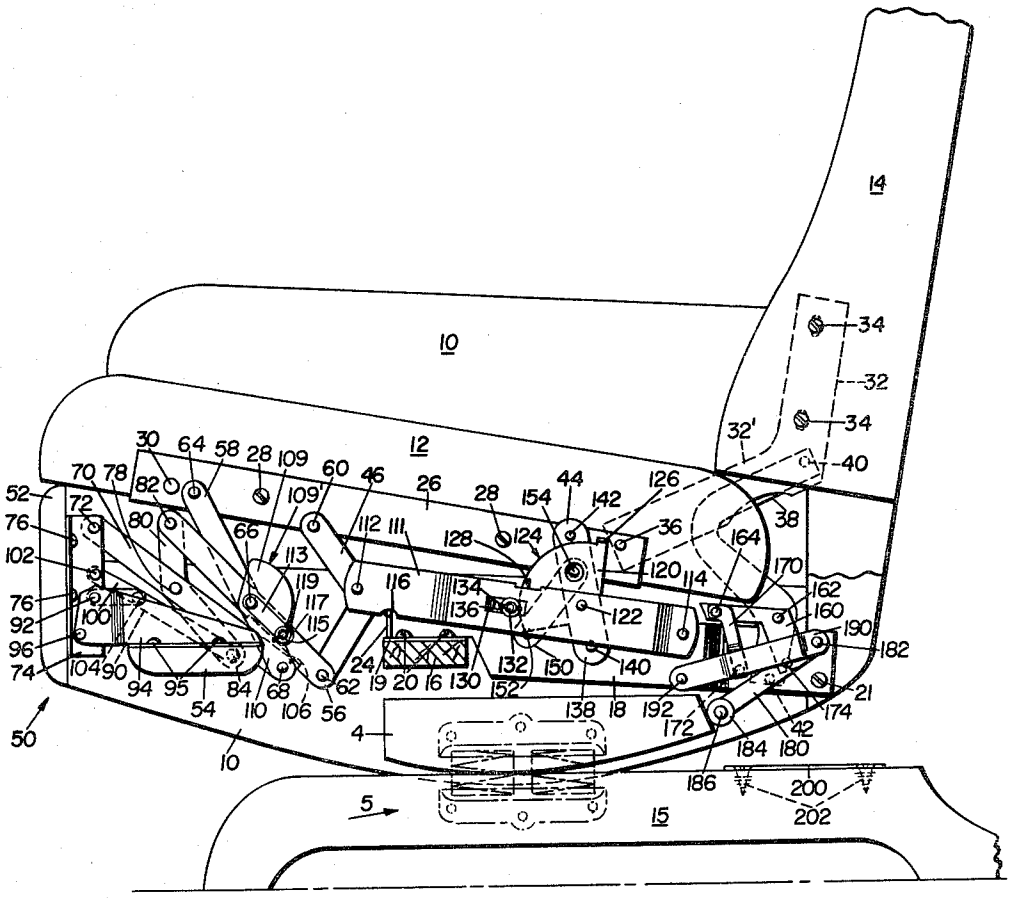

FIG. 1.

INVENTORS.
LEONARD L. MARTIN
FRANK M. RE

BY Kenwood Ross

ATTORNEY.

MECHANISM FOR RECLINER-ROCKER TYPE OF CHAIR

Filed Aug. 19, 1963 4 Sheets-Sheet 2

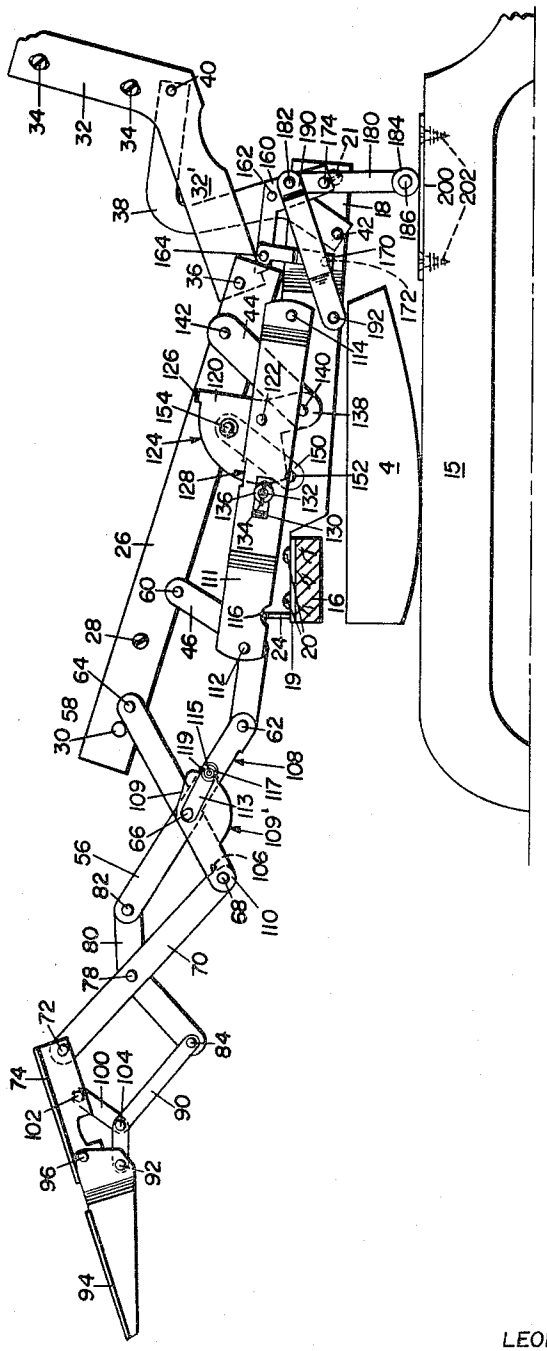

FIG. 2

INVENTORS
LEONARD L. MARTIN
FRANK M. RE
BY Kenwood Ross
ATTORNEY.

MECHANISM FOR RECLINER-ROCKER TYPE OF CHAIR

Filed Aug. 19, 1963 4 Sheets-Sheet 3

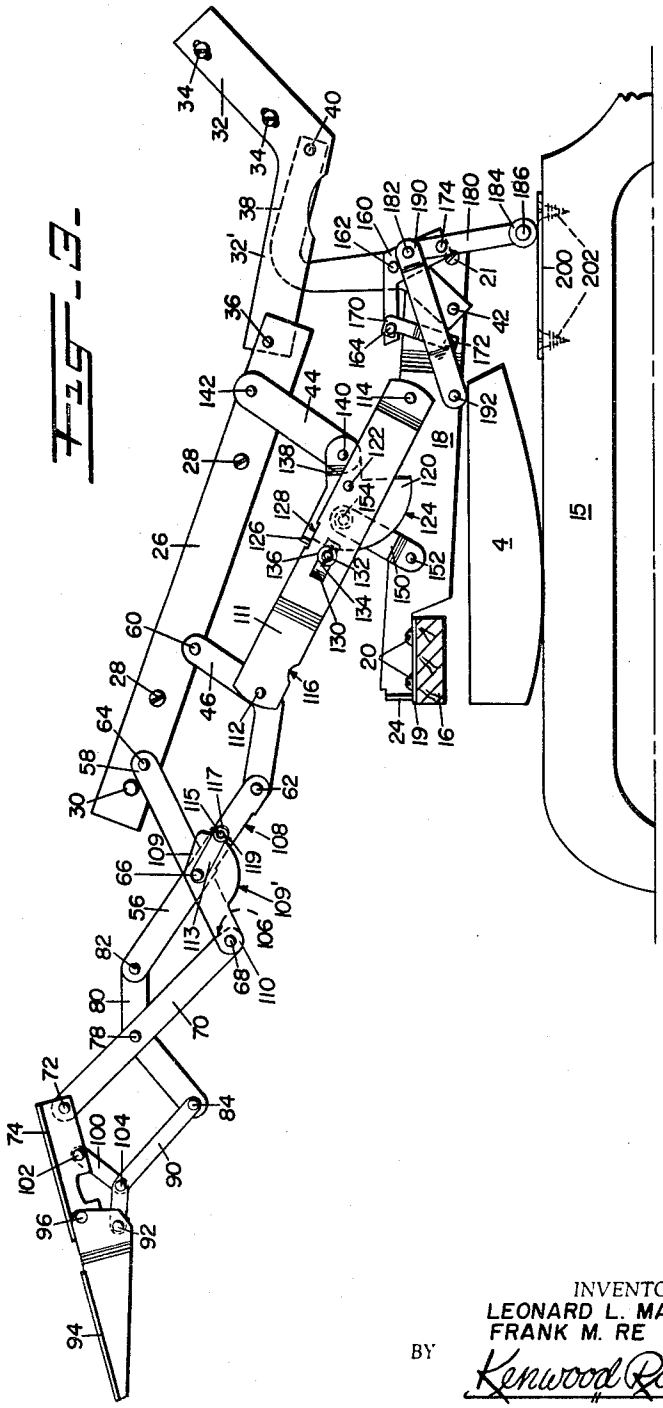

FIG. 3

INVENTORS.
LEONARD L. MARTIN
FRANK M. RE
BY Kenwood Ross
ATTORNEY.

MECHANISM FOR RECLINER-ROCKER TYPE OF CHAIR

Filed Aug. 19, 1963 4 Sheets-Sheet 4

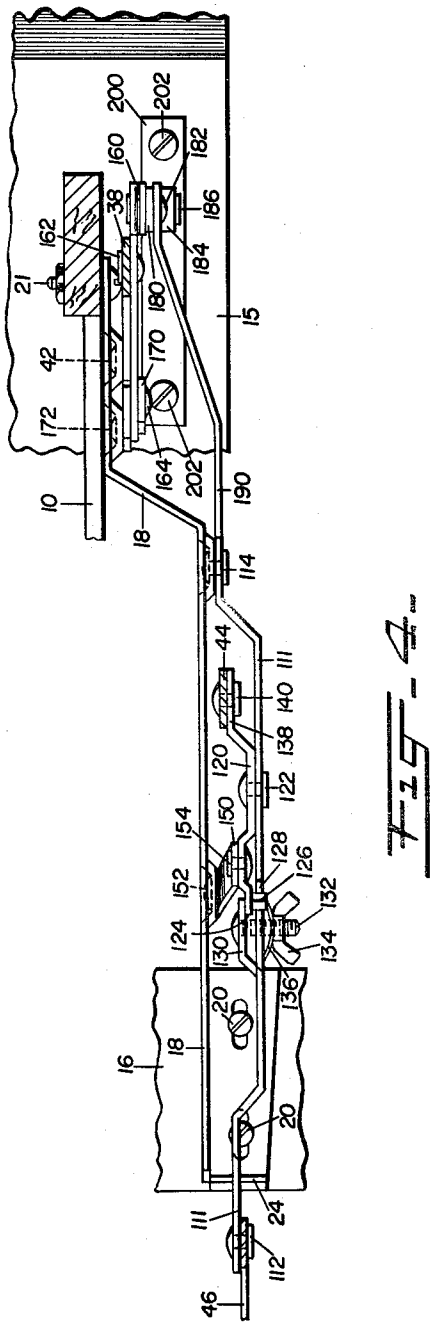

Fig. 4

INVENTORS.
LEONARD L. MARTIN
FRANK M. RE
BY Kenwood Ross
ATTORNEY.

United States Patent Office

3,163,464

Patented Dec. 29, 1964

1

3,163,464
MECHANISM FOR RECLINER-ROCKER TYPE OF CHAIR

Leonard L. Martin, Ludlow, and Frank M. Re, Holyoke, Mass., assignors to Dual Manufacturing and Engineering Incorporated, Holyoke, Mass.

Filed Aug. 19, 1963, Ser. No. 302,962
4 Claims. (Cl. 297—85)

This invention relates to combination rocker-recliner chairs and more particularly to an operating mechanism cooperant with a rocker base and a rockable chassis and seat and back-rest and leg-rest of a chair of the rocker-recliner type.

The concept of the invention envisions a mechanism which is adaptable for interengagement with certain of the above itemized chair components to allow novel articulated movements of certain of the chair components.

The concept further comprehends, as one component of the structure, a fully-articulated, two part, fold-away type of foot stool or leg-rest, and as other related components, a seat and back-rest, each together with the leg-rest, mounted relative to a rockable chassis, which chassis is rockably supported upon a rocker base, with the seat and back-rest and leg-rest being interrelated by a linkage system such as to allow smooth movements of the movable components into and out of various reclining positions.

Additionally, the concept envisions a chassis mounted upon a rocker base so as to be rockable relative thereto, when the chair components are in the upright-sitting position.

In general, a leg-rest unit, as a component of the rocking chair, is supported by a linkage mechanism designed to produce combined motions in translation and rotation to shift the position and attitude of the leg-rest unit between a retracted position, at the front of the chair, and an extended posiiton spaced from and forwardly of the seat and disposed generally in parallelism with or at a preselected angle relative to the main plane of the seat. Means are also provided, cooperatively associated with the aforesaid leg-rest linkage mechanism, for precluding any rocking motion in any preselected reclining position. As a result, the user may employ the chair as a rocker with the leg-rest unit in retracted position, from which position, he may extend the leg-rest unit and recline in the chair to a position established by his and the chair's weight distribution.

It is one of the primary objects hereof to provide a chair of the rockable and reclinable types with cooperant operating mechanism wherewith leg-rest and reclinable seat and back-rest elements are movable coordinately between their respective positions assumed when the chair is in the so-called upright-sitting, leg-rest-retracted, position and when the chair is in the so-called fully-reclined, leg-rest-extended, position and a multiplicity of intermediate reclined positions therebetween.

Another salient object hereof is to provide in an improved chair, a two-part leg-supporting unit constituted by major and minor leg-rest elements which may be moved unitarily between stored, rearwardly-retracted, non-operative positions when the body-supporting sub-assembly constituted by the body-supporting elements, namely the seat and back-rest, has an upright relationship with respect to a rockable chassis, and non-stored, forwardly-extended, operative positions when the body-supporting sub-assembly has a tilted relationship with respect to the rockable chassis, and further novel control and braking devices wherewith smooth coordinated reclining movements are attained, particularly as the chair occupant moves into any position of reclination, with the objectionable sensation of falling, experienced with so many prior art reclining chairs, being obviated.

2

These and other objects will be more apparent from a consideration of the subjoined drawings, wherein:

FIG. 1 is a fragmentary, side elevational view of an embodiment of a rocking/reclining chair of the invention, with the chair being shown in the upright or sitting, leg-rest retracted position, and with the side panel of the supporting frame work of the rockable chassis on the near side of the chair having been removed for purposes of clarity;

FIG. 2 is a side elevational view of the linkage mechanism of the chair shown in FIG. 1, with the mechanism being shown in the intermediate-reclined or "TV" position, and with certain of the chair components having been removed for purposes of clarity;

FIG. 3 is a side elevational view, similar to FIG. 2, with the linkage mechanism being shown in the fully-reclined position;

FIG. 4 is an enlarged, fragmentary, top plan view of the linkage mechanism shown in FIG. 3, with certain portions being omitted for purposes of clarity.

For ease in reference, the chair, as viewed in all of the figures, will be considered with the forward face or front of the chair appearing at the left and the rearward face or rear of the chair appearing at the right, and, for purposes of orientation, "forward" as used herein will be understood to mean toward the left and "rearward' will be understood to mean toward the right.

The chair, constituting the disclosed embodiment of the invention, comprises a rockable chassis **10**, a seat **12**, a separate back-rest **14**, and a rocker base **15**.

At either side of the chair, an arcuate rocker **4** is secured to the respective side wall of the chassis and rockable upon the upper planar surface of the adjacent rail of the rocker base **15**.

Each rocker **4** is interassociated with rocker base **15** by a double compression spring mechanism, generally designated by **5**, in the normal platform-rocker manner.

It will be understood, with reference to seat **12**, that same is constituted by a pair of parallel side rails interjoined at their forwardmost and rearwardmost ends by a forward and rearward cross rail respectively, and which may be further interjoined by intermediate cross rails, all for the improved support of the usual cooperant springs, padding, and covering components.

Likewise, back-rest **14** is constituted by a pair of parallel side rails interjoined by a plurality of strategically-located cross rails, in conventional manner.

Seat **12** and back-rest **14** will be pivotally secured relative to each other and cooperantly will constitute what will be referred to as a body-supporting sub-assembly and same will be understood to have a pivotal relationship to rockable chassis **10**.

A linkage mechanism, now to be described, will be understood to constitute one of a pair, there being one such linkage mechanism at each side of the body-supporting sub-assembly inwardly of the respective adjacent side of the rockable chassis so as to be concealed from view.

The linkage mechanism, as viewed in FIG. 1, is stationarily mounted on a stretcher or cross rail **16** which is extendable transversely relative to and between the inner faces of the opposite side walls of rockable chassis **10**, said stretcher being rigidly secured to said side walls.

A generally horizontally-disposed base bracket **18** extends along the front-to-rear dimension of the chair and is stationarily fixed adjacent its forwardmost extremity by means of an offset web portion **19** to the top planar surface of stretcher **16** as by screws **20** or equivalent, and is secured adjacent its rearwardmost extremity to the adjacent portion of the coplanar-disposed side wall of the rockable chassis **10** as by a screw **21** or equivalent securing means.

Extending upwardly from and integral with the for-

wardmost end face of base bracket **18**, a linkage mechanism stop **24** is strategically provided for limiting the linkage mechanism movement, as will appear.

A seat bracket **26**, also extending in a front-to-rear dimension of the chair, is stationarily secured to the lower edge of the adjacent side rail of seat **12**, as by screws **28**.

A leg-rest stop **30** extends transversely relative to and outwardly from seat bracket **26** near the forward extremity thereof for limiting leg-rest movement, as will hereinafter be made clear. Said leg-rest stop may be secured to said seat bracket by any conventional means so as to be unitary therewith and conceivably may even comprise an offset portion of seat bracket **26**.

A back link **32**, having the general configuration of a boomerang, has an upper arm portion stationarily secured to the adjacent side rail of back-rest **14** as by screws **34**, and a lower forwardly-extending arm portion **32'** pivotally secured near its forward extremity to seat bracket **26** near the rearward extremity thereof as by a pivotal connecting pin **36**, thereby allowing articulated movement of seat **12** and back-rest **14** relative to each other.

Seat **12** and back-rest **14** are pivotally supported for articulated movement relative to rockable chassis **10** by means of a primary pivot link **38** of generally dog-leg or sickle configuration which is pivotally connected near its upper extremity to back link **32** as by a pivotal connecting pin **40** and is pivotally connected near its lower extremity to base bracket **18**, as by a pivotal connecting pin **42**, thus allowing a pivotal relationship between the rockable chassis and the seat and back-rest.

Seat **12** and back-rest **14** are additionally pivotally supported relative to rockable chassis **10** through a secondary pivot link **44** and a tertiary pivot link **46**, more fully to be described hereinafter.

Before proceeding with further recitation of the linkage mechanism, it is to be explained that a two-part, fold-away leg-supporting unit or leg-rest, generally indicated by **50**, is constituted by a major leg-rest element **52** and a minor leg-rest element **54** pivotally interengaged.

Leg-rest **50** is mounted, by means of the linkage mechanism, relative to the forward end of seat **12** for movements between a fully-retracted position, as viewed in FIG. 1, and a fully-extended position, as viewed in FIGS. 2 and 3, and intermediate positions therebetween.

In said fully-retracted position, which is the fully-upright or sitting position of the chair, major leg-rest element **52** will be positioned substantially flush with the forwardly-facing vertical front rail of seat **12**, while the cooperant minor leg-rest element **54** will be positioned so as to extend rearwardly from adjacent the lower end of the major leg-rest element and concealed from view beneath the seat and behind the major leg-rest element.

As will appear, when major leg-rest element **52** is elevated and advanced to any extended position, cooperant minor leg-rest element **54** is moved accordingly therewith, it being pivotally interconnected thereto, as aforesaid. When the major leg-rest element is in fully-extended position, the minor leg-rest element will have moved to a position forwardly of and in axial alignment with the major leg-rest element, as best observed in FIGS. 2 and 3.

Leg-rest **50** is suspended, relative to seat **12**, by means of the aforementioned tertiary pivot link **46** and a pair of actuator links, identified as a primary actuator link **56** and a secondary actuator link **58**.

Tertiary pivot link **46** is pivoted adjacent its uppermost extremity to seat bracket **26** as by a pivotal connecting pin **60** and adjacent its lowermost extremity to primary actuator link **56** adjacent the lowermost rearwardly-facing extremity thereof, as by a pivotal connecting pin **62**.

Secondary actuator link **58** is pivoted, adjacent its upper extremity, to seat bracket **26** as by a pivotal connecting pin **64** disposed forwardly of pivotal connecting pin **60**, is pivoted at its midsection to the midsection of primary actuator link **56** as by a pivotal connecting pin **66**, and is pivoted adjacent its lower extremity to a primary lifter link **70** as by a pivotal connecting pin **68**.

By means of a pivotal connecting pin **72**, primary lifter link **70** is pivoted adjacent its forward extremity to a major leg-rest support plate **74** fixed to and extending rearwardly outwardly from the rearward face of major leg-rest element **52** as by screws **76**.

Primary lifter link **70** is pivoted at its approximate midsection as by a pivotal connecting pin **78** to the approximate midsection of a secondary lifter link **80**.

Secondary lifter link **80** is pivoted adjacent its upper extremity as by a pivotal connecting pin **82** to adjacent the upper extremity of primary actuator link **56** and is pivoted adjacent its lower extremity as by a pivotal connecting pin **84** to adjacent the lower extremity of a primary control link **90**, said primary control link in turn being pivoted adjacent its forward extremity as by a pivotal connecting pin **92** to a minor leg-rest support plate **94** which is fixed to the rearward or inner face of minor leg-rest element **54** as by screws **95**.

Major and minor leg-rest support plates **74** and **94** respectively are articulately interlinked by a pivotal connecting pin **96**, wherewith corresponding articulated movement between the major and minor leg-rest elements is allowed.

A secondary control link **100** is pivoted adjacent one of its ends as by a pivotal connecting pin **102** to major leg-rest support plate **74** and is pivoted adjacent its opposite end as by a pivotal connecting pin **104** to primary control link **90**.

Rearward movement of leg-rest **50**, beyond the retracted position shown in FIG. 1, is precluded by the abutment of an edge of primary lifter link **70** against the adjacent edge of the vertically co-planar primary actuator link **56**, a positive stop action being assured by virtue of the configuration of primary lifter link **70**, its upper edge being flattened as at **106** adjacent the lower extremity of the said link and the configuration of the adjacent lower edge of primary actuator link **56** which is provided with a complemental longitudinally-extending notch **108**. In chair upright position, flat **106** is receivable in notch **108**, wherewith said positive stop action is realized.

A braking device is provided in the form of a leg-rest friction plate **109** which has a lowermost projecting tail portion **110** which is secured relative to secondary actuator link **58** as by the pivotal connecting pins **68** and **66**.

The main body portion of said leg-rest friction plate is provided with an arcuate edge **109'**, for purposes to appear.

A friction link **113** is secured relative to primary actuator link **56** as by pivotal connecting pin **66** and a bolt **115** extendable through said friction link and an aligned opening in said primary actuator link, said bolt having a cooperant spring washer **117** and nut **119** received thereupon.

Therewith, movement of leg-rest **50** in leg-rest extending direction is variably controlled according to the weights of the individual chair occupants.

A rise bar **111** interconnects the previously described leg-rest portion of the linkage mechanism to rockable chassis **10** by means of tertiary pivot link **46** which is pivoted at its midsection to adjacent a forward portion of the rise bar as by a pivotal connecting pin **112**. Said rise bar rotates on a pivotal connecting pin **114** located adjacent the rise bar rearward extremity, by means of which the rise bar is interconnected to base bracket **18** and is rotatable relative thereto.

The lower edge or face of rise bar **111** is provided, adjacent its forward extremity, with a recess **116** adapted to receive mechanism stop **24** in abutting relationship to preclude any downward movement of the rise bar and hence of the entire linkage mechanism beyond a predetermined limit as dictated by the relationship of parts in the chair upright position.

An elevator link 120 is pivoted to rise bar 111 intermediate the length thereof as by a pivotal connecting pin 122 and is provided with an arcuately-configured forwardly and upwardly-facing edge 124, which edge terminates adjacent its rearmost extremity in an offset lip or flange portion 126 which extends radially outwardly beyond and transversely relative to edge 124. Lip portion 126 functions as a stop, when the chair is in fully-reclined position, being engageably received within a notch 128 strategically provided in the upper edge of rise bar 111.

An upset in rise bar 111, adjacent edge 124 of elevator link 120, is so formed as to define an offset friction finger 130. The outer free extremity of friction finger 130 and rise bar 111 are coplanar and define a space therebetween in which is receivable elevator link 120, one planar face of the elevator link being flush with the adjacent inner planar face of the rise bar, and the other planar face thereof being flush with the adjacent inner planar face of the friction finger.

A bolt 132, extendable laterally through a suitable opening in friction finger 130, has a nut 134 threadedly engageable therewith and tightenable against a spring washer 136 sleeved on said bolt in manner to bridge the rise bar opening resultant from the upsetting in forming the friction finger and to be positionable firmly and flush against the rise bar outermost planar face. Being spring-like in nature, washer 136 spring loads the friction finger.

Nut 134, tightened against washer 136, will draw friction finger 130 inwardly in manner to increase frictional engagement between elevator link 120 and rise bar 111. Conversely, nut 134 may be loosened, wherefore frictional engagement between the elevator link and rise bar is decreased.

Nut 134 and washer 136, cooperantly with friction finger 130, constitute an adjustable braking mechanism wherewith the force or weight required to move both seat and back-rest to one of a plurality of reclining positions may be varied, in accordance with the specific desires or requirements of a particular chair occupant.

A lowermost, outwardly-projecting, portion of elevator link 120 defines a tail 138 which may be pivoted adjacent its outer extremity as by a pivotal connecting pin 140 to adjacent the lowermost extremity of secondary pivot link 44. The secondary pivot link in turn is pivoted adjacent its uppermost extremity as by a pivotal connecting pin 142 to seat bracket 26.

A limit link 150, pivoted adjacent its lower extremity as by a pivotal connecting pin 152 to base bracket 18 and pivoted adjacent its upper extremity as by a pivotal connecting pin 154 to elevator link 120, functions to limit angularization of the body-supporting sub-assembly in the fully-reclined position.

Any rocking movement of chassis 10 relative to rocker base 15, while the chair is in the positions of FIGS. 2 or 3 or positions therebetween, is precluded by a linkage system now to be described.

A stop actuating link 160 is pivoted at 162 to primary pivot link 38 adjacent the lower end thereof and at 164 at its forward end to the upper end of a guiding link 170 which is in turn pivoted at its lower end at 172 to base bracket 18.

The lower end of stop actuating link 160 is pivoted at 174 to a roller link 180 adjacent the midsection thereof.

Roller link 180 is pivoted at its upper end at 182 to the rearward end of a cross link 190 which is pivoted at its forward end at 192 to base bracket 18.

Roller link 180 carries a roller 184 on its forward or lower end, said roller being rotatably mounted on an axle 186 extending from said roller link.

In the upright position of the chair, roller 184 is in a retracted position behind rocker 4, wherefore it does not contact rocker base 15 during rocking movements of the rockable chassis 10 relative to said rocker base.

As the body-supporting sub-assembly is reclined, primary pivot link 38 rotates at 42 and simultaneously

moves stop actuating link 160 rearwardly through the pivotal connection 162, whereupon the upper end of roller link 180 is caused to pivot at 182 relative to cross link 190.

Roller link 180 continues to swing, being guided by guiding link 170, until roller 184 contacts the upper surface of rocker base 15 which may conveniently have a bearing plate 200 fixed thereto as by screws 202 or equivalent upon which bearing plate said roller 184 may ride.

Contact of roller 184 with bearing plate 200 on rocker base 15, precludes rocking of the chassis 10 relative to said rocker base when the chair is in the intermediate or fully-reclined positions or positions therebetween.

As the chair is moved between the intermediate reclining position of FIG. 2 and the fully-reclined position of FIG. 3, roller 184 rolls along relative to bearing plate 220, still effectively precluding rocking of the chassis 10.

When the chair is in fully-upright position with leg-rest 50 retracted, major leg-rest element 52 being positioned flush with the forward face of seat 12 and minor leg-rest element 54 being disposed rearwardly, rise bar 111 will be observed to rest on stop 24 with friction finger 130 and bolt 132 being disposed adjacent the lower end of edge 124 of elevator link 120. From this position, it is possible for the chair occupant to move to an intermediate reclined position, by causing a rearwardly-directed component of force to bear upon back-rest 14 in manner to cause the seat and back-rest to move in substantially rearward directions relative to stretcher 16 by the coordinated swinging movements of primary pivot link 38 and secondary pivot link 44 and tertiary pivot link 46, each upon its respective pivotal connecting pin.

In the course of any movement from upright position to a reclined position and with the leg-rest extended, the primary and secondary and tertiary pivot links and the secondary actuator link pivot unisonly (in clockwise direction as viewed in FIG. 1) concomitantly with movement of seat bracket 26 and the body-supporting assemblage.

Rotation of tertiary pivot link 46 urges primary actuator link 56 forwardly and upwardly, so as simultaneously to urge secondary actuator link 58 forwardly and upwardly thereby to cause a corresponding movement of primary lifter link 70, all whereby major leg-rest support plate 74 and major leg-rest element 52 are motivated into the extended generally-horizontally disposed position.

Similarly, rotation of primary actuator link 56 imparts a corresponding rotation to secondary lifter link 80 whereby primary and secondary control links 90 and 100 respectively are moved forwardly and outwardly to urge the minor leg-rest support plate to pivot relative to the major leg-rest support plate.

A smooth swinging motion of minor leg-rest support plate 94 is assured by the constraining action of secondary control link 100 on forward movement of primary control link 90 as it motivates the minor leg-rest support plate into axial alignment with the major leg-rest support plate, all wherewith the major and minor leg-rest elements are disposed in axial alignment as to each other when the chair is in a semi-reclined position, as in FIG. 2, or is in a fully-reclined position, as in FIG. 3.

In such leg-rest extending movement sequence, rise bar 111 has not changed its generally-horizontal position relative to base bracket 18 and continues to rest on stop 24, even though leg-rest 50 is now fully-extended while the forward edge of secondary actuator link 58 abuts stop 30 on seat bracket 26 to preclude further leg-rest extension, and roller 184 on roller link 180 now contacts bearing plate 200 on rocker base 15 to preclude rocking of chassis 10 relative to said rocker base.

The occupant may position the body-supporting sub-assembly at any position of reclination between the positions of FIGS. 1 and 2, with a concomitant partial extension of the leg-rest, ample leg support being provided by major leg-rest element 52.

To reach fully-reclined position from a semi-reclined position, the chair occupant need but once again bring additional rearward pressure to bear upon back-rest 14 as by pushing with the hands upon the arms of the chair, whereupon the forward end of rise bar 111 will be urged upwardly by tertiary pivot link 46 through pivotal connecting pin 112 to cause the rise bar to swing on its pivotal connecting pin 114. During such movement, secondary actuator link 58 will continue to abut stop 30 on seat bracket 26, thereby precluding any further leg-rest extension, and roller 184 will continue to ride on bearing plate 200 precluding rocking of the chassis 10.

As back-rest 14 is further angularized, seat 12 and seat bracket 26 are urged generally upwardly by toe portion 32′ of back link 32 through the pivotal connection 36, and the lower end of tail 138 is pulled upwardly by secondary pivot link 44 through its pivotal connecting pin 140, whereupon elevator link 120 is caused to pivot relative to rise bar 111 on its pivotal connecting pin 122 until flange 126 becomes engaged in rise bar notch 128 to preclude further rotation of elevator link 120.

Friction finger 130 controls the ease of rotation of elevator link 120 upon pivotal connecting pin 122 depending upon the tension set up in the friction finger by the adjustment of nut 134 relative to bolt 132 and washer 136. By this simple adjustment, coupled with the rise of the seat, any objectionable sensation of falling is precluded.

The occupant may return the chair from the fully-reclined to the semi-reclined position, with the leg-rest remaining extended, by exerting a slight downward pressure upon seat 12, or simply by bringing the shoulders away from the back-rest of the chair, causing rise bar 111 to move downwardly into contact with stop 24 and causing secondary pivot link 44 to exert a downward pressure upon tail 138 of elevator link 120 whereupon the elevator link rotates upon its pivotal connecting pin 122 so that the arcuate edge 124 moves upwardly relative to friction finger 130 and bolt 132.

Alternatively, the occupant may return directly to the fully-upright position by exerting a slight downward pressure of the heels upon the leg-rest.

By the novel interconnection between rise bar 111, secondary and tertiary pivot links 44 and 46 respectively, and elevator link 120, the reclining movements of the body-supporting sub-assembly are smooth and effortless and are perfectly controlled and balanced and coordinated.

On returning to the intermediate reclining position of FIG. 2 from the fully-reclined position of FIG. 3, roller 184 moves forwardly along bearing plate 200, roller link 180 having maintained its substantially downwardly extended position, wherefor chassis 10 has maintained a relatively fixed relationship to rocker base 15.

On return from the position of FIG. 2 to the upright or rocking position of FIG. 1, roller 184 is swung upwardly away from rocker base 15 to its retracted position rearwardly of rocker 4, whereupon rocking movement of rockable chassis 10 relative to rocker base 15 once again becomes possible.

While we have shown and described a preferred embodiment of the invention herein, it will be obvious to those skilled in the art to which the invention pertains that certain omissions or changes may be made therein, all without departing from the spirit and scope of the invention.

We claim:

1. In a rocker-recliner chair inclusive of a rocker base and a chassis rockably mounted thereupon and a body-supporting sub-assembly including a back-rest and a seat pivotal relative to each other and to the chassis and with the body-supporting sub-assembly being shiftable between a primary upright sitting position and a multiplicity of secondary reclining positions, the improvement in position-attaining means comprising: a leg-supporting means, a linkage system for supporting the body-supporting sub-assembly in its shifting movements and for mounting said leg-supporting means relative to the body-supporting sub-assembly and for moving said leg-supporting means between retracted position adjacent the seat of the body-supporting sub-assembly and projected position forwardly thereof and distantly therefrom coordinately with the shifting movements of the body-supporting sub-assembly and including a rise bar pivotally interconnecting said leg-supporting means and the chassis and an elevator link pivotally interconnected to said rise bar and a stop means carried by said elevator link and rise bar and brake means carried by said rise bar for frictionally interengaging said elevator link and rise bar, said brake means cooperating with said elevator link and rise bar and stop means for effecting control of the shifting movements of the body-supporting sub-assembly, and means cooperant with said linkage system and including a roller link responsive to movement of said linkage system and a roller carried by said roller link and rollable into bearing contact upon the rocker base as the body-supporting sub-assembly is shifted relative to the chassis for effecting preclusion of the rocking of the chassis in any secondary position of the body-supporting sub-assembly.

2. In a combination rocker-recliner chair including a rocker base and a chassis rockably mounted on the rocker base and a body-supporting sub-assembly including a back-rest and a seat pivotal relative to each other and to the chassis, the improvement in means for mounting the body-supporting sub-assembly for movement between a sitting position and an intermediate reclined position and a fully reclined position and positions therebetween comprising: a leg-rest, a system of linkage for moving said leg-rest between a stored position adjacent the seat of the sub-assembly and a position forwardly thereof in coordination with the reclining movement of the body-supporting sub-assembly and including: a rise bar pivotally interlinking said leg-rest and the chassis, an elevator link pivotally connected to said rise bar, stop means, and adjustable brake means integral with said rise bar for frictionally interengaging said elevator link and rise bar, said brake means in connection with said elevator link being adapted to control the ease and range and rate of reclining movement of the body-supporting sub-assembly, and means cooperant and operable in concert with said system of linkage and including a roller carried by a roller link pivotally interconnected with said system of linkage and with the roller of said means being movable into a relationship of bearing contact upon the rocker base as the body-supporting sub-assembly is moved relative to the chassis for precluding the rocking of the chassis with respect to the rocker base in any of the reclined positions of the body-supporting sub-assembly.

3. In a platform rocker type of chair, the combination including: a rocker base, a chassis rockably supported upwardly of said rocker base, a body-supporting sub-assembly including a back-rest and seat pivotally mounted for tilting movement relative to each other and to said chassis, a leg-rest, a system of interconnected links supported on said chassis and pivotally supporting the seat and back-rest of said body-supporting sub-assembly and said leg-rest for moving said leg-rest between a retracted position adjacent said body-supporting sub-assembly and projected positions forwardly of said body-supporting sub-assembly, and roller means constituted by a roller link pivotally interconnected to and cooperant with said system of links and operable in concert therewith and a roller rotatably mounted upon said roller link for rolling into bearing relationship upon said rocker base and locking said chassis against rocking relative to said rocker base when said body-supporting unit is tilted relative to said chassis.

4. In a rocker-recliner chair the combination of, a rocker base, a chassis mounted on and rockable relative to said rocker base, a body-supporting sub-assembly including a seat and a back-rest pivotal relative to each other, a leg-rest, a linkage system of interconnected links

for mounting said body-supporting sub-assembly for shifting movements of the seat and back-rest between upright sitting position and reclined position and intermediate reclined positions therebetween relative to said chassis and rocker base and for moving said leg-rest between stored position adjacent the seat of said body-supporting sub-assembly and projected position forwardly of the seat coordinately with shifting movements of said body-supporting sub-assembly and including: a rise bar pivotally interlinking said leg-rest and said chassis, an elevator link pivotally connected to said rise bar, brake means integral with said rise bar and frictionally engageable with said elevator link; said brake means cooperantly with said elevator link constituting a means for controlling movements of said body-supporting sub-assembly relative to said chassis, and roller means operable in concert with said linkage system for precluding rocking of said chassis in other than the upright sitting position of said body-supporting sub-assembly and constituted by a roller link movable responsively to movement of said linkage system and a roller rotatably mounted thereon, the roller of said

roller means being movable into contacting relationship upon said rocker base responsive to movement of said linkage system as said body-supporting sub-assembly is moved relative to said chassis and out of upright sitting position.

References Cited by the Examiner

UNITED STATES PATENTS

Re. 11,906	4/01	Harmon	297—291 X
1,688,576	10/28	Doyle	297—75
2,698,649	1/55	Hopkes	297—269
2,746,519	5/56	Krikorian	297—269
2,838,093	6/58	Bank et al.	297—75
2,951,528	9/60	Maurer	297—266
3,065,828	11/62	Caldemeyer	297—269 X
3,069,201	12/62	Belisle et al.	297—85
3,075,810	1/63	Kitsopoulds	297—270
3,114,573	12/63	Mizelle	297—75

FRANK B. SHERRY, *Primary Examiner.*