March 29, 1938. R. POOLE 2,112,743

HEAT TRANSMITTING ELEMENT

Filed Aug. 4, 1934

Fig. 1.

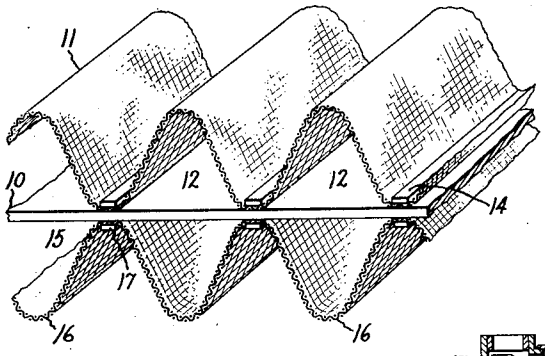

Fig. 2.

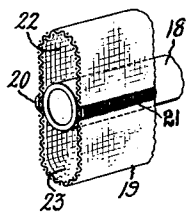

Fig. 3.

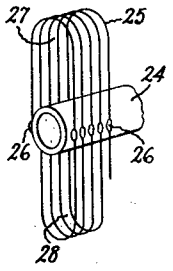

Fig. 4.

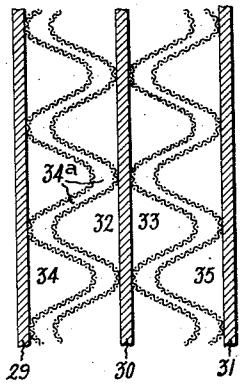

Fig. 5.

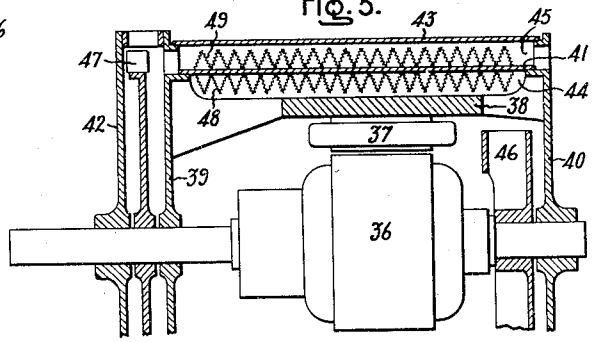

Fig. 6.

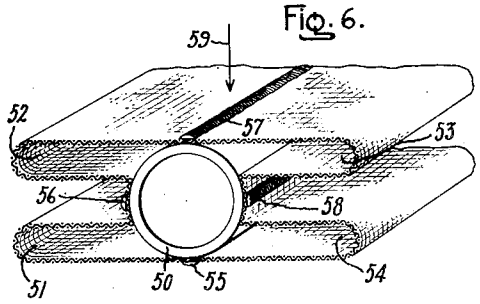

Fig. 7.

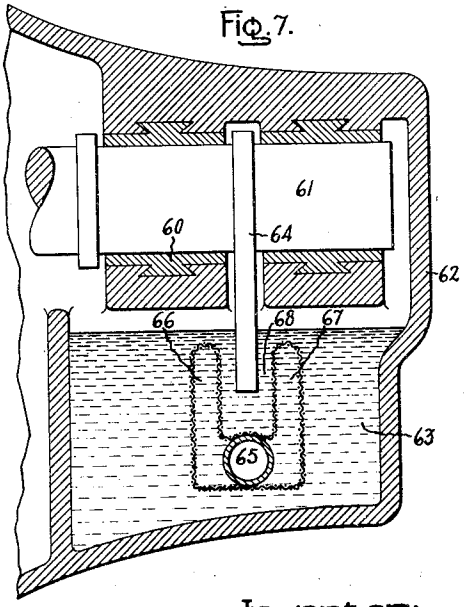

Fig. 8.

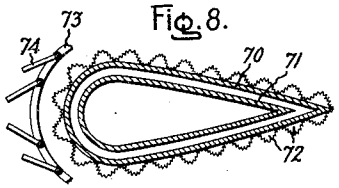

Inventor:
Ralph Poole,
by Harry E. Dunham
His Attorney.

Patented Mar. 29, 1938 2,112,743

UNITED STATES PATENT OFFICE

2,112,743

HEAT TRANSMITTING ELEMENT

Ralph Poole, Bredbury, England, assignor to General Electric Company, a corporation of New York

Application August 4, 1934, Serial No. 738,520
In Great Britain August 15, 1933

2 Claims. (Cl. 257—263)

This invention relates to heat-transmitting elements for effecting interchange of heat between fluids in radiators, coolers, heaters, condensers and like surface heat-exchange apparatus.

The invention has for an object to provide an improved and economical construction of heat-transmitting elements offering relatively large contact surfaces.

In the improved construction according to the present invention a heat-transmitting element for effecting the interchange of heat between fluids in radiators, coolers, heaters, condensers and like surface heat-exchange apparatus comprises a plate-like metal member, herein referred to as the foundation member, and at least one but preferably a plurality of perforated or openwork or gauze members of good heat-conducting material such as copper or steel, which member has a general surface which is bowed away from the surface of the foundation member and has its bowed edges secured to said foundation member in good heat-conducting relationship therewith as by welding, soldering, or the like, so as to form an openwork or perforated hollow gill for the foundation member. In use, the apertures or perforations in the hollow gill will give rise to eddies or cross-jets in the fluid coming into contact with the fundation member on the side thereof at which the gill is disposed. Moreover, particularly where gauze is employed for the construction of the gills, the very extensive heat-conducting surface presented to fluid by the interwoven fibres or strands of the gauze ensures more efficient heat transfer through the element.

For a better understanding of what I believe to be novel and my invention, attention is directed to the following description and the claims appended thereto in connection with the accompanying drawing.

In the drawing, Figs. 1, 2, 3, and 6 illustrate different constructions of heat-transmitting elements in accordance with my invention, and Figs. 4, 5, 7, and 8 illustrate different forms of surface heat-exchange apparatus employing heat-transmitting elements in accordance with my invention.

The arrangement of Fig. 1 comprises a metal plate **10**, hereafter referred to as the foundation plate, and a corrugated openwork or gauze sheet **11** of good heat-conducting material such as copper or steel. The corrugated sheet **11** is secured in good heat-conducting relationship with the plate **10** by means of fused metal along the troughs of the corrugations so as to form a series of hollow gills **12** for the foundation plate **10**. Preferably the gauze employed is of the type having multitudinous fibres or strands interwoven in relatively fine mesh. The connection of the corrugated sheet **11** with the foundation plate **10** is improved in the present arrangement by the provision of stiffening ribs **14** along the troughs of the corrugations, which ribs are secured to said troughs and the foundation plate by welding. In the form shown the plate **10** is also provided on the opposing surface with similar hollow gills **15** formed by a corrugated openwork or gauze sheet **16** secured to the plate **10** along the troughs of the corrugation by means of stiffening ribs **17** and fused metal such as welds. As will be evident, instead of employing a single sheet which is corrugated to form the hollow gills, the same effect is obtained by the provision of a plurality of separate smaller sheets or strips, each of which is bowed to the shape assumed by an individual corrugation and which members are disposed in parallel rows on the foundation plate and individually secured to the plate along their bowed edges.

In the form illustrated in perspective in Fig. 2, the heat-transmitting element comprises a metal tube **18** and a tubular envelope **19** of openwork or gauze made of copper or other good heat-conducting material. The openwork or gauze envelope is substantially elliptical in cross section and embraces the tube **18** as shown and is secured in good heat-conducting relationship therewith at opposite ends of a diameter of the tube by means of welds **20** and **21**, extending longitudinally of the tube. The portions of the gauze intermediate the welding seams are spaced away from the surface of the tube **18** to form hollow gills **22** and **23**. The envelope **19** may be formed from a single sheet of gauze material bent to the desired shape.

In the form illustrated in perspective in Fig. 3, which is a modification of the tubular type of heat-transmitting element illustrated in Fig. 2, the element comprises a metal tube **24** and a spiral **25** of copper or other good heat-conducting materail in strip or ribbon form, which spiral embraces the tube **24**. The individual turns of the spiral **25** are elliptical and are secured to the tube **24** at diametrically opposite points by welds **26**. The line of the welds extends longitudinally of the tube. Intermediate the parts at which the spiral is secured to the tube **24** it is spaced away from the surface of the tube so that the tube is in effect provided with two openwork sheets forming hollow gills **27** and **28** corresponding to the gills **22** and **23** in Fig. 2.

Referring now to the arrangement of Fig. 4,

showing diagrammatically a section through a surface heat-exchange apparatus which may be included in a fluid circulating system for effecting the interchange of heat between fluids, said apparatus comprises three heat-transmitting elements 29, 30 and 31 disposed in parallel spaced relationship. These elements are constructed as illustrated in and described with reference to Fig. 1. The intermediately disposed element 30 is provided with hollow gills 32 and 33 on both sides, whereas the elements 29 and 31 are provided with hollow gills 34 and 35 respectively on one side only. The space between the foundation plates of the elements 29 and 30 forms a duct for one of the circulating fluids and the space between the foundation plates of the elements 30 and 31 forms a duct for the circulation of the other fluid. Said fluids may be circulated either in the longitudinal direction of the hollow gills or transversely thereto. The sheets of openwork or gauze forming the gills 34 and 32 respectively are spaced apart to form intervening spaces 34*a*.

Referring now to Fig. 5, which is a sectional view of a totally enclosed dynamo electric machine provided with a cooling system in accordance with my invention, said machine has a rotor 36 and a stator 37 with a yoke 38. The machine has an inner casing defined by end walls 39 and 40 and a cylindrical wall 41 secured at its end to said end walls, and the machine has an outer casing defined by a plate 42 spaced from the end plate 39 and another circulation wall 43 encircling in spaced relation the aforementioned wall 41. As will be readily seen from the drawing, the yoke 38 and the walls 41 and 43 form two concentric channels or ducts or passages, a channel 44 communicating at its ends with the interior of the machine and a channel 45 communicating at both ends with the atmosphere. A fan 46 secured to the rotor shaft serves for circulating air or like medium through the channel 44 and another fan 47 secured to the rotor shaft and disposed between the walls 39 and 42 serves for circulating air or like medium through the channel 45. The transmission of heat from the medium in the channel 44 to the medium in the channel 45 is considerably improved by the provision of corrugated sheets of gauze 48 and 49 secured to opposite sides of the cylindrical member 41, which member corresponds to the foundation plate 10 of Fig. 1. Said sheets of openwork or gauze are secured to the cylindrical member 41 by means of fused metal. The openwork or gauze sheet 48 forming the hollow gills disposed in the channel 44 through which the enclosed air or medium is circulated is preferably dipped, coated or sprayed in viscous liquid, such as oil, whereby said sheets may serve the additional purpose of freeing the circulating enclosed stream from dust particles generated during prolonged operation of the machine.

In Fig. 6, I have shown a perspective view of another constructional form of heat-transmitting element according to my invention. In this form the metal tube 50 is provided with a plurality of hollow gills 51, 52, 53, and 54 extending in the direction of one diameter. The enclosing walls of each gill are of gauze or like openwork sheet of good heat-conducting material such as copper. The several gills may be formed from a single openwork or gauze sheet which is bent to the proper shape and welded to the tube 50 at opposite ends of two diameters of the tubes. In the present instance the sheet is secured to the tubes by four welds 55, 56, 57, and 58. The welding seams extend along the tube throughout the whole width of the sheet. By the adoption of this constructional form, an advantageous arrangement of the elements to constitute a cooler becomes available in that a number of such heat-transmitting elements may be assembled fairly closely to one another with the mesial planes of the hollow gills lying in substantially parallel planes transverse to the direction of flow of one of the fluids indicated by an arrow 59. It will be appreciated that the other fluid or fluids flow through the tube or tubes 50.

Referring now to Fig. 7, which illustrates diagrammatically an adaptation of heat-transmitting elements according to the invention in the construction of a cooler for oil ring journal bearings, the bearing comprises a liner 60 for supporting a shaft 61 and secured to a casing 62 which latter forms a container 63 for oil or like lubricant. Lubricant is conducted to the bearing surface by a lubricating ring 64 held on the shaft and projecting into the container 63. A tube 65, through which a cooling medium is conducted, is disposed in the container 63. This tube 65 according to my invention is provided with perforated or openwork hollow gills 66 and 67 disposed on opposite sides of the vertical diameter of the tube 65. These gills may be formed, as described above, by securing individual bowed members of gauze or openwork sheets to the tube. In this case, however, the bowed members are deformed to the shape shown in the drawing so that the gills 66 and 67 form a trough or gutter 68. The tube 65 and the gills 66 and 67 are entirely immersed in the lubricant and the arrangement is preferably such that the oil lubricating ring 64 projects into the space of the gutter 68. During operation, oil discharged from the ends of the bearing flows through the gills, where it is cooled, into the gutter 68. The movement of the lubricating ring 64 assists the cooling effect in that the ring effects continued motion of the lubricant within the gutter 68.

In Fig. 8, I have shown an adaptation of heat-transmitting elements in accordance with the invention in the construction of radiators for cooling the engine or working fluid in aircraft or other vehicles. In the present instance the radiator is formed by a wing of an airplane. It comprises an outer shell 70 and an inner shell 71 between which fluid to be cooled, for instance water from the cooling jacket of a combustion engine, is caused to pass. The outer and inner shells 70 and 71 respectively are constructed with an air foil section and the outer section is provided on its external surface with a plurality of hollow gills 72 formed as illustrated in and described with reference to Fig. 1 and disposed with their mesial planes extending substantially at right angles to the line of air foil section. In the present instance I have also provided a shield 73 in front of the radiator, that is in the direction of airplane travel. The shield has a number of hinged flaps 74 for controlling the amount of cooling air at different relative air speeds.

Having described the method of operation of my invention, together with the apparatus which I now consider to represent the best embodiments thereof, I desire to have it understood that the apparatus shown is only illustrative and that the invention may be carried out by other means.

What I claim as new and desire to secure by Letters Patent of the United States is:

1. A heat-transmitting element for effecting the interchange of heat between fluids in radiators, coolers, heaters, boilers, condensers and the like surface heat-exchange apparatus comprising a plate member, gauze sheets of good heat-conducting material corrugated to form troughs on each side of the plate member, and means including reinforcing ribs uniting the troughs with the plate member, the gauze sheets on opposite sides of the plate member being symmetrically arranged so that the troughs and reinforcing ribs contact portions of the plate member directly opposite each other and thereby effect good heat-transmission from one side of the plate member to the other side thereof.

2. A heat-transmitting element for effecting the interchange of heat between fluids in radiators, coolers, heaters, boilers, condensers and the like surface heat-exchange apparatus comprising two parallel-arranged plate members, corrugated gauze sheets secured to the surfaces of the plate members facing each other and arranged to form troughs and gills with the gills of the gauze sheet on one plate member projecting into the troughs of the gauze sheet on the other plate member.

RALPH POOLE.