US00D963590S

(12) **United States Design Patent** (10) **Patent No.: US D963,590 S**
Kanno (45) **Date of Patent: ** Sep. 13, 2022**

(54) **CONNECTOR**

(71) Applicant: **Japan Aviation Electronics Industry, Limited**, Tokyo (JP)

(72) Inventor: **Hideyuki Kanno**, Tokyo (JP)

(73) Assignee: **JAPAN AVIATION ELECTRONICS INDUSTRY, LIMITED**, Tokyo (JP)

(**) Term: **15 Years**

(21) Appl. No.: **29/772,049**

(22) Filed: **Feb. 26, 2021**

(30) **Foreign Application Priority Data**

Oct. 28, 2020 (JP) ..... 2020-023252 D

(51) **LOC (13) Cl.** **13-03**

(52) **U.S. Cl.**
USPC **D13/147**

(58) **Field of Classification Search**
USPC D13/146, 147, 123, 133, 154, D13/137.1–139.8, 110, 159, 184, 199
CPC H01R 24/28; H01R 13/432; H01R 27/02; H01R 13/514; H01R 13/64; H01R 13/115; H01R 13/506; H01R 13/648; H01R 13/62; H01R 13/04; H01R 13/6273; H01L 23/32; H01L 2924/0002; H01L 2924/00
See application file for complete search history.

(56) **References Cited**

U.S. PATENT DOCUMENTS

D493,423	S *	7/2004	Kubota	D13/133
D493,424	S *	7/2004	Kubota	D13/133
D494,931	S *	8/2004	Kubota	D13/133
D512,375	S *	12/2005	Kubota	D13/125
D896,183	S *	9/2020	Musser	D13/147
2015/0249301	A1 *	9/2015	Yu	H01R 24/28 439/345

FOREIGN PATENT DOCUMENTS

CN	306785890	* 8/2021
CN	306794412	* 8/2021
CN	306892827	* 10/2021
CN	307107501	* 2/2022

* cited by examiner

Primary Examiner — Bridget L Eland
(74) *Attorney, Agent, or Firm* — Manabu Kanesaka

(57) **CLAIM**

The ornamental design for a connector, as shown and described.

DESCRIPTION

FIG. **1** is a front elevational view of a connector showing my new design;
FIG. **2** is a rear elevational view thereof;
FIG. **3** is a right side elevational view thereof;
FIG. **4** is a left side elevational view thereof;
FIG. **5** is a top plan view thereof;
FIG. **6** is a bottom plan view thereof;
FIG. **7** is a perspective view showing a front, top and right side thereof;
FIG. **8** is a perspective view showing a rear, bottom and left side thereof;
FIG. **9** is a perspective view showing a front, right and bottom side thereof; and,
FIG. **10** is a perspective view showing a rear, left and top side thereof.
The broken line showing of the connector is for the purpose of illustrating portions of the article and forms no part of the claimed design.

1 Claim, 5 Drawing Sheets

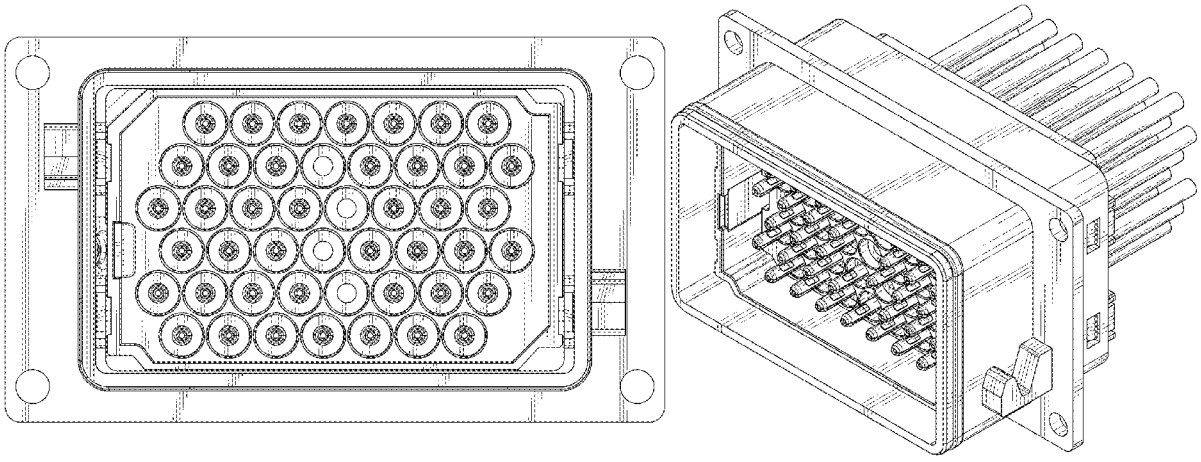

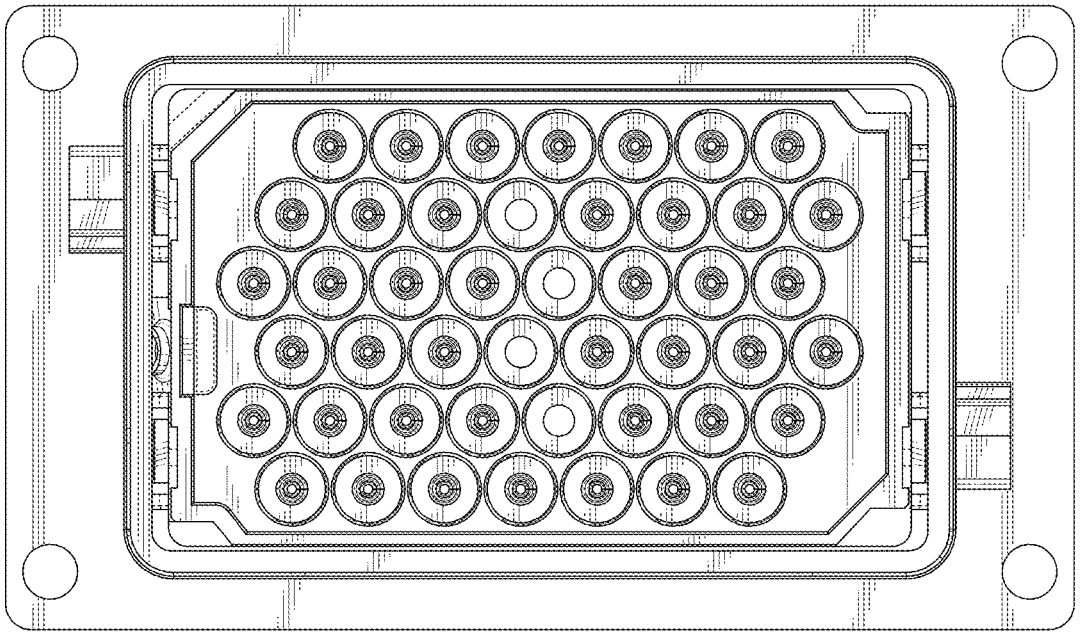

FIG. 1

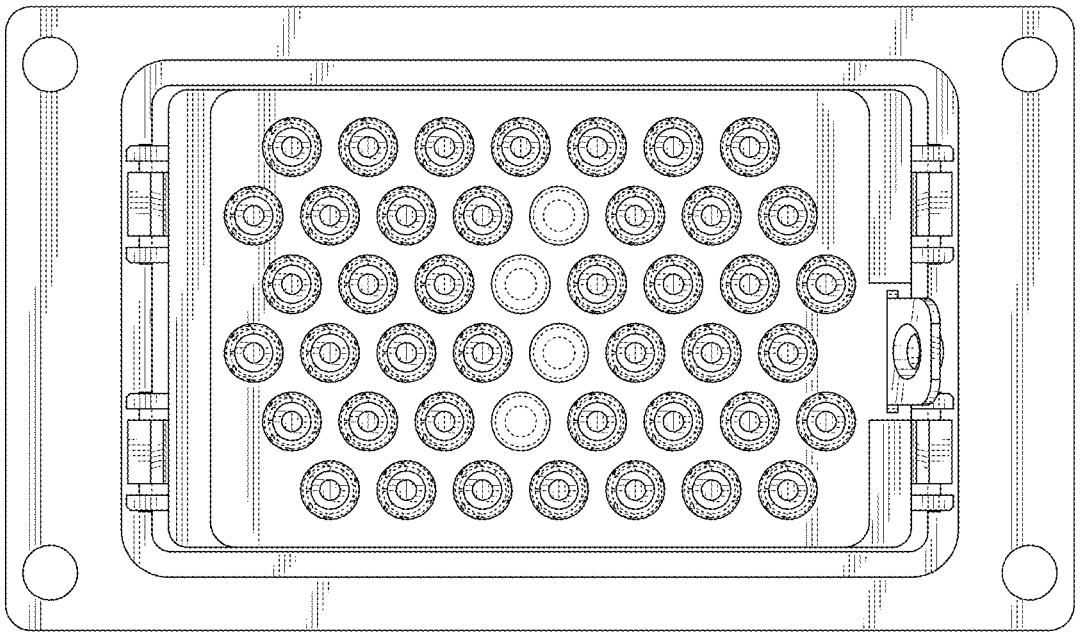

FIG. 2

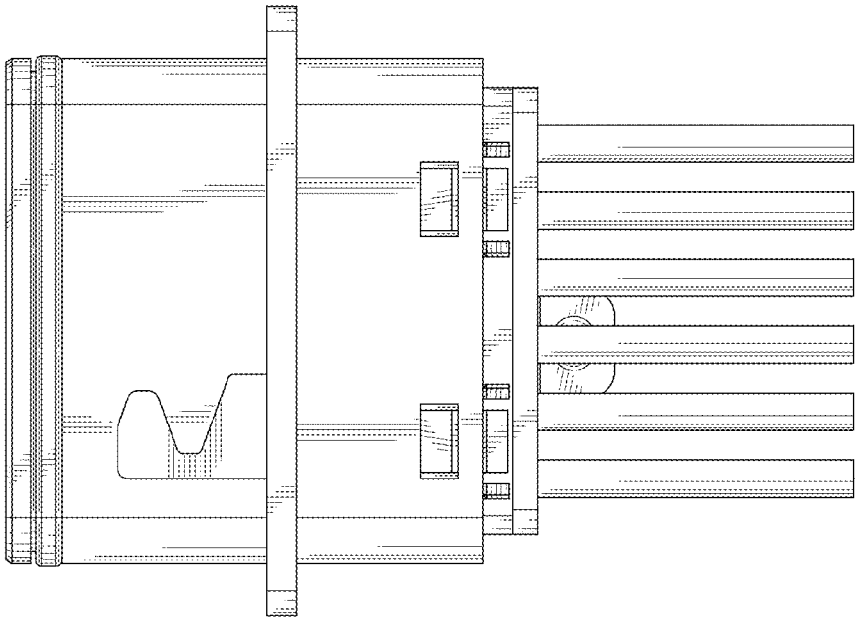

FIG. 3

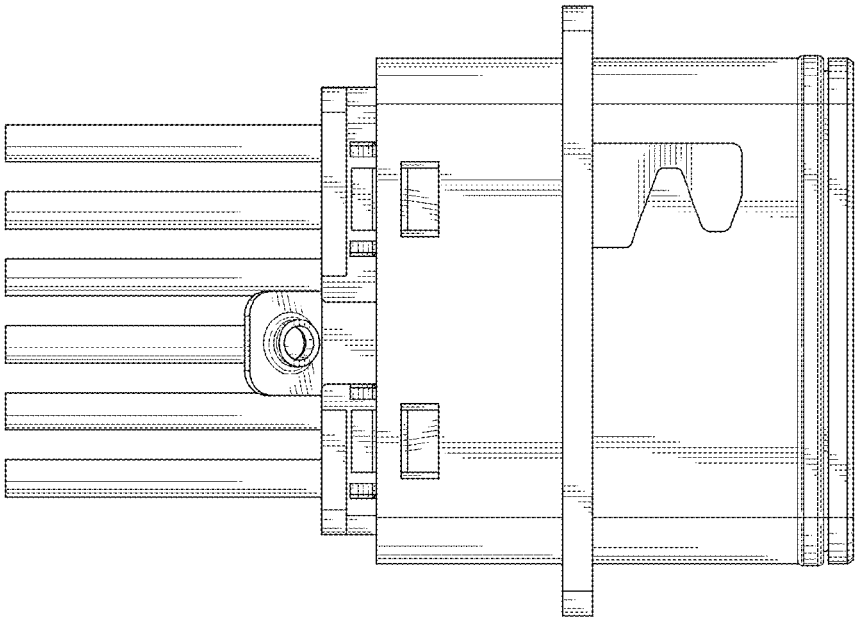

FIG. 4

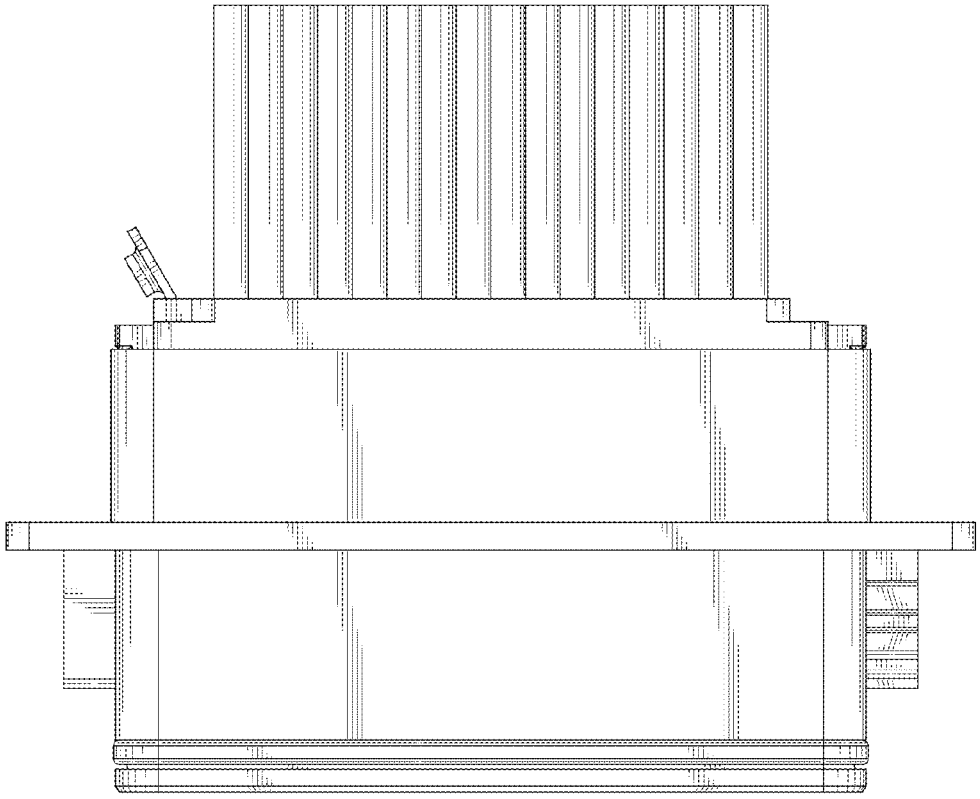

FIG. 5

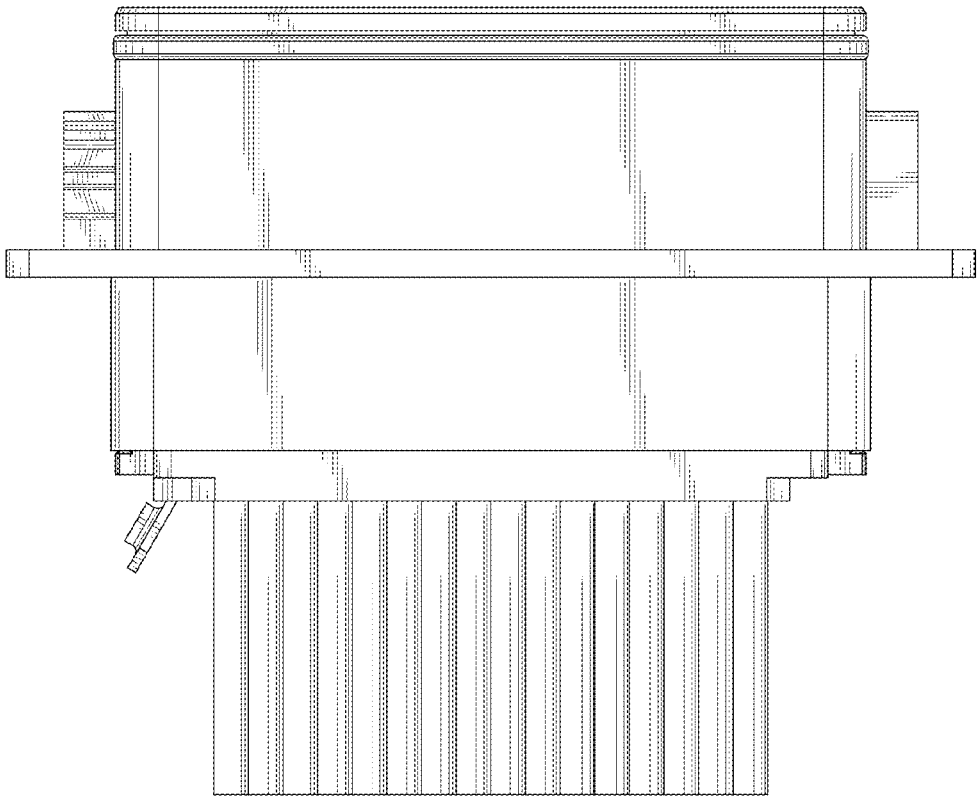

FIG. 6

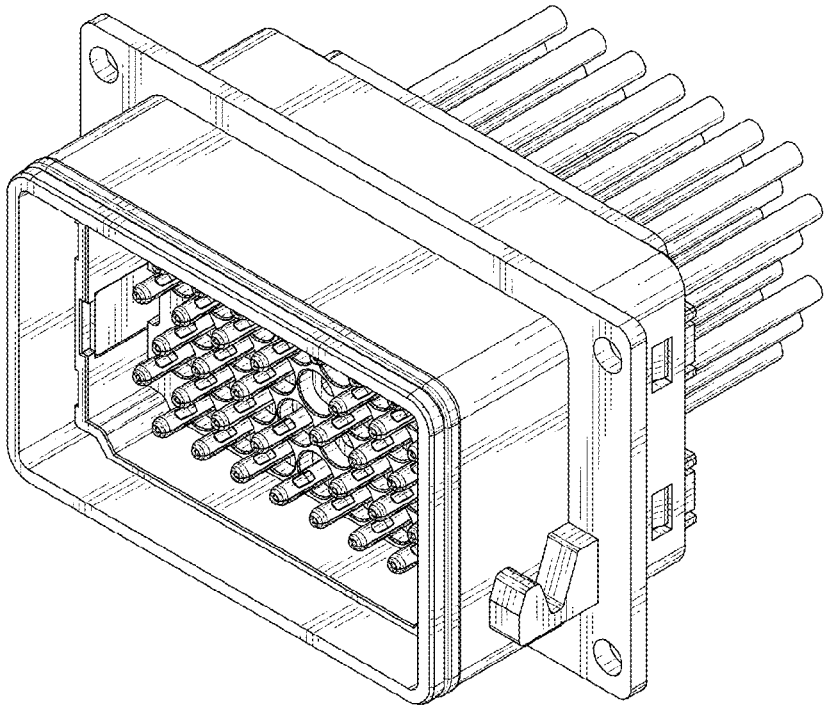

FIG. 7

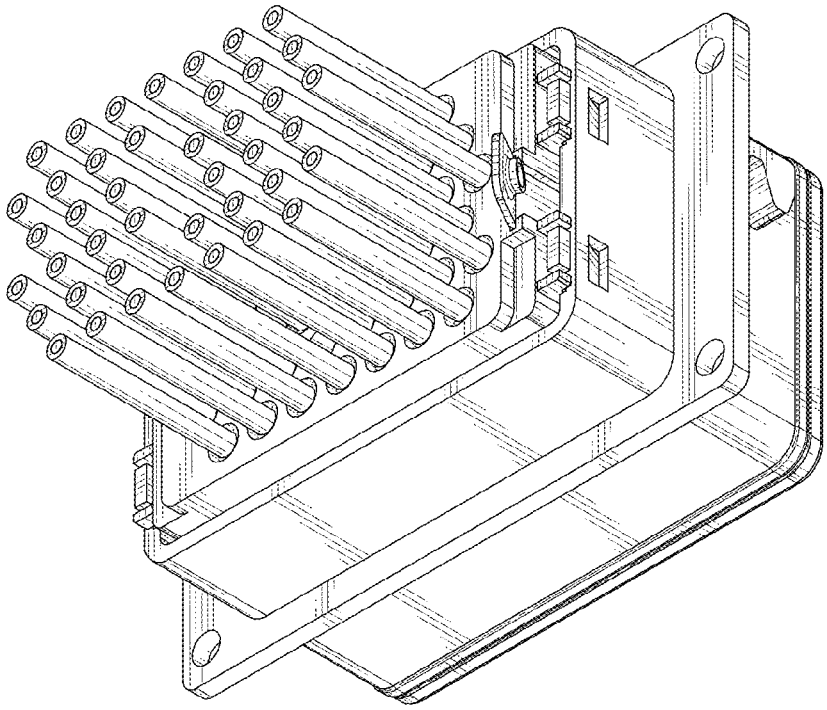

FIG. 8

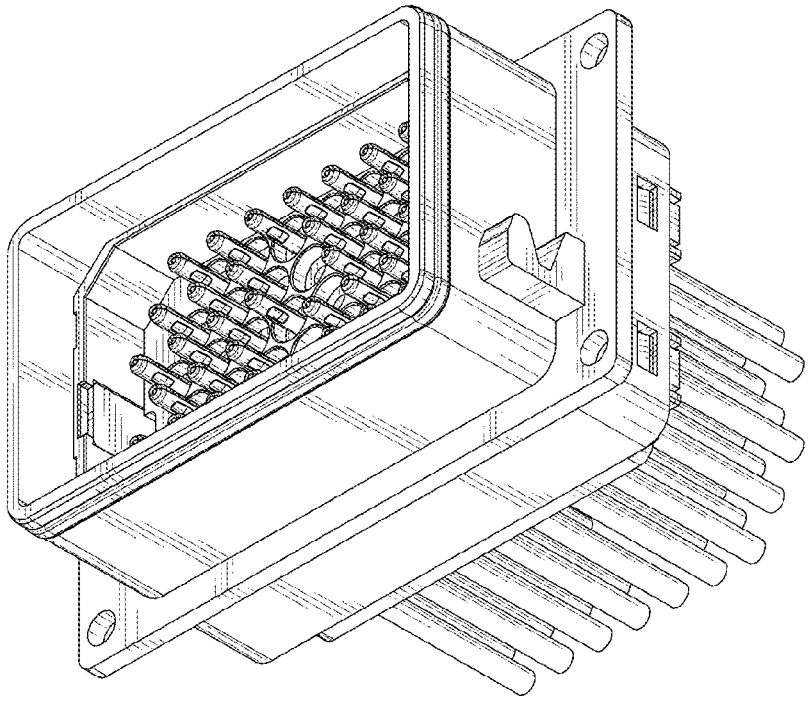

FIG. 9

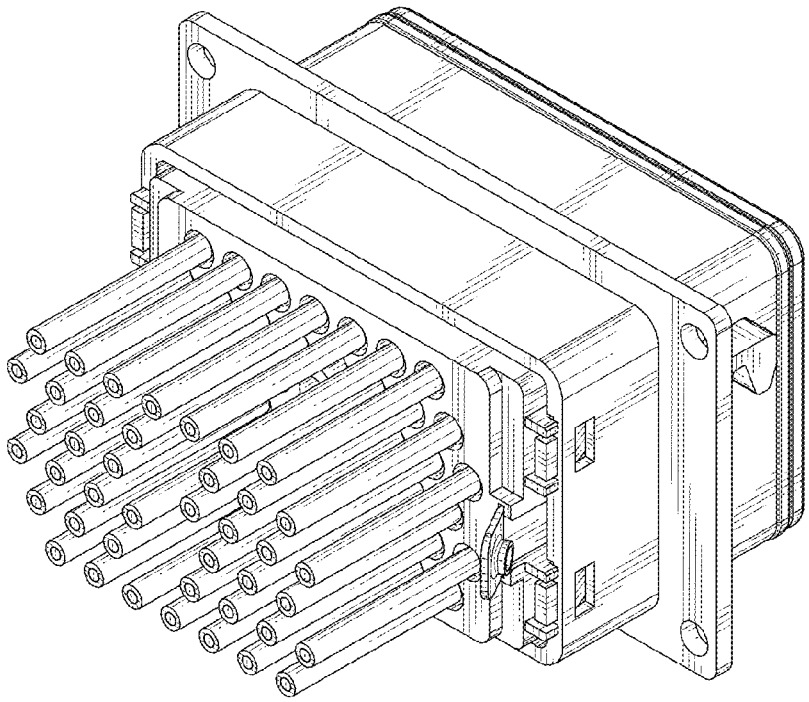

FIG. 10