US 20080264964A1

(19) United States

(12) Patent Application Publication

Kaiser et al.

(10) Pub. No.: US 2008/0264964 A1

(43) Pub. Date: Oct. 30, 2008

(54) SERIALLY CONNECTED PACKETS WITH GRASPING PORTION

(75) Inventors: **Kristen J. Kaiser**, Chicago, IL (US); **Christina M. Palazzolo**, Chicago, IL (US)

Correspondence Address:
FRANCIS C. KOWALIK
WALGREEN CO. LAW DEPARTMENT
104 WILMOT ROAD, M.S. #1425
DEERFIELD, IL 60015 (US)

(73) Assignee: **WALGREEN CO.**, Deerfield, IL (US)

(21) Appl. No.: **11/741,539**

(22) Filed: **Apr. 27, 2007**

Publication Classification

(51) **Int. Cl.**
B65H 3/58 (2006.01)

(52) **U.S. Cl.** **221/26**

(57) **ABSTRACT**

A dispensing assembly includes a container and a strip. The container has an interior and an opening. The strip has a first end and a second end, and a portion of the strip is disposed in the interior of the container. The strip includes a plurality of packets connected in a series, and the plurality of packets include at least one filled packet that is filled with a medication. The plurality of packets includes an empty first packet at the first end. The strip extends at least in part through the opening of the container such that at least a portion of the first packet is disposed outside of the container to aid a user in grasping the strip.

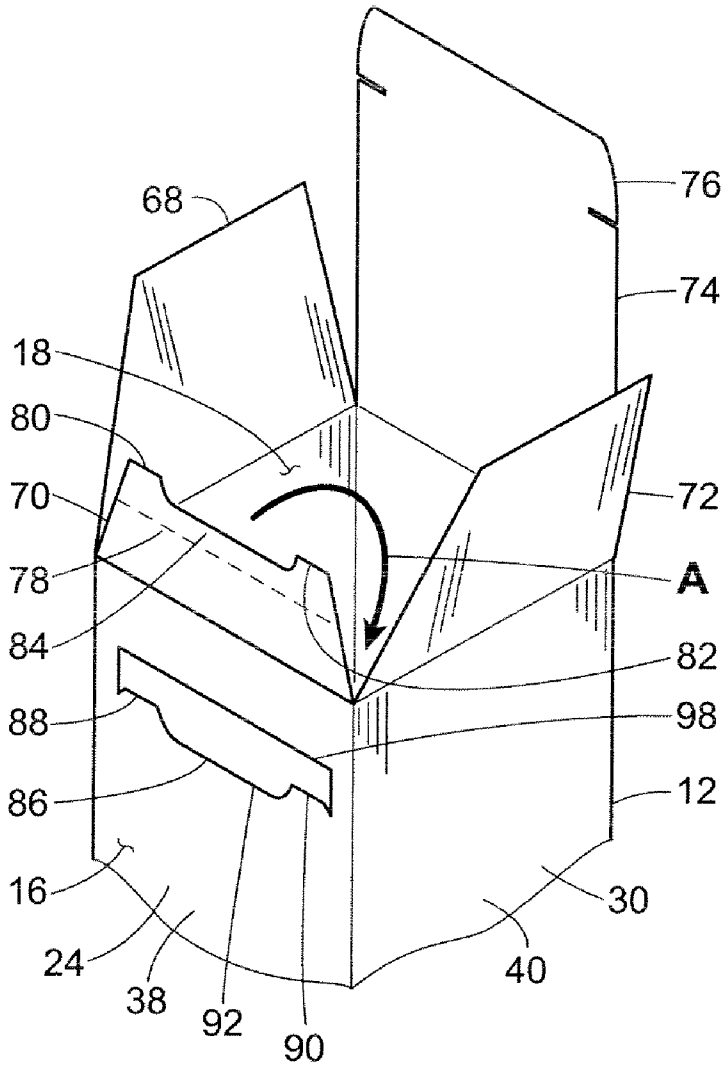

FIG. 1

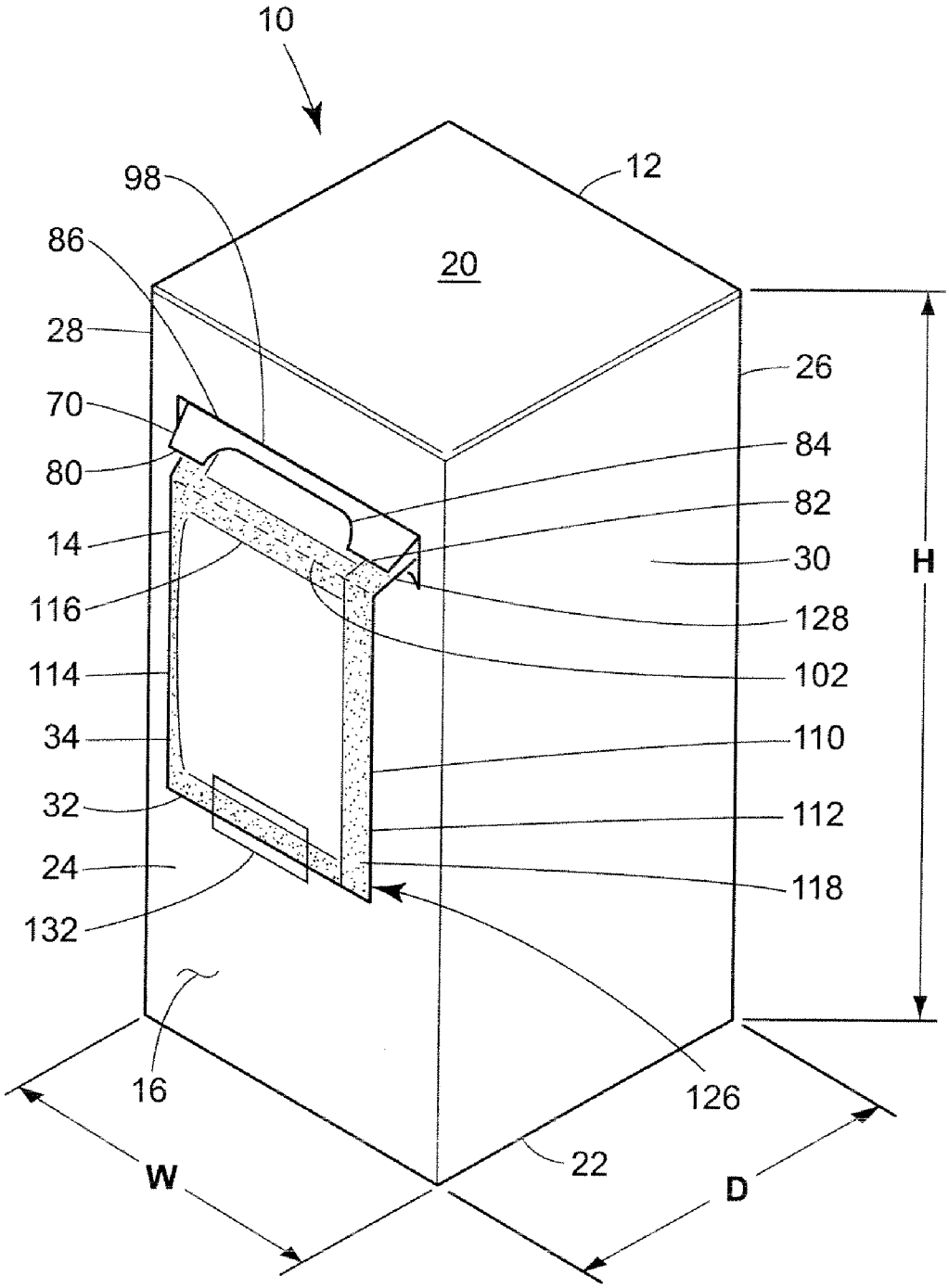
10
12
98
86
20
28
26
70
84
80
82
14
30
H
116
128
114
102
34
110
32
112
24
118
132
16
126
22
W
D

FIG. 2

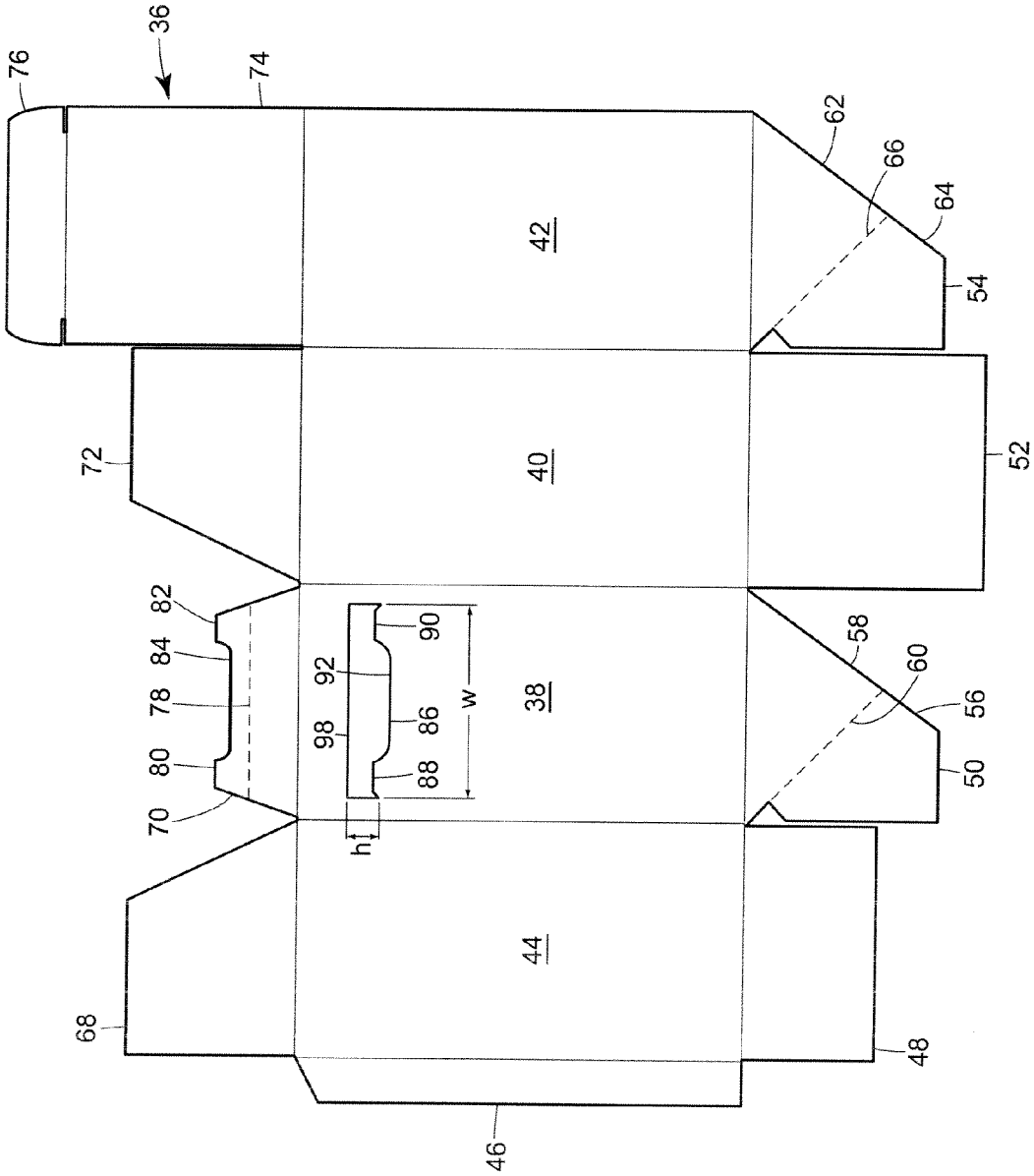
36
76
74
42
62
66
64
54
72
40
52
82
84
78
80
70
92
98
90
86
88
w
h
38
58
60
56
50
44
68
48
46

FIG. 3

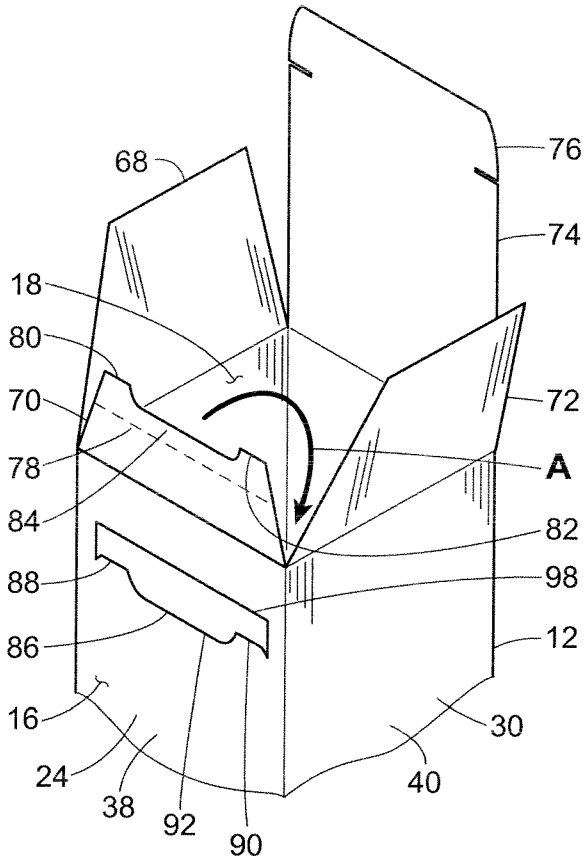
68
76
74
18
80
70
72
78
A
84
82
88
98
86
12
16
30
24
40
38
92
90

FIG. 4

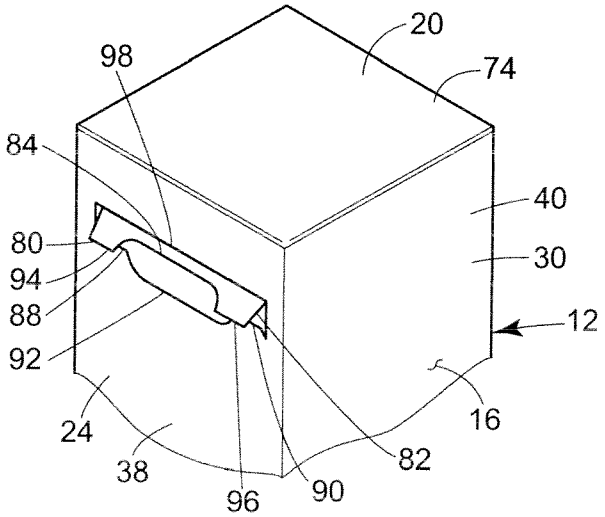
20
98
74
84
40
80
30
94
88
12
92
16
24
82
38
96
90

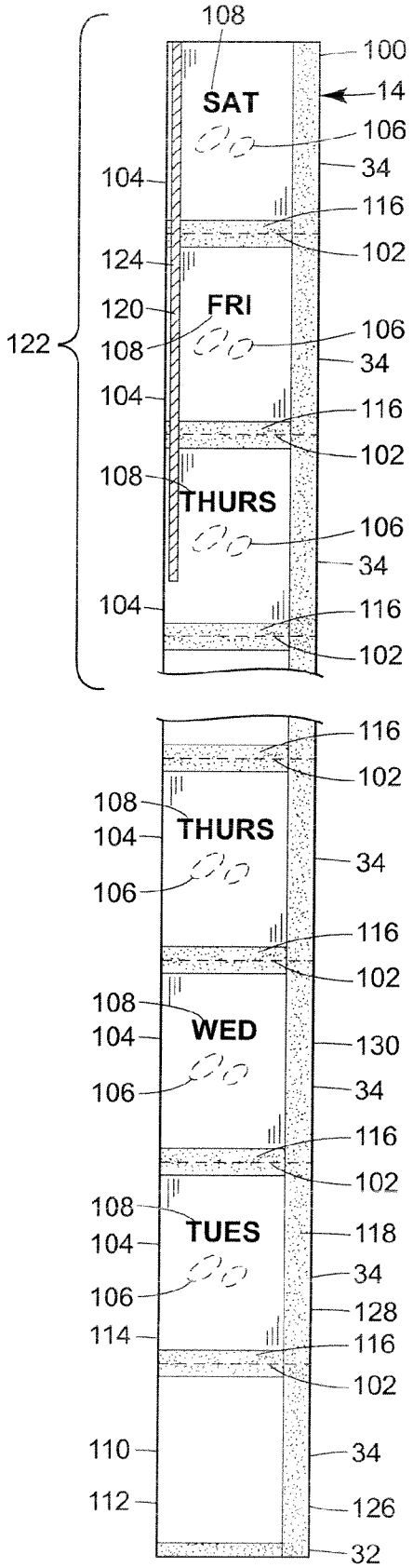
108
100
SAT
14
106
34
104
116
102
124
FRI
120
122
108
106
34
104
116
102
108
THURS
106
34
104
116
102
116
102
108
THURS
104
34
106
116
102
108
WED
104
130
106
34
116
102
108
TUES
118
104
34
106
128
114
116
102
110
34
112
126
32

FIG. 5

FIG. 6

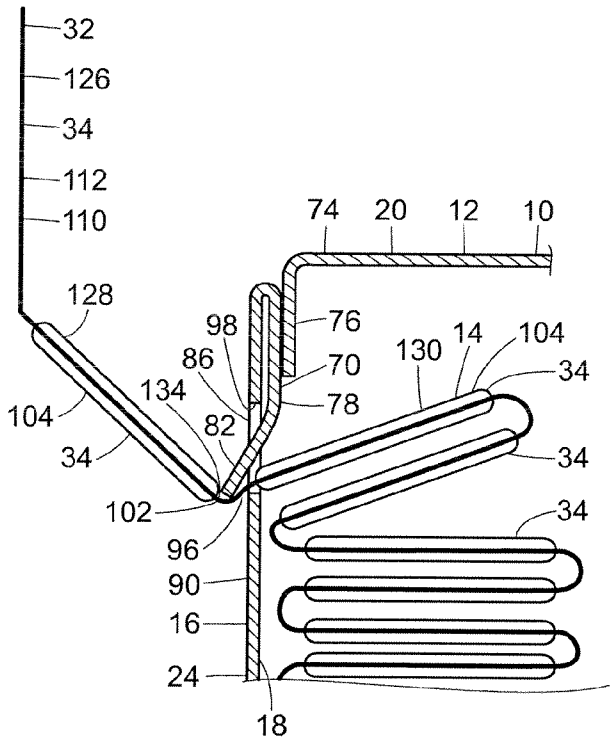
32
126
34
112
110
74
20
12
10
128
98
76
86
70
130
14
104
34
134
78
104
82
34
34
102
96
34
90
16
24
18

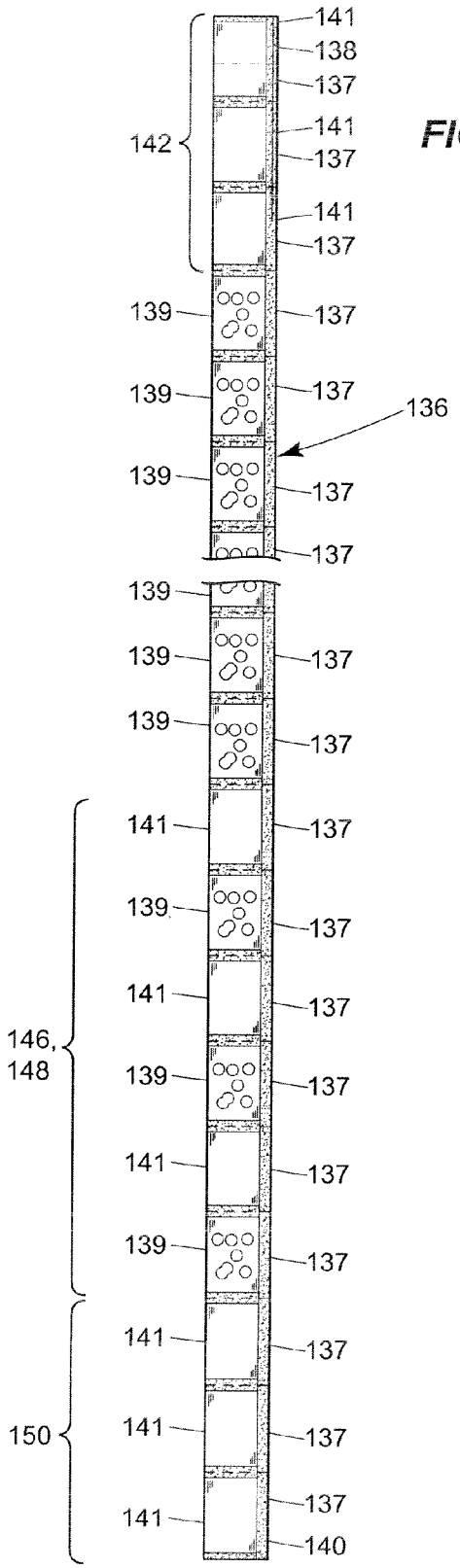
141
138
137
142
141
137
141
137
139
137
139
137
136
139
137
137
139
139
137
139
137
141
137
139
137
141
137
146,
148
139
137
141
137
139
137
141
137
150
141
137
141
137
140

FIG. 7

SERIALLY CONNECTED PACKETS WITH GRASPING PORTION

FIELD OF THE INVENTION

[0001] The following disclosure relates to a set of serially connected packets that can be used to store, for example, doses of medicine, and more particularly, to a set of serially connected packets that include a portion that can be easily grasped.

BACKGROUND OF THE INVENTION

[0002] It is well known that people purchase medications prescribed by doctors to address illnesses or unhealthy conditions. Each prescription generally is delivered to the user in a vial with instructions regarding, for example, the name of the medication and the frequency in which the medication is to be ingested. In a case where a user is taking one or two medications, he or she can generally remember to take the medications at the correct times.

[0003] However, certain users require several medications, each to be taken at varying intervals. This leaves the user to his or her own devices to sort through many vials, remembering which medication is to be taken at which time. This system, while simple, can be confusing. The user is at risk of mistakenly taking too much or too little of a prescribed medication, which can be dangerous. Further, some households have multiple people taking medications. While certain entities have placed color coded-rings about the necks of these vials, there is no easily identifiable way to discern which of the vials are for which family member.

[0004] To address this issue, medication cases have been developed with individual compartments that are each labeled for a particular day of the week. The user can then sort the pills into each of the compartments according to which pills need to be taken on which days. If the user is correct in his or her sorting, this system is effective to indicate to the user whether or not he or she has taken the required medication for the day. However, this system also depends on the user to correctly sort each of the medications into the correct individual compartments. Further, pills can spill from one compartment to the next.

[0005] Recently, a system has been developed by Prairie Stone Pharmacy in which a user's medications are delivered in individual packets connected together by perforated connections to form a strip. All of the medications that a user requires for a day (or another particular time period) is stored in a single packet. The user's medications for the next day are stored in the adjacent packet. Each packet includes indicia that instruct the user at which time to take the medication. For example, a first packet indicates Monday, the second packet indicates Tuesday, etc. Further, the strip is stored in a container, where the container has an opening, and the strip may be pulled out of the container through the opening. The user can tear off individual packets, while the remaining packets stay in the container.

[0006] Several problems still exist with this most recent system. First, the system provides no structure to aid the user in grasping the first packet filled with medication. In other words, when this system is delivered, the entire strip must disposed within the container to protect the medication, and the user is required to open the container and feed the strip through the opening him or herself. Next, the opening of the container has no structure to pinch or otherwise maintain the strip or aid in tearing a first packet from a second packet. Because the container does not grasp the strip, after a packet is torn away from the strip, the strip is not adequately held within the opening of the container. Finally, the system provides no indication that a user is running low on medication. Thus, without looking inside container, the user has no idea if he or she must refill the prescription.

BRIEF DESCRIPTION OF THE DRAWINGS

[0007] FIG. **1** is a perspective view of a medicine dispensing assembly.

[0008] FIG. **2** is a plan view of a blank used to construct the container of the medicine dispensing assembly of FIG. **1**.

[0009] FIG. **3** is a perspective view of a portion of the container of FIG. **1** in a partially constructed format.

[0010] FIG. **4** is a perspective view of a portion of the container of FIG. **1** is a fully constructed format.

[0011] FIG. **5** is a plan view of a strip of medicine packets.

[0012] FIG. **6** is a cross sectional view of the medicine dispensing assembly, taken along line **6-6** in FIG. **1**.

[0013] FIG. **7** is a plan view of a second example of a strip of medicine packets.

DETAILED DISCLOSURE

[0014] Referring now to FIG. **1**, an assembly **10** for dispensing medication is shown. The assembly includes a container **12** and a medication strip **14** ("the strip"). The container **12** is a parallelepiped shaped with an exterior surface **16** and an interior surface **18** (best seen in FIG. **3**). The container **12** has a top side **20**, a bottom side **22**, a front side **24**, a back side **26**, a left side **28**, and a right side **30**. The container further has a height H, width W, and depth D. In this example, the height H is longer than the width W and the depth D, such that the container **12** is relatively tall and narrow. A majority of the strip **14** is disposed within the container **12**, and a first end **32** of the strip **14** extends out of the container **12** such that the first end **32** is accessible by a user. As will be described more completely herein, the strip **14** includes a plurality of discrete packets **34** that can contain dosages of medication in the form of, e.g., pills.

[0015] Referring now to FIG. **2**, a blank **36** is depicted that can be used to form the container **12**. The blank **36** in this example is made from paper board, but it may be constructed from other materials such as corrugated paper or sheet plastic. The blank includes a front panel **38**, a right panel **40** foldably connected to the front panel **38**, a back panel **42** foldably connected to the right panel **40**, and a left panel **44** foldably connected to the front panel **38**. A connector tab **46** is foldably connected to the left panel **44**.

[0016] The blank **36** includes a left bottom tab **48** foldably connected to the left panel **44**, a front bottom tab **50** foldably connected to the front panel **38**, a right bottom tab **52** foldably connected to the right panel **40**, and a back bottom tab **54** foldably connected to the back panel **42**. The front bottom tab **50** includes a first bottom triangular portion **56** and a first bottom connector tab **58** separated by a perforation **60**, and the back bottom tab **54** includes a second bottom triangular portion **62** and a second bottom connector tab **64** also separated by a perforation **66**.

[0017] The blank **36** further includes a left top tab **68** foldably connected to the left panel **44**, a locking flap **70** foldably connected to the front panel **38**, a right top tab **72** foldably connected to the right panel **40**, and a back top tab **74** foldably

connected to the back panel **42**. Further, a back flap **76** is foldably connected to the back top tab **74**. The locking flap **70** can include a line of weakness **78** such as a perforation or a score to help in bending the locking flap **70**, as will be detailed herein. The locking flap **70** can include a first locking tab **80** and a second locking tab **82** each extending upwardly (as shown in FIG. **2**) and separated by a first recess **84**.

[0018] Finally, the front panel **38** of the container **12** includes an opening **86**. The opening **86** has a height h this is comparatively small relative to its width w. The front panel **38** includes a third locking tab **88** and a fourth locking tab **90** each extending upwardly into the opening **86**. The third locking tab **88** and the fourth locking tab **90** are separated from each other by a second recess **92**.

[0019] To construct the container **12**, each of the front panel **38**, the right panel **40**, the left panel **44**, the back panel **42**, and the connector tab **46** are folded at a right angle to each of their respective adjacent panels, and the connector tab **46** is bonded or otherwise connected to the back panel **42** such that a tubular structure is formed.

[0020] To form the bottom side **22**, the right bottom tab **52** is folded up and perpendicular to the right panel **40**. The second bottom connector portion **64** is folded 180° about the perforation **66** such that it lies on top of the second bottom triangular portion **62**. The back bottom tab **54** is then folded upwardly, and the second bottom connector portion **62** is then bonded or otherwise connected to the right bottom tab **52**. Likewise, left bottom tab **48** is folded 90° relative to the left panel **44**. The first bottom connector portion **56** is folded 180° about the perforation **60** such that it lies on top of the first bottom triangular portion **58**. The front bottom tab **50** is then folded upwardly, and the first bottom connector portion **56** is bonded to the left bottom tab **48**.

[0021] Referring now to FIGS. **3** and **4**, the top side **20** can now be formed. The locking flap **70** is folded 180° downwardly in the direction of arrow A relative to the front panel **38** such that the locking flap **70** generally bears against the interior surface **18** of the front panel **38**. The first and second locking tabs **80**, **82** are pushed through the opening **86**. The first and second locking tabs **80**, **82** then bear directly on the exterior surface **16** of the front panel **38** in general, and in particular, the first and second locking tabs **80**, **82** bear directly on the third and fourth locking tabs **88**, **90**, respectively. Due to the resiliency of the blank **36**, the first locking tab **80** is essentially spring loaded by the bend about the line of weakness **78**, and it exerts a spring force onto the opposing third locking tab **88**, such that the first and third locking tabs **80**, **88** create a first pinch point **94** (FIG. **4**). The second and fourth locking tabs **82**, **90** operate in a similar manner to create a similar second pinch point **96**. The line of weakness **78** of the locking flap **70** aids in the first and second locking tabs **80**, **82** bending forward to extend through the opening **86**. Furthermore, the line of weakness **78** is coincident with a top edge **98** of the opening **86** to ease the bending of the locking flap **70** and the disposing of the first and second locking tabs **80**, **82** through the opening **86**.

[0022] The left top tab **68** and the right top tab **72** are folded downwardly. The back flap **76** is folded forwardly 90° relative to the back top tab **74**, and the back top tab **74** is folded 90° down onto the left and right top tabs **68**, **72**. The back flap **76** is inserted into the container **12** such that it bears against the locking flap **70** (seen best in FIG. **6**). Due to the resiliency of the back flap **76** and the dimensioning of the container **12**, the back flap **76** can exert a force on the locking flap **70**, pushing it against the interior surface **18** of the front panel **38**.

[0023] Referring now to FIG. **5**, the strip **14** of FIG. **1** is disclosed in detail. The strip **14** includes the first end **32** and a second end **100** and a plurality of individual packets **34** connected in a series. The packets **34** of the strip **14** are each individually sealed from each other, and each include a frangible connection **102** to each adjacent packet **34**. In this example the frangible connection **102** is a perforated connection **102**. The strip **14** includes a plurality of filled packets **104** that each include a dosage of medicine **106** that a user is prescribed to ingest at a particular time. In this example, the dosage of medicine **106** is two pills, but other types and quantities of medicine could be used.

[0024] Each filled packet **104** further includes indicia **108** printed thereon. In the disclosed example, the indicia **108** is simply a day on which the user is to ingest the pills **106** held in the particular filled packet **104**. However, the disclosed indicia **108** is merely for simplicity of the drawings, and one of skill will understand that the indicia **108** can provide many different types of information. For example, the indicia **108** can disclose the time and date to ingest the medicine **106**, the names and strengths of the medicines disposed in the packet, the patient name, the prescribing doctor's name, and so forth.

[0025] Furthermore, the strip **14** may include at least one empty packet **110**. i.e., a packet containing no pills. In this example, a first packet **112** of the strip **14** at the first end **32** is empty.

[0026] The strip **14** can be made from a long, narrow sheet of clear plastic. The sheet is folded over itself along its length to form a left edge **114**. The sheet then is subjected to a series of horizontal heat seals **116** such that the horizontal heat seals **116** and the left edge **114** form three sides of each packet **34**. The pills **106** can then be inserted into the respective packets **34**, and the sheet is subjected to a vertical heat seal **118** to close each of the packets **34** and seal each set of pills **106** within each packet **34**. Perforations **102** can then be added along the horizontal heat seals **116** such that each packet **34** can be torn from an adjacent packet **34**. Although heat sealing is disclosed to form three sides of each individual packet **34**, other forms of sealing can be used, such as sonic welding, adhesives, and the like.

[0027] The strip **14** further includes an indicator **120** at the second end **100** to inform the user that that the packets **34** bearing the indicator **120** are adjacent the second end **100**, and thus that there are only a few remaining packets **34** in the container **12**. In this example, the strip **14** includes an ending group **122** of packets **34** adjacent the second end **100**. The ending group **122** of packets **34** can be the last remaining packets in the container, as in this example, but the ending group **122** can also be a set of packets **34** prior to the last remaining packets in the container. The indicator is **120** a stripe **124** extending over the ending group **122**. Here, the ending group **122** includes a total of three packets **34**. However, this is only one example, and the stripe **124** could extend over any number of packets **34** to provide more notice to the user that he or she needs to refill his or her prescription. As used in this disclosure, the term "adjacent the second end" means closer to the second end **100** than the first end **32**. The term "adjacent the first end" means closer to the first end **32** than the second end **100**.

[0028] As shown in FIGS. **1** and **5**, the first packet **112** of the strip **14** at the first end **32** is empty, i.e., it contains no medication, and it forms a grasping portion **126**. The first packet

112 is connected to a second packet **128** that is a filled packet **104** and that is within the interior of the container **12**. The second packet **128** is connected to a third packet **130** that is also filled. The first packet **112** is affixed to the exterior surface **16** of the container **12** with a piece of tape **132**. In this manner, the assembly **10** can be manufactured and/or shipped with a portion of the strip **14** maintained outside of the container **12** and the filled packets **104** inside the container **12**. The first packet **112** can be affixed to the exterior surface **16** in other ways, such as adhesive or simply a shrink wrapped plastic sheet tightly encompassing the assembly **10**. Of course, the assembly **10** can be manufactured and/or shipped with the entire strip **14** disposed within the container **12**.

[0029] Referring now to FIG. **6**, to use the medicine dispensing assembly **10**, a user grabs the grasping portion **126** and pulls the strip **14** until the second packet **128** is out of the container **12**. Optimally, the user pulls the strip **14** until the perforated connection **102** between the second packet **128** and the first packet **112** is disposed under the first and second locking tabs **80**, **82**. The user can then pull upwardly on the strip **14**, and the perforated connection **102** will tear against the first and second locking tabs **80**,**82**. The user thereby tears the second packet **128** apart from the third packet **130**, and then can tear open the second packet **128** and ingest the pills **106**.

[0030] A front edge **134** of the third packet **130** is held in place between the first and third locking tabs **80**, **88**, and between the second and fourth locking tabs **82**, **90** due to the force of the first and second locking tabs **80**, **82** bearing on the third and fourth locking tabs **88**, **90**. Because of the first recess **84** and the second recess **92**, the user may conveniently grasp the front edge **134** of the third packet **130** by grasping the third packet **130** in the area of the first recess **84** of the locking flap **70** and the second recess **92**. The user can then pull out the third packet **130** as outlined above, and repeat for further packets **34**.

[0031] After using the assembly **10** for several days or weeks, the user will notice that the selected packet **34** that he or she tears off includes the indicator **120**. The user will then know that the selected packet **34** that he or she is grasping is adjacent the second end **100**. In other words, when a user grabs a selected packet **34** bearing the indicator **120**, he or she knows that they are running out of medication, and they need to either refill the prescription or contact their physician.

[0032] A second example of a strip **136** with a first end **138** and a second end **140** is shown in FIG. **7**. Again, the strip **136** includes a series of packets **137** with both filled packets **139** and empty packets **141**. In this example, the strip **136** includes a second example of a grasping portion **142**. Here, the grasping portion **142** is three empty packets **141** at the first end **138**. Three empty packets **141** may be easier to grasp when pulling the first end **138** of the strip **136** from the container **12**. Accordingly, it may be decided that the grasping portion **126**, **142** be one, two, three, or more empty packets **141** at the first end **138**. In other examples of a grasping portion not shown, the grasping portion can be any structure that aids a user in grasping the first end the strip. For example, the grasping portion can be tab coupled to the first packet. Further, the grasping portion can be any of a string, a sheet, a loop, a clip or the like coupled to the first packet. If the first packet is a filled packet, then the first packet can be disposed within the container **12**, and the grasping portion extends through the opening.

[0033] The strip of FIG. **7** also includes a second example of an ending group **146** and indicator **148**. In this example, the ending group **146** includes a set of packets **137** adjacent the second end **140** where the packets **137** alternate between a filled packet **139** and an empty packet **141**. The indicator **148** of this example is the ending group **146** forming the alternating set **146**. Accordingly, a user will see the alternating set **146** of filled packets **139** and empty packets **141** and understand that his or her prescription needs to be refilled. In other examples not shown, the indicator **148** could be a number printed on a packet **137** indicating how many days until the prescription runs out, or a written warning to refill the prescription. Further, the indicator **148** could be that the indicia **108** is printed in a different color in the ending group. In other words, for the majority of the strip, the indicia **108** on the packets **137** are printed in an first color, such as green, but the indicia **108** on the packets **137** in the ending group **146** is printed in an second color, such as red, or even combinations of colors.

[0034] The strip of FIG. **7** further includes a boosting group **150** of packets **137**. The boosting group includes a total of three empty packets **141** at the second end **140** of the strip **136**. As will be understood, the second end **140** of the strip **136** is disposed at the bottom side **22** of the container **12**. By including a boosting group **150** at the second end **140**, the filled packets **139** are boosted upwardly away from the bottom side **22** of the container **12**. This can make it easier to pull the filled packets **141** through the opening **86**.

[0035] Further, the container **12** may be constructed of different colors. In some households, multiple people use prescription medications. Thus, a first container can be a first color such as blue, and a second container can be a second color such as red or any other color that is different than the first color.

[0036] Numerous additional modifications and alternative embodiments of the invention will be apparent to those skilled in the art in view of the foregoing description. This description is to be construed as illustrative only, and is for the purpose of teaching those skilled in the art the best mode of carrying out the invention. The details of the structure and method may be varied substantially without departing from the spirit of the invention, and the exclusive use of all modifications which come within the scope of the appended claims is reserved.

1. A dispensing assembly, comprising:

a container with an interior and an opening;

a strip having a first end and a second end, a portion of the strip disposed in the interior of the container, the strip comprising a plurality of packets connected in a series, the plurality of packets including at least one filled packet that is filled with a medication,

wherein the strip extends at least partly through the opening of the container such that at least a portion of a first packet of the strip is disposed outside of the container to aid a user in grasping the strip;

a first pair of tabs extending into the opening of the container; and

a second pair of tabs extending into the opening of the container and resiliently bearing against the first pair of tabs to retain the strip at least partly extending through the opening, wherein the first pair of tabs oppose the second pair of tabs such that a force between the first and second pairs of tabs pinch the strip to retain the strip at least partly extending through the opening.

2. The dispensing assembly of claim **1**, the container including an exterior surface, wherein the first packet is adhered to the exterior surface.

3. The dispensing assembly of claim **2**, wherein the first packet is adhered to the exterior surface by tape, glue, elastic band, or a polymer film tightly wrapped about the container.

4. (canceled)

5. The dispensing assembly of claim **1**, wherein a front edge of a packet of the strip is disposed between the first pair of tabs and the second pair of tabs.

6. The dispensing assembly of claim **1**, the container having a top side and a bottom side, the opening closer to the top side than the bottom side, the strip including a set of empty packets at the second end, wherein the set of empty packets support the filled packet from beneath.

7. The dispensing assembly of claim **1**, wherein the filled packet includes indicia that indicates a date a user is to ingest the medication, wherein the first packet bears no indicia.

8. A dispensing assembly, comprising:

a container with an interior and an opening;

a strip having a first end and a second end, a portion of the strip disposed in the interior of the container, the strip including grasping means and a plurality of packets, the grasping means associated with the first end of the strip for aiding a user to grasp the strip, the plurality of packets connected in a series and including at least one filled packet that is filled with a medication;

a first pair of tabs extending into the opening of the container; and

a second pair of tabs extending into the opening of the container and resiliently bearing against the first pair of tabs,

wherein the strip extends at least partly through the opening of the container such that the grasping means is disposed outside of the container and a force between the first and second pairs of tabs retains the strip at least partly extending through the opening.

9. The dispensing assembly of claim **8**, the container including an exterior surface, wherein the grasping means is adhered to the exterior surface.

10. The dispensing assembly of claim **9**, wherein the grasping means is adhered to the exterior surface by tape, glue, or a polymer film tightly wrapped about the container.

11. The dispensing assembly of claim **8**, wherein the first pair of tabs oppose the second pair of tabs, and the strip is disposed between the first pair of tabs and the second pair of tabs.

12. The dispensing assembly of claim **11**, wherein a front edge of a packet disposed adjacent the grasping means is disposed between the first pair of tabs and the second pair of tabs.

13. The dispensing assembly of claim **8**, the container having a top side and a bottom side, the opening closer to the top side than the bottom side, the strip including a set of empty packets at the second end, wherein the set of empty packets support the filled packet from beneath.

14. The dispensing assembly of claim **8**, wherein the filled packet includes indicia that indicates a date a user is to ingest the medication, wherein the first packet bears no indicia

15. The dispensing assembly of claim **8**, wherein the grasping means is a first packet at the first end, the first packet being empty.

16. The dispensing assembly of claim **8**, wherein the grasping means is one of a tab, a string, a sheet, a loop, or a clip coupled to a packet of the strip.

17-20. (canceled)

21. The dispensing assembly of claim **1**, further comprising an indicator disposed adjacent the second end of the strip for indicating to a user that the dispensing assembly is almost out of packets.

22. The dispensing assembly of claim **8**, further comprising an indicator disposed adjacent the second end of the strip for indicating to a user that the dispensing assembly is almost out of packets.

* * * * *