I. C. LACEY.

FUEL OIL BURNER.

APPLICATION FILED JULY 18, 1919. RENEWED OCT. 25, 1920.

1,363,131. Patented Dec. 21, 1920.

Fig. 3.

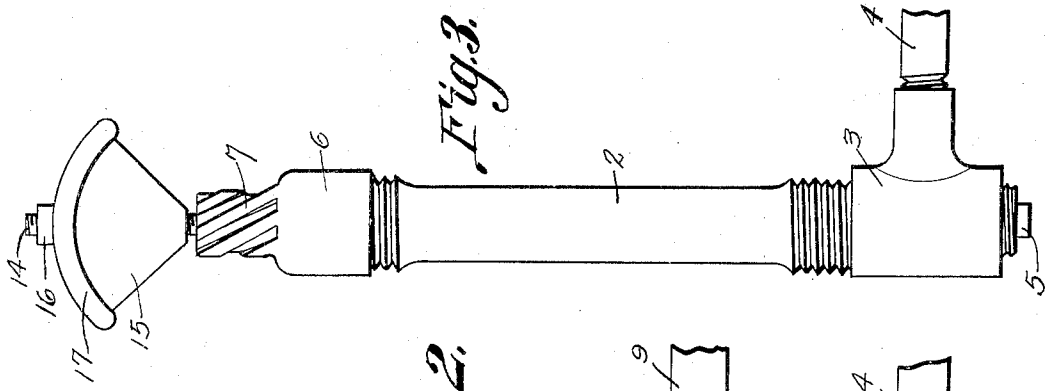

Fig. 2.

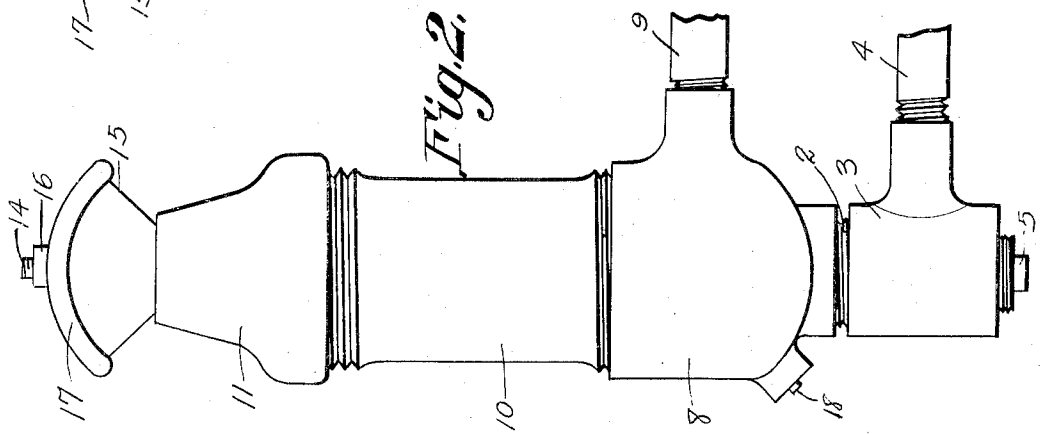

Fig. 1.

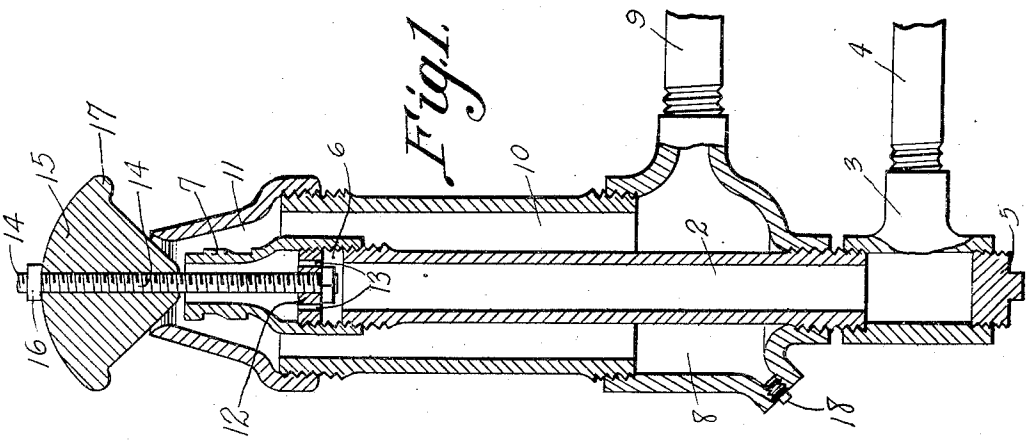

Inventor

I. C. Lacey.

Witness

A. R. Jones

By C. A. Snow & Co.

Attorneys

UNITED STATES PATENT OFFICE.

IRA C. LACEY, OF OAKLAND, CALIFORNIA.

FUEL-OIL BURNER.

1,363,131. Specification of Letters Patent. Patented Dec. 21, 1920.

Application filed July 18, 1919, Serial No. 311,798. Renewed October 25, 1920. Serial No. 419,535.

To all whom it may concern:

Be it known that I, IRA C. LACEY, a citizen of the United States, residing at Oakland, in the county of Alameda and State of California, have invented a new and useful Fuel-Oil Burner, of which the following is a specification.

This invention relates to improvements in fuel oil burners, the object of the invention being to provide an improved burner of the class wherein a blast of atomized oil and steam or air is ejected under pressure through co-axial nozzles, the organization being such that the spray is directed downward in a whirling film thereby to prevent burning of the tubes in a boiler.

A further object of the invention is to generally improve the structure of devices of this character whereby a more uniform and perfect combustion of the fuel is obtained than was heretofore possible, and which burner is comparatively simple in construction and economical to manufacture.

With the foregoing and other objects in view, which will appear as the description proceeds, the invention consists in the novel features of construction and combination of parts which will be more fully described hereinafter and particularly pointed out in the claim.

In the drawings accompanying and forming part of this specification,

Figure 1 is a vertical section of my improved burner in assembled condition;

Fig. 2 is a side elevation thereof; and

Fig. 3 is a side elevation of the oil tube and nozzle.

The same characters of reference designate the same parts in the different figures of the drawings.

Referring to the drawings, 2 designates an oil tube, which is exteriorly threaded at both ends thereof. On the lower end of the tube is secured a three-way connection or T member 3, into which is threaded an oil supply pipe 4 connected at its opposite end to any suitable source of supply, (not shown). A drain plug 5 is threaded into the lower end of the member 3. On the upper end of the tube 2 is threaded a nozzle 6, which is of smaller diameter at the upper than at the lower portion thereof, and which has formed in its periphery at such reduced portion a plurality of spiral grooves 7. A second three-way member or T, designated by 8, is threaded at its lower end on the tube 2 immediately above the member 3 and is in communication with a steam supply pipe 9 that is connected at its opposite end with a source of supply, (not shown). The pipes 9 and 4 constitute means for holding the burner vertical, with the spreader 15 (hereinafter described) at the top thereof. The portion of the member 8 above the point where it is threaded on the tube 2 is considerably larger than said tube and into said enlarged portion is threaded a steam tube 10, thereby providing a steam passageway between the tubes 2 and 10. On the upper end of the tube 10 is threaded a bell-shaped reducer 11, the outer end of which extends somewhat beyond the outer end of the nozzle 6 and is interiorly beveled. In the lower end of the nozzle 6 is threaded a disk 12, which is provided with a plurality of perforations 13 extending therethrough to permit the passage of oil up through the nozzle. The disk is also provided with a central opening in which is secured a stem or bolt 14 that extends upward through the nozzle and to some distance above the same, and on the upper portion of this bolt is threaded a spreader member 15 of cone shape at its underside and convex on its upper side, a nut 16 being threaded on the upper end of the bolt to retain the spreader in adjusted position on the bolt. This spreader is preferably provided around its periphery with a downwardly directed flange 17 by means of which the stream of oil and steam or air is directed outward and downward in a sheet or film over the entire bottom of the fire box or furnace. A suitable drain cock or plug 18 may be threaded into the member 8.

The burner above described is inserted through the center of the usual air space in the fire box so that no air can enter the fire box without passing through the fire first, thus eliminating the different currents of heat and cold air at different periods of operation. It is believed that the operation will be clear from the foregoing description. Oil is supplied through the pipe 4 and steam through the pipe 9, the steam passing up through the passageway between the tubes 2 and 10 and between the reducer 11 and the nozzle 6, the spiral grooves on the outer surface of the latter tending to give a gyrating motion to the steam, thus creating a si-

phon of oil through the oil ports 13 and delivering a whirling spray of atomized oil and steam around the cone-shaped spreader 15.

While I have described in detail the structure herein illustrated, it is to be understood that I do not thereby limit my invention to the precise features of construction shown, as I am aware that many mechanical changes and modifications may be made therein without departing from the spirit and scope of the invention as set forth in the claim hereto appended.

Having thus described my invention, what I claim is:

In a fuel oil burner, the combination of an inner oil tube, a larger tube encircling the oil tube and providing an intermediate steam passageway, means for supplying oil to the oil tube and means for supplying steam to the larger tube, a reducer nozzle secured to the upper end of the oil tube and provided with a plurality of spiral grooves on its periphery at the reduced portion thereof, an inverted bell-shaped member secured to the upper end of the larger tube and encircling said nozzle, the bell shaped member being spaced from the grooved periphery of the reducer, the upper end of said bell-shaped member being interiorly beveled, a perforated disk secured movably in the lower end of said nozzle, a stem secured centrally in said disk and extending beyond the bell-shaped member, a cone-shaped spreader adjustably carried by the stem and movable on the stem toward and away from the beveled portion of the bell-shaped member, the spreader being provided with a depending flange for directing downwardly the blast discharged from the burner, and means for holding the burner in a vertical position with the spreader at the top thereof.

In testimony that I claim the foregoing as my own, I have hereto affixed my signature in the presence of two witnesses.

IRA C. LACEY.

Witnesses:
LUCY M. LACEY,
GUY V. WRIGHT.