J. H. CRIST.

BRACKET SUPPORTING CONSTRUCTION.

APPLICATION FILED MAY 1, 1915.

1,230,999.

Patented June 26, 1917.

2 SHEETS—SHEET 1.

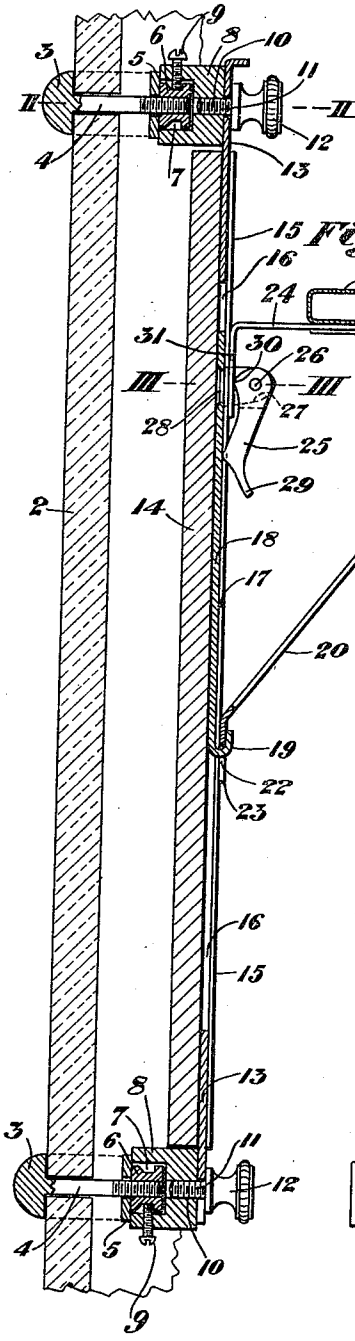

Fig. 1.

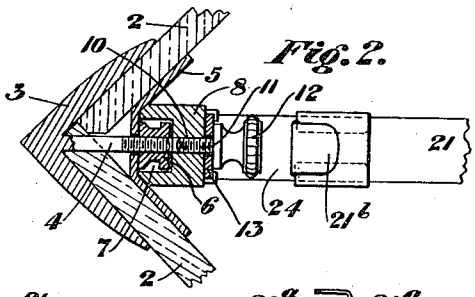

Fig. 2.

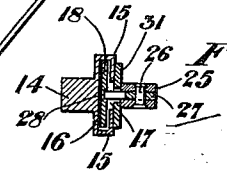

Fig. 3.

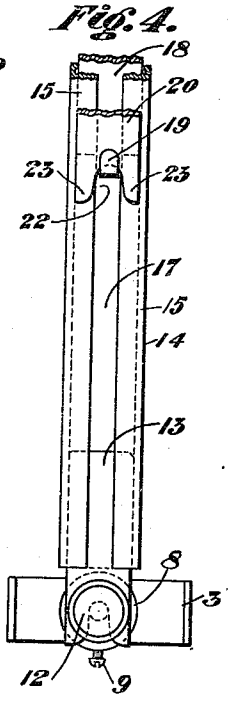

Fig. 4.



Fig. 7.

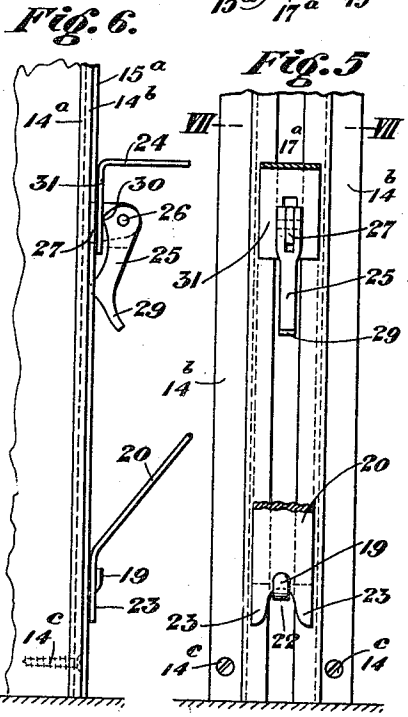

Fig. 6.

Fig. 5.

Inventor

John H. Crist

by C. M. Clark

his Attorney

THE NORRIS PETERS CO., PHOTO-LITHO., WASHINGTON, D. C.

J. H. CRIST.

BRACKET SUPPORTING CONSTRUCTION.

APPLICATION FILED MAY 1, 1915.

1,230,999.

Patented June 26, 1917.

2 SHEETS—SHEET 2.

Fig. 13.

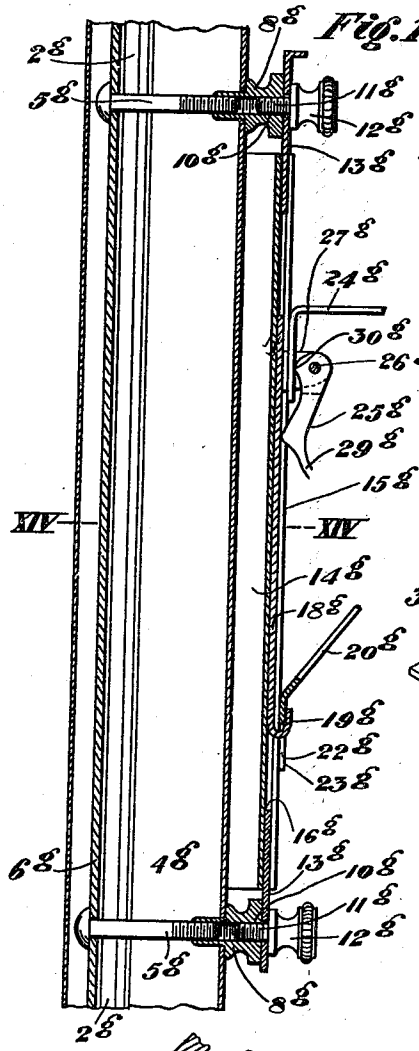

Fig. 8.

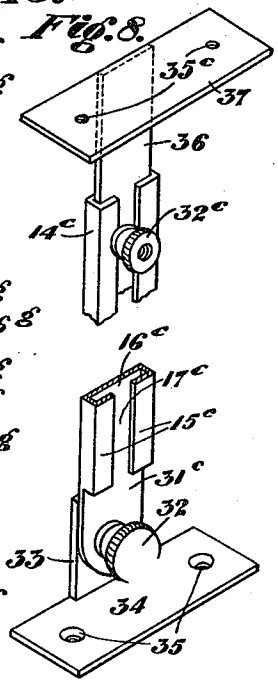

Fig. 9.

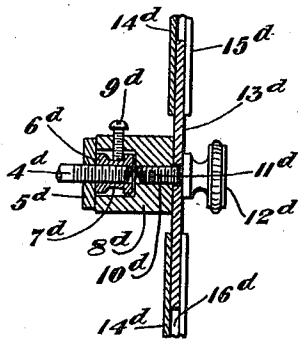

Fig. 11.

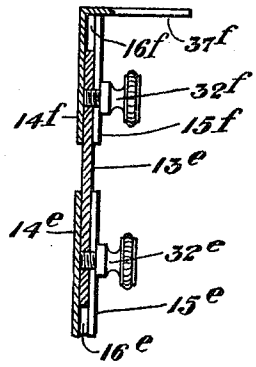

Fig. 10.

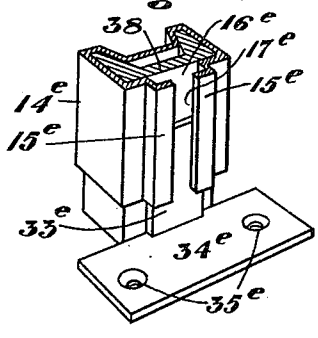

Fig. 12.

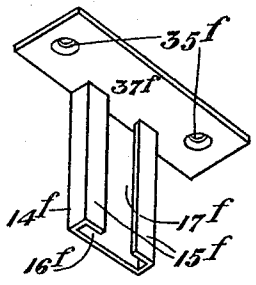

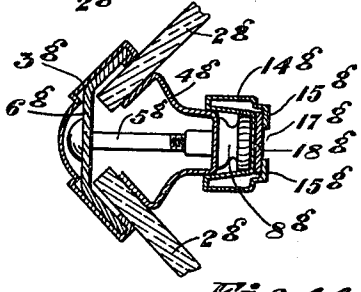

Fig. 14.

Inventor

John H. Crist

by C. M. Starke

his attorney

THE NORRIS PETERS CO., PHOTO-LITHO., WASHINGTON, D. C.

UNITED STATES PATENT OFFICE.

JOHN H. CRIST, OF OAKMONT, PENNSYLVANIA.

BRACKET-SUPPORTING CONSTRUCTION.

1,230,999. Specification of Letters Patent. Patented June 26, 1917.

Application filed May 1, 1915. Serial No. 25,143.

To all whom it may concern:

Be it known that I, JOHN H. CRIST, a citizen of the United States, residing at Oakmont, in the county of Allegheny and State of Pennsylvania, have invented certain new and useful Improvements in Bracket-Supporting Constructions, of which the following is a specification.

My invention consists of an improvement in bracket supporting construction adapted to be used with plate or other glass window fronts or stores or the like, or in connection with any suitable wall or other supporting structure.

It has in view to provide means for mounting and supporting bracket or shelf elements, fixedly locating them at any desired position, providing for connection or attachment with standard fixtures or framing, providing for adjustment as to height, location or adjustment of the several elements, and is constructed and adapted to be operated in the manner more fully hereinafter described.

The present invention is an improvement on types of construction forming the subject matter of my prior applications, Serial Nos. 867278 and 869590.

Preferred forms of the invention are shown in the accompanying drawings, in which—

Figure 1 is a vertical sectional view, showing one form of the invention as applied to the corner connecting elements of a plate glass window.

Fig. 2 is a transverse sectional view, indicated by the line II. II. of Fig. 1.

Fig. 3 is a cross sectional detail view, indicated by the line III. III. of Fig. 1.

Fig. 4 is a detail view in elevation, partly broken away, showing the mounting of the lower portion of the bracket and its support.

Fig. 5 is a similar view, showing a modified construction in which the vertically arranged supporting member is mounted directly upon a wall surface.

Fig. 6 is a view of said construction in edge elevation.

Fig. 7 is a cross sectional detail view, indicated by the line VII. VII. of Fig. 5.

Fig. 8 is a perspective view, partly broken away, showing a modified construction adapted for adjustment and attachment by terminal bracket portions.

Fig. 9 is a vertical sectional detail view, showing a joint construction for connecting adjacent supporting sections with the window connecting elements.

Fig. 10 is a detail perspective view showing a modified construction utilizing a reinforcing standard bar.

Fig. 11 is a vertical sectional detail view, showing the upper end of the supporting standard provided with a supplemental adjustable attaching bracket.

Fig. 12 is a detail perspective view, showing the attaching terminal of such construction, detached.

Fig. 13 is a view similar to Fig. 1, showing a modified construction of mounting frame.

Fig. 14 is a cross section on the line XIV. XIV. of Fig. 13.

Referring to the construction on sheet 1, in which the invention is illustrated as used in connection with a plate glass window, the lights 2, 2, are ordinarily arranged at or approximately at right angles to each other, more or less, or any one of the standard constructions used in such work, connected at their angular juncture, at vertically separated positions, by means of an outer angular bracket clip 3, adapted to embrace each edge portion of the adjacent plates.

Said bracket is provided with an integral bolt 4 extending inwardly through the plates at their juncture, and on the inside of the plates is an interfitting angular bracket 5, preferably of plate metal. The inner end of bolt 4 is threaded, as shown, and provided with a tightening thumb nut 6 having an undercut groove 7.

For the purpose of providing attaching means for the vertical bracket supporting member, I use a thimble 8, in the form of a stud, having a cylindrical opening at one end adapted to fit over the nut 6, and provided with a securing set screw 9 for tightening engagement, which is tightly screwed into the annular recess 7 of nut 6.

By this means the thimble stud 8 is fixedly secured in position, and extends inwardly beyond the said nut to any desired extent. Nut 8 is also provided with a centrally arranged threaded socket 10, into which is screwed the threaded stem 11 of a securing thumb nut 12, as clearly shown.

Between the body portion of said nut 12 and stud 8 is inserted the connecting plate or bar 13, of any desired length and width, one or both ends of which may extend vertically

beyond the stud 8, for engagement with the main supporting bar 14.

In the construction shown in Figs. 1, 2 and 3 of the drawings, bar 14 is of sufficiently heavy cross sectional body, by means of its rear rib, to provide the necessary stiffness and strength, although other constructions may be substituted, as hereinafter described.

The front portion of bar 14 is formed to provide the laterally extending retaining lip sections 15, 15, at each side of an interior cavity 16, and providing the intervening slot 17 for attachment of the bracket-holding member. Said bracket-holding member, in the construction shown, consists of a plate 18, of a cross sectional width and thickness to freely fit and slide within the longitudinal cavity 16.

Said plate, in the construction shown, is provided at one end with an attaching hook or terminal abutment 19, with which the leg 20 of the bracket 21 engages by a central notch 22 between the extended retaining lips 23.

For the purpose of fixedly securing the sliding plate 18, and also the upper bar 24 of the bracket in position at any point, I provide the cam locking device 25. Said device is pivoted at 26, at each side of an outwardly extending bearing stud 27, which is secured to plate 18 by riveting or otherwise, as indicated at 28.

The locking arm 26 is provided with an operating terminal 29 and a locking cam lug 30. Bracket 24 extends downwardly by a terminal 31, which is centrally slotted, and embraces stud 27 at each side, as clearly shown, and is thus located underneath and in the path of action of cam portion 30.

By this means, upon turning the cam to the position shown in Fig. 1, the parts are fixedly clamped together, and upon turning the cam upwardly, they are released, so that the bracket may be lifted upwardly and removed, and the plate 18 may be adjusted to any desired position vertically.

The bracket, in its entirety, is generally similar in construction to the one shown in my former application, Serial No. 867278, having the outer, preferably telescoping, diverging extensions 20^a having terminal upwardly and inwardly turned lips 21^a, while the central upper member 24 of the bracket is also provided with an adjustable clip member 21^b, slidably mounted thereon with sufficient frictional engagement to adapt it to be set against the inner edge of the shelf.

By this means, the outer edges being similarly engaged by terminal clip members 21^a, the shelf is fixedly held against displacement.

When it is desired to utilize the construction otherwise than with a window, as against a supporting wall or other surface, I form the main supporting bar 14^a of a continuous piece of sheet metal having the laterally extending retaining lip sections 15^a, 15^a, at each side of the interior cavity 16^a, providing the intervening slot 17^a for attachment of the bracket-holding member. The supporting bar 14^a is doubled together at each edge providing the reinforced attaching flange members 14^b, 14^b, adapted to be secured by screws 14^c at suitable intervals to the wall surface, as will be readily understood.

The construction as to the bracket-holding means is the same as above described, the several parts being indicated by corresponding numerals having the exponent *a*.

In Fig. 8, I show a modified arrangement utilizing a supporting bar member 14^c of sheet metal bent to provide the retaining lip sections 15^c, 15^c, the cavity 16^c, and slot 17^c for attachment of the bracket holding member, bar 14^c having at one end an extended lip terminal 31. Said terminal, by a hole therein, and a thumb or stud screw 32, is secured to an upstanding support 33, of a base 34. Said base may be secured to the floor or other supporting means by screws through screw holes 35, as will be readily understood.

The upper end of bar 14^c is similarly secured through slot 17^c and a stud bolt 32^c to a downwardly extending telescoping extension 36 of an upper supporting bracket 37 having similar securing screw holes 35^c, for attachment to the ceiling or other similar surface.

In such construction, the bar 14^c may be of any length desired, and is thus suitable for attachment of one or several of the brackets by the means above described.

Where it is desired to utilize such construction with intermittent securing attachments, as to the window corner joint members, already described, as in Fig. 9, the bar 14^d may be made in suitable sections, like bar 14 (Fig. 1), and connected by a telescoping plate or bar 13^d, which is secured by screw 11^d of thumb nut 12^d to threaded socket 10^d of thimble 8^d, the other parts being similarly identified with the exponent *d*.

In Fig. 10 I show a compound supporting frame construction, in which I utilize an internal reinforcing bar 38 of any suitable standard structural form, as a channel, surrounding which is the sheet metal casing 14^e. Said casing is adapted to conform generally to the cross section of bar 38, and is shaped at the front corresponding to the construction already described providing the lip sections 15^e at each side of the interior cavity 16^e providing the intervening slot 17^e for attachment of the bracket holding member.

A securing pedestal 34^e, preferably hav-

ing screw holes 35^e, and an upwardly extending support 33^e is incorporated with the bottom portion of such construction, providing means for attachment. The upper end may be secured to the ceiling or other attachment by similar means.

Either the upper supporting bracket 37 of Fig. 8 may be inserted and secured in cavity 16^e, or I may employ a supplemental telescoping connecting bar 13^e (Fig. 11).

By such construction, one end being inserted in the space 16^e and secured by the set screw 32^e, its other end extends into a similar space 16^f of an upper supporting bracket 37^f having screw holes 35^f for attachment to the ceiling, as will be readily understood.

By this means I provide for making variations in the length of the supporting bar structure from one attaching terminal to the other, to accommodate standard lengths of bars to varying heights within the limitations of practical application.

In Figs. 13 and 14, I show a further modified arrangement adapting the application of the invention to one standard form of window corner frame, similar to that shown in my prior application, No. 869590.

In such arrangement the glass plates 2^g are clamped between the outer framing member 3^g and an inner member 4^g by screws or bolts 5^g engaging an inner reinforcing strip 6^g.

The terminal nuts 8^g engage the threaded ends of bolts 5^g, and are themselves provided with threaded sockets 10^g and the thumb nuts 12^g having the bolt terminals 11^g.

A bar 13^g is secured to stud 8^g in the manner above described, and as shown, and extends into the space 16^g of the main bracket supporting member 14^g. Said member is, as to its front portion, of the same construction as already described, having the retaining flanges or lips 15^g at each side of the central slot 17^g. The bar itself is formed of sheet metal providing the parallel rearwardly extending doubled leg elements of the same general outline as the reinforcing channel member 38 of Fig. 10, and adapted to embrace between them the inner projecting central ridge of the frame member 4^g.

By this construction, the rigid connection of the parts is facilitated, so that when thumb screws 11^g are tightened, the bar 14^g will be held at each end, in tight embracing connection with the window framing member.

The bracket mounting is the same as above, the parts being referred to and identified by corresponding numerals having the exponent *g*.

With either of the several constructions as to the vertical supporting member, the bracket mounting bar 18 may be utilized with its clamping mechanism, whereby to mount the bracket member at any desired position.

While the bracket itself may be of the general form and construction illustrated, it will be obvious that various forms or designs of brackets or supporting members may be utilized for different uses or combinations with the main supporting structure, and the bracket itself, except as to its attaching elements, does not, *per se*, form any part of the present invention.

The construction, advantages and utility of the invention will be readily understood and appreciated from the foregoing description. It provides for great amplitude of location; enables easy and convenient attachment, detachment or adjustment of the bracket and its support; enables easy removal for cleaning or other purposes; the construction is substantial and durable, and economical to manufacture, and is adapted to a great variety of utilizations in supporting or displaying goods or merchandise.

It will be understood that the invention may be variously changed or modified in construction, design, or other details by the skilled mechanic, but that all such changes are to be considered as within the scope of the following claims.

What I claim is:

1. In bracket construction, the combination of a vertical standard member having a stiffening back portion and inwardly extending side portions providing an intervening space and a centrally arranged slot, and a supporting bar slidably mounted in said space having a locking cam adapted to bind upon the inner and outer faces of said side portions and clamp a bracket member and said bar to said side portions, and a supplemental bracket connecting device extending through said slot.

2. In a bracket construction the combination of a vertical standard member having a stiffening back portion and inwardly extending side portions providing an intervening space and a centrally arranged slot, and a supporting bar slidably mounted in said space having a locking cam adapted to clamp a bracket member and said bar against the outer and inner of said side portions. said supporting bar having a bracket engaging hook extending through said slot.

3. The combination with the joint member of a window having a holding bolt and nut, of a thimble secured thereto, and a supporting bar having an attaching portion secured to said thimble.

4. The combination with the joint member of a window having a holding bolt and nut, of a thimble provided with a set screw engaging the nut and a threaded socket, a

supporting bar, and an extension thereof provided with a securing screw engaging said socket.

5. The combination with the joint members of a window each having a holding bolt and nut, of thimbles secured to said nuts, and a supporting bar provided at each end with an attaching portion secured to said thimble.

6. A supporting bar of the class described composed of sheet metal having rearwardly extending doubled rib members, a central back forming portion, and inwardly extending side portions providing an intervening space and a centrally arranged slot.

7. In combination with a supporting bar of the class described having a back portion and inwardly extending side portions providing an intervening space and a centrally arranged slot, terminal attaching devices adjustably connected with the ends of said bar.

8. The combination with a vertical standard member of plate metal formed to provide a stiffening back portion and inwardly extending side portions providing an intervening slotted space, a reinforcing bar within the back portion, and a movable supporting bar slidably mounted within said space between the face of the reinforcing bar and said side portions provided at one end with a cam locking device adapted to clamp a bracket member and said bar against the outer and inner faces of said portions and at the other end with a bracket-engaging hook extending through said slot.

In testimony whereof I hereunto affix my signature in the presence of two witnesses.

JOHN H. CRIST.

Witnesses:
W. A. HICKMAN,
C. M. CLARKE.

Copies of this patent may be obtained for five cents each, by addressing the "Commissioner of Patents, Washington, D. C."