R. HENEAGE.

LOCKING-DEVICES FOR SAFE-DOORS.

No. 194,349. Patented Aug. 21, 1877.

Figure 1.

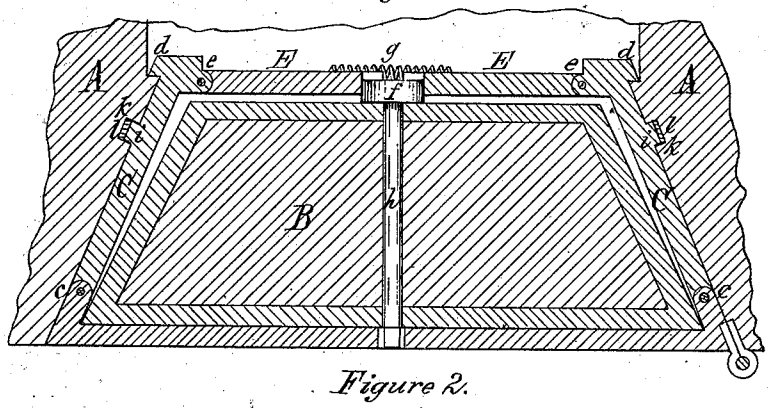

Figure 2.

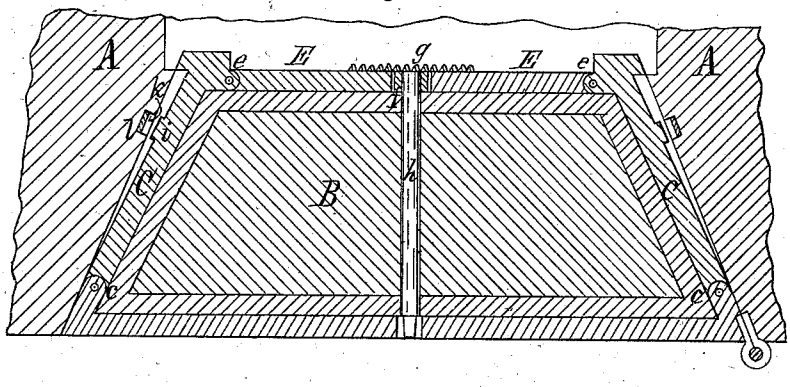

Figure 3.

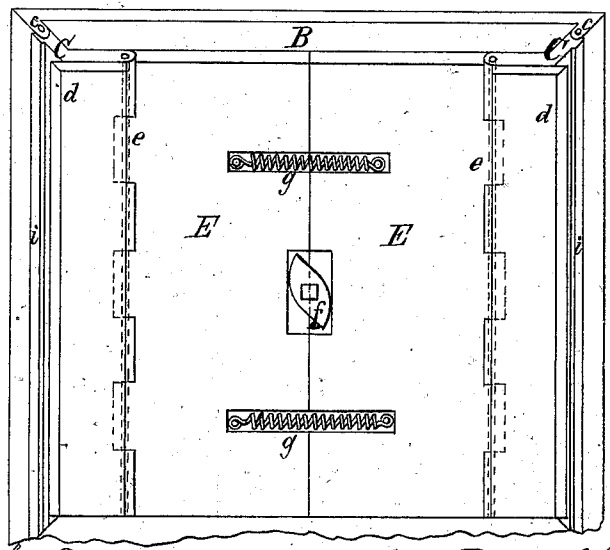

Witnesses
Chas. J. Buchheit
John L. Couidon

Inventor
Robert Heneage
by Edward Wilhelm
Attorney

N. PETERS, PHOTO-LITHOGRAPHER, WASHINGTON, D. C.

UNITED STATES PATENT OFFICE.

ROBERT HENEAGE, OF BUFFALO, NEW YORK, ASSIGNOR OF ONE-HALF HIS RIGHT TO ALBERT C. STEVENS, OF SAME PLACE.

IMPROVEMENT IN LOCKING DEVICES FOR SAFE-DOORS.

Specification forming part of Letters Patent No. **194,349**, dated August 21, 1877; application filed July 5, 1877.

To all whom it may concern:

Be it known that I, ROBERT HENEAGE, of the city of Buffalo, in the county of Erie and State of New York, have invented certain new and useful Improvements in Safe-Doors, which improvements are fully set forth in the following specification, reference being had to the accompanying drawing.

My invention relates to a device for locking the doors of safes in a firm and reliable manner; and it consists, principally, of two plates hinged to the sides of the safe-door near the front, and actuated by suitable mechanism, so that when the rear or inner ends of these side plates are swung outwardly they will engage with the side walls of the safe, and securely lock the door, as will be hereinafter more fully described.

In the accompanying drawing, Figure 1 is a horizontal section of a safe-door provided with my improvements, the door being locked. Fig. 2 is a similar view with the door unlocked. Fig. 3 is an inside elevation of the door.

Like letters of reference designate like parts in each of the figures.

A represents the walls of the safe, and B the door thereof. C C are two vertical plates arranged on the sides of the door B, and hinged thereto near the front, as shown at *c*. *d* is an outwardly-projecting flange arranged at the inner edge of each plate C, so as to project over the edge of the respective side wall when the plate C is swung against the same, as shown in Fig. 1. E E are two vertical plates arranged on the inner side of the door B, and hinged to the plates C at *e*, for opening and closing the latter. *f* is a cam arranged centrally between the plates E E, and bearing against the same, so that by turning the cam in the proper direction the plates E E are forced apart, and the inner ends of the plates C C consequently swung outwardly, so as to engage with the flanges *f* over the edges of the side walls A, thereby locking the door. *g* represents one or more springs, connecting the plates E E in such manner that they will be drawn together and the plates C C be returned to an unlocked position by the reaction of the spring when the cam *f* is released. If preferred, however, the cam *f* may be so constructed and connected with the plates E E that the latter will be forced apart and drawn together simply by the action of the cam, without the employment of any spring. The cam *f* is mounted on the inner end of a shaft or rod, *h*, with which the locking mechanism is connected in any suitable manner. *i* is an auxiliary locking-rib or flange arranged vertically on each plate C, and engaging in a corresponding groove, *k*, in the wall of the safe when the door is locked.

A strip, *l*, of rubber, cloth, or other suitable material, may be arranged in the groove *k*, so as to form a tight joint with the rib *i* when the door is locked.

Ordinarily the joints at the top and bottom of the safe-door are comparatively tight, while the joints at the sides of the door are always more or less imperfect, and form weak points, which render possible the forcible opening of the safe by the introduction of powder through the side joints by means of an air-pump.

My improved locking device, by tightly closing the side joints of the door from top to bottom, prevents the introduction of powder into the safe, and renders the forcible opening of the door very difficult, as the locking parts are in a position where they cannot be reached from the outside.

Having thus fully described my invention, what I claim as new, and desire to secure by Letters Patent, is—

1. The combination, with a safe-door, of the side plates C C, hinged to the door near the front, and constructed so as to lock the door when the inner ends of the side plates are swung outward, and forming a tight joint between the door and its seat, substantially as hereinbefore set forth.

2. The combination, with a safe-door, of the side plates C C, hinged to the door near the front, and actuating-plates E E, arranged on the rear side of the door, and hinged to the side plates and cam *f*, substantially as and for the purpose hereinbefore set forth.

3. The combination, with a safe-door, of the pivoted side plates C C, provided with ribs *i*, engaging in groove *k*, having packing-strips *l*, substantially as and for the purpose hereinbefore set forth.

ROBT. HENEAGE.

Witnesses:
EDWARD WILHELM,
CHAS. J. BUCHHEIT.