US 20220076853A1

(19) United States

(12) Patent Application Publication (10) Pub. No.: US 2022/0076853 A1

Marcille et al. (43) Pub. Date: Mar. 10, 2022

(54) **OPTIMIZED NUCLEAR FUEL CORE DESIGN FOR A SMALL MODULAR REACTOR**

(71) Applicant: **SMR Inventec, LLC**, Camden, NJ (US)

(72) Inventors: **Thomas Marcille**, West Linn, OR (US); **Joseph Rajkumar**, Cherry Hill, NJ (US)

(21) Appl. No.: **17/529,650**

(22) Filed: **Nov. 18, 2021**

Related U.S. Application Data

(62) Division of application No. 15/927,284, filed on Mar. 21, 2018, now Pat. No. 11,205,521.

(60) Provisional application No. 62/474,396, filed on Mar. 21, 2017.

Publication Classification

(51) **Int. Cl.**

G21C 3/18	(2006.01)
G21C 15/10	(2006.01)
G21C 11/06	(2006.01)
G21C 5/06	(2006.01)
G21C 5/02	(2006.01)

(52) **U.S. Cl.**

CPC ***G21C 3/18*** (2013.01); ***G21C 15/10*** (2013.01); *G21C 3/324* (2013.01); ***G21C 5/06*** (2013.01); ***G21C 5/02*** (2013.01); ***G21C 11/06*** (2013.01)

(57) **ABSTRACT**

A fuel core for a nuclear reactor in one embodiment includes an upper internals unit and a lower internals unit comprising nuclear fuel assemblies. The assembled fuel core includes an upper core plate, a lower core plate, and a plurality of channel boxes extending therebetween. Each channel box comprises a plurality of outer walls and inner walls collectively defining a longitudinally-extending interior channels or cells having a transverse cross sectional area configured for holding no more than a single nuclear fuel assembly in some embodiments. A cylindrical reflector circumferentially surrounds channel boxes and is engaged at opposing ends by the upper and lower core plates. Adjacent cells within each channel box are formed on opposite sides of inner walls such that the cells are separated from each other by the inner walls alone without any water gaps therebetween which benefits neutronics for some small modular reactor designs.

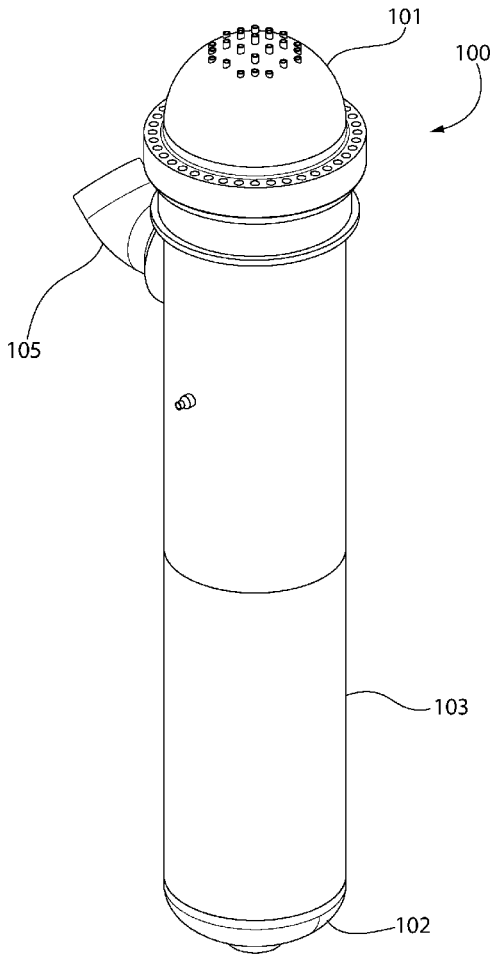

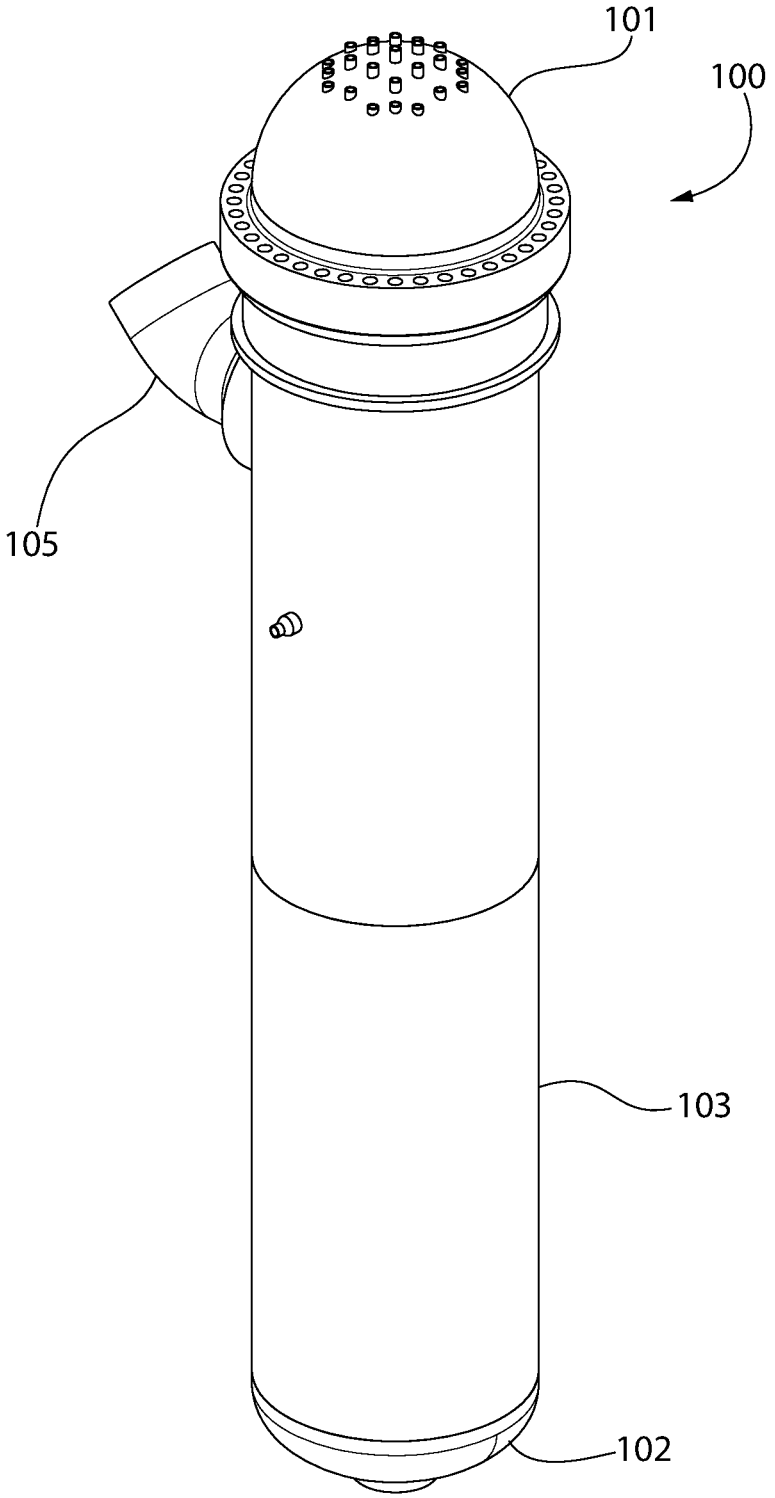

FIG. 1

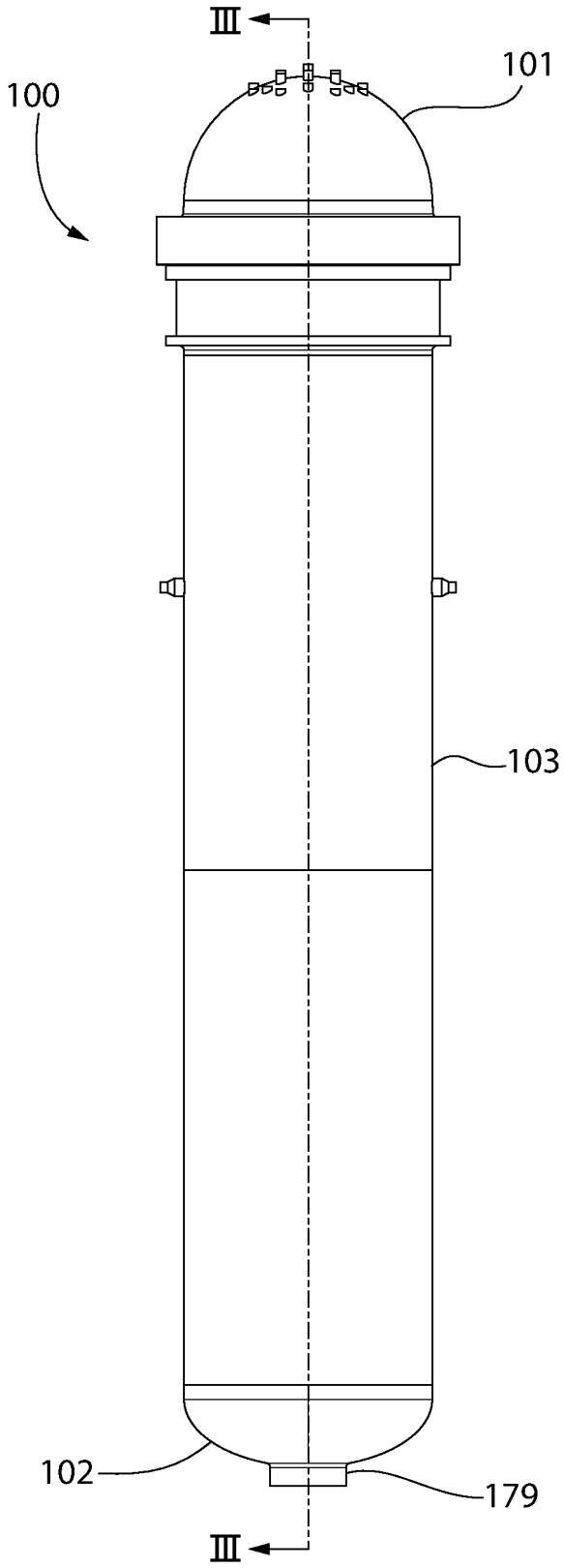

FIG. 2

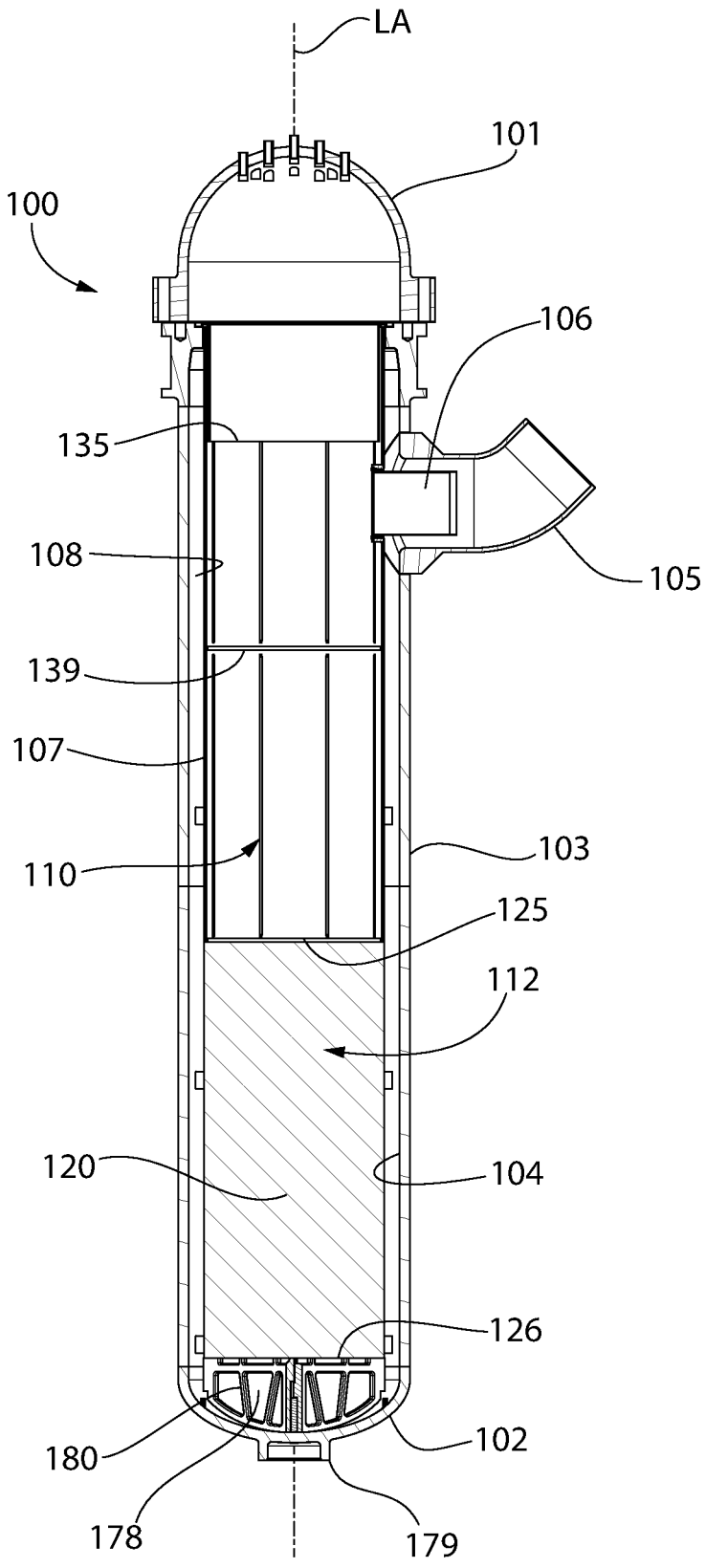
LA
101
100
106
135
108
105
139
107
103
110
125
112
120
104
126
102
180
178
179

FIG. 3

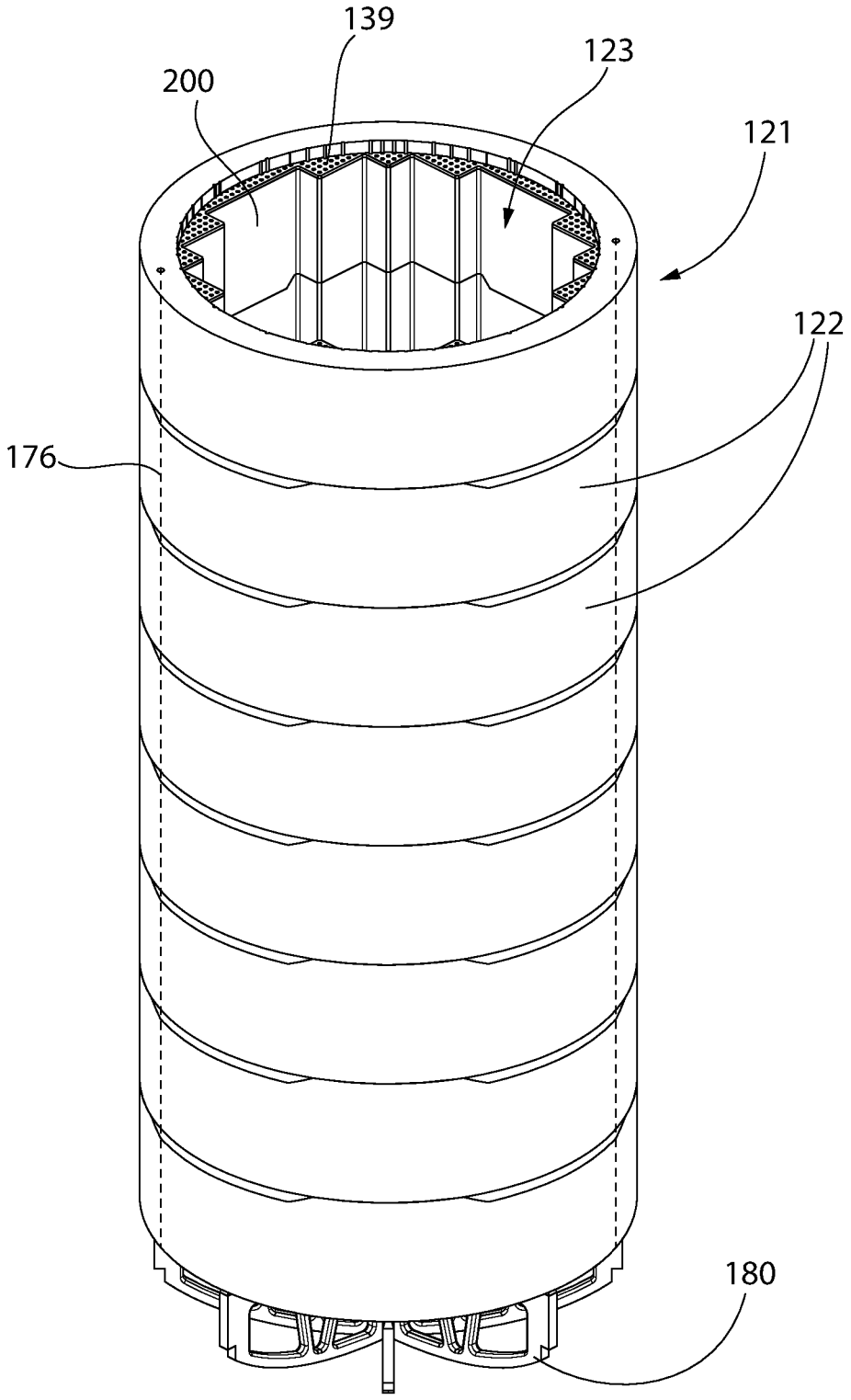

FIG. 4

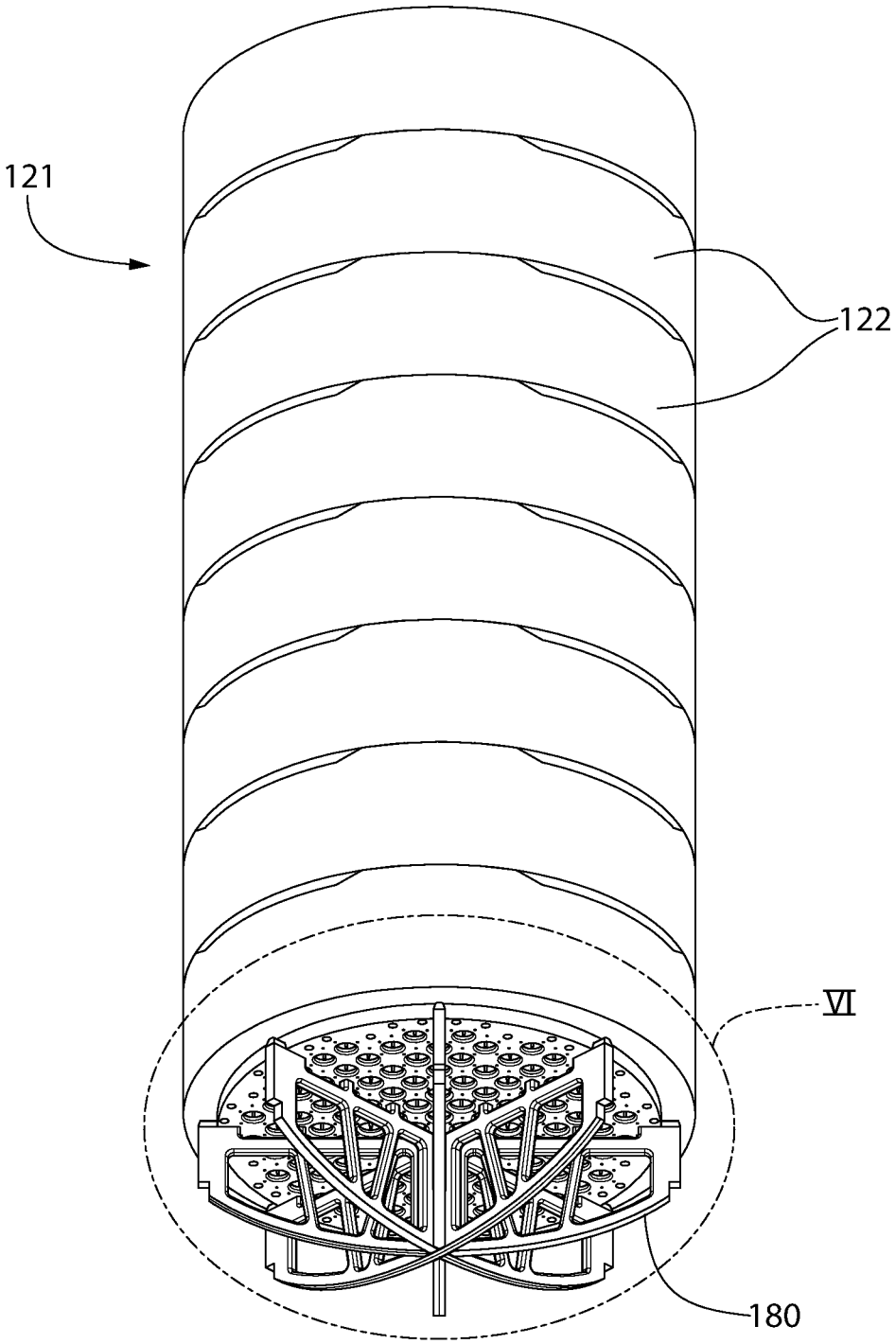

FIG. 5

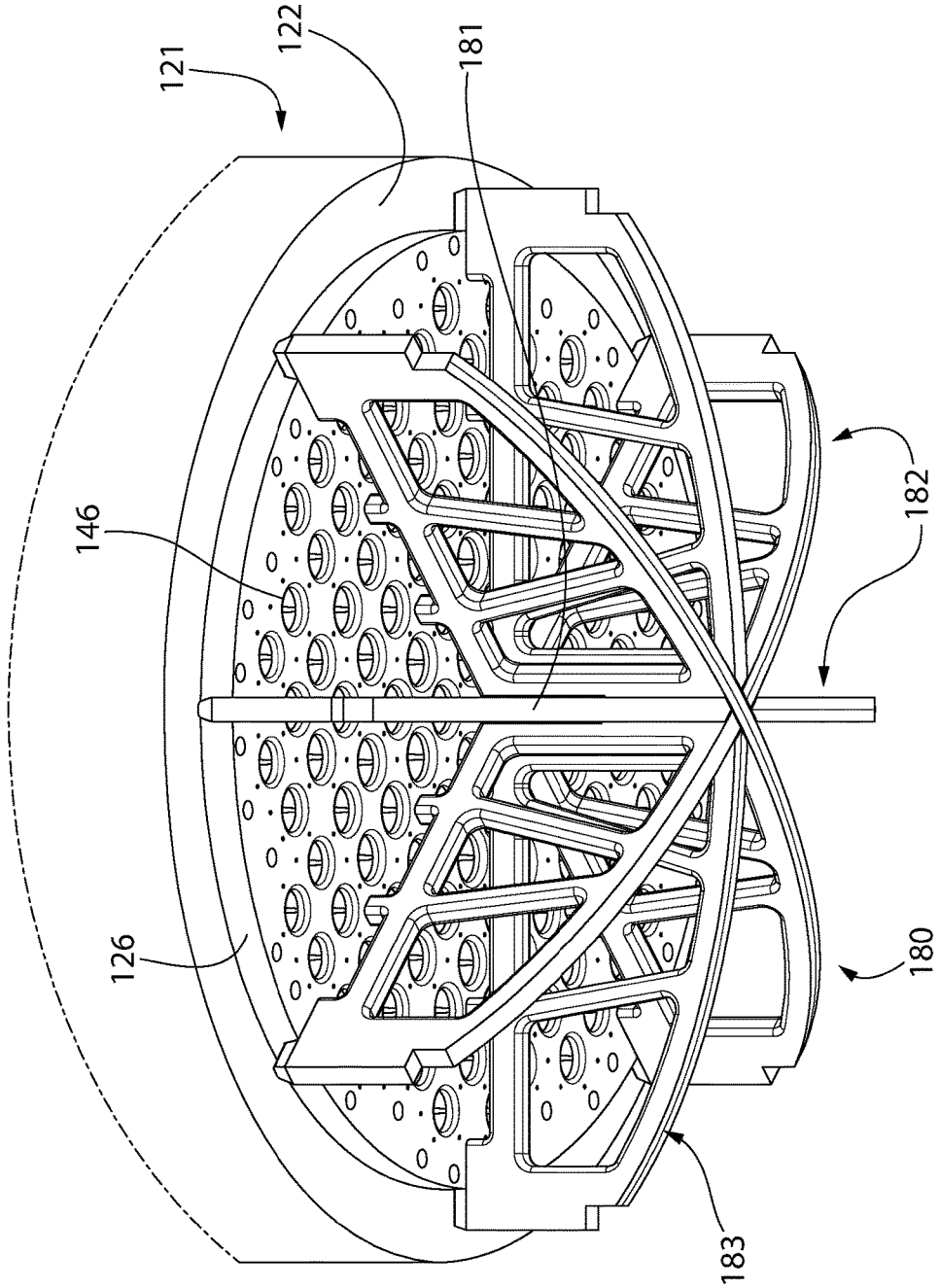

FIG. 6

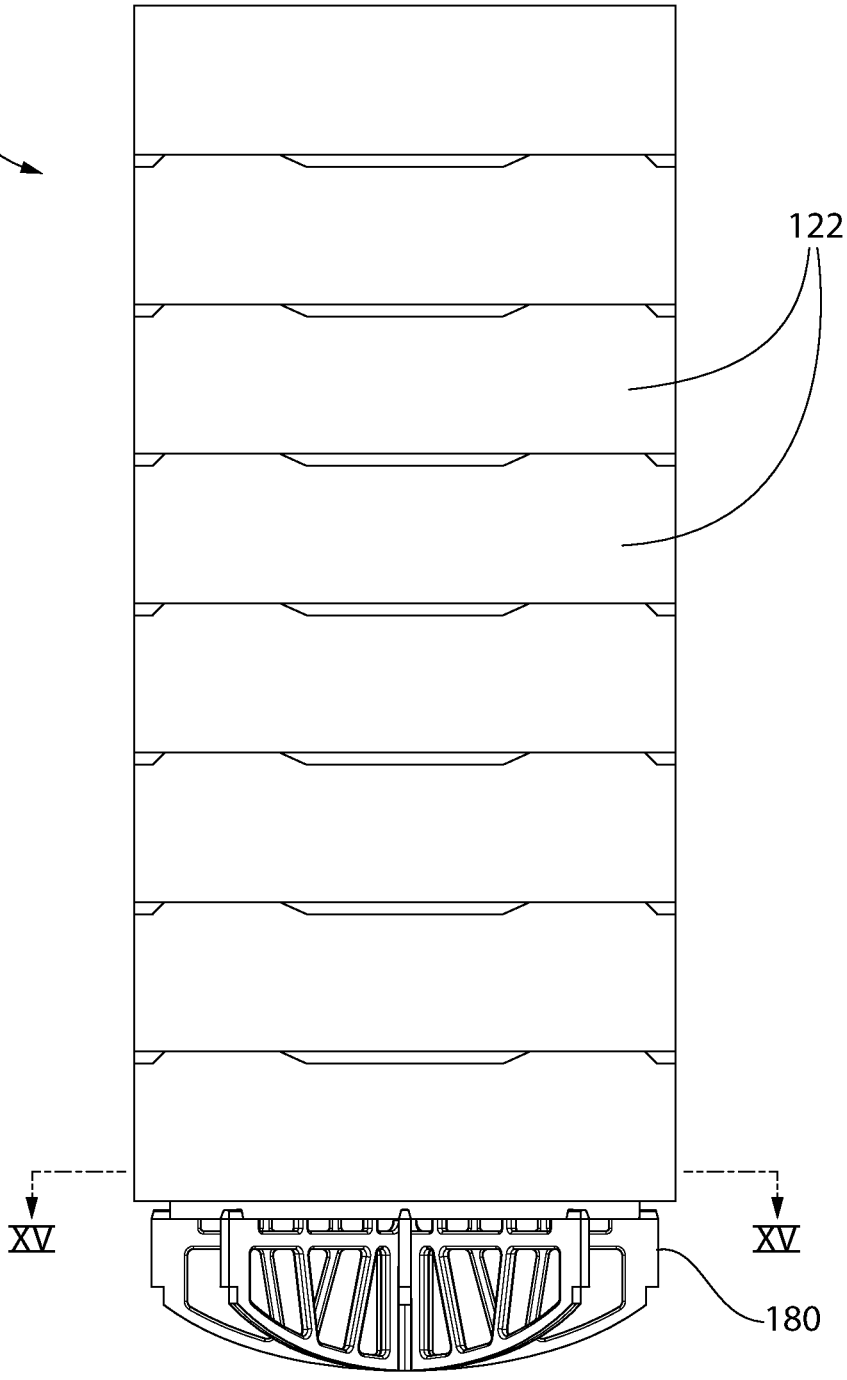

FIG. 7

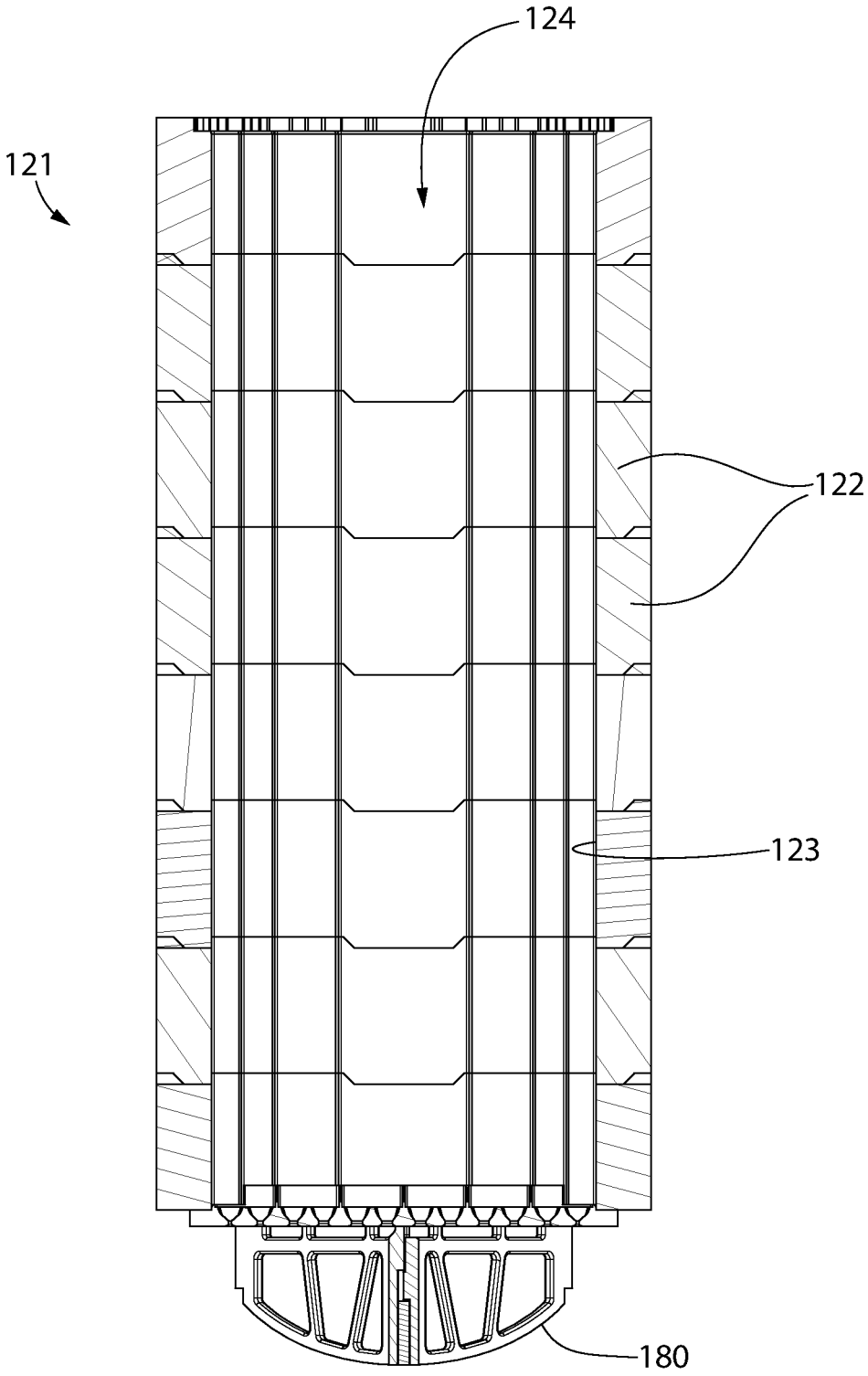

FIG. 8

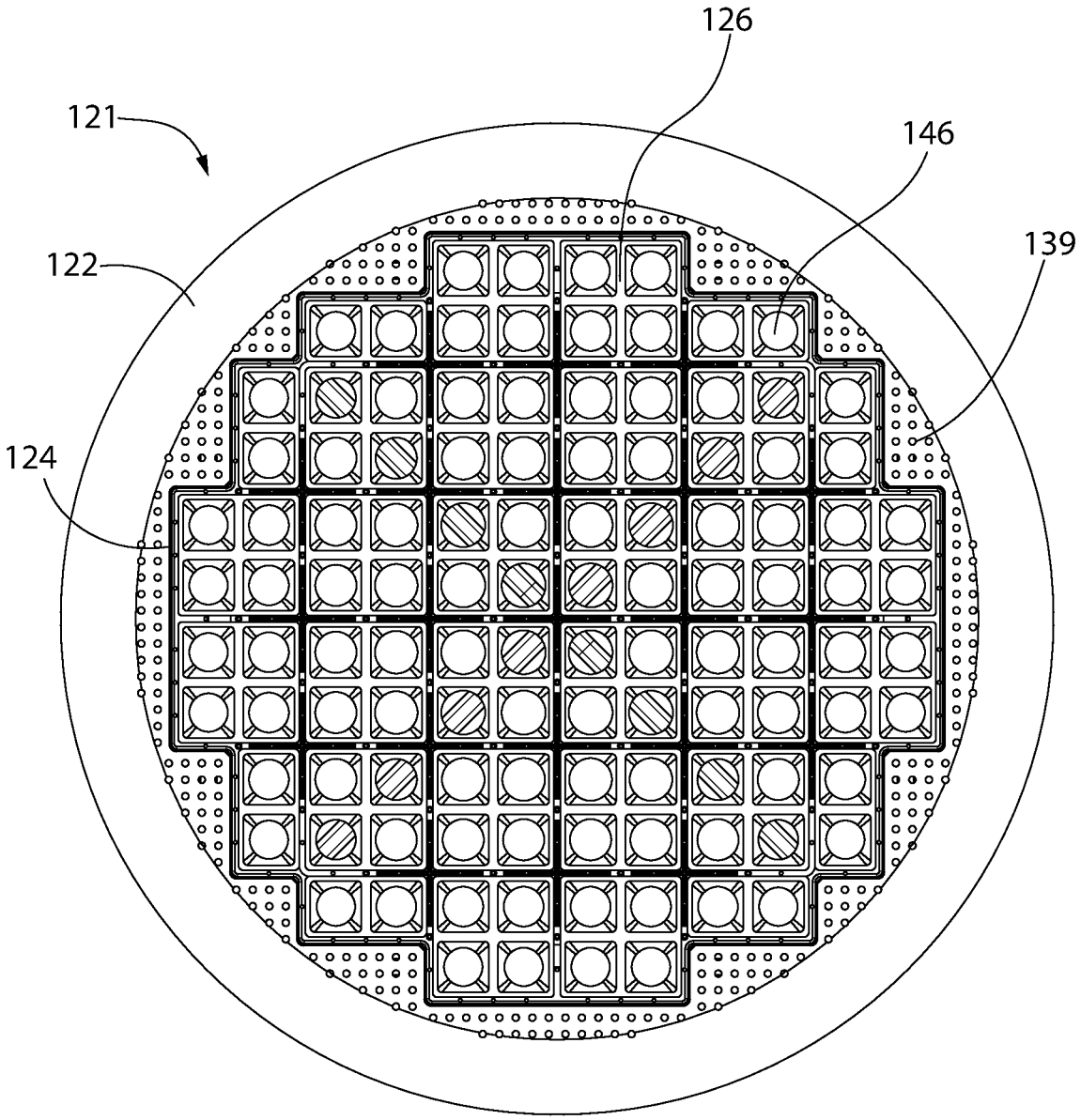

FIG. 9

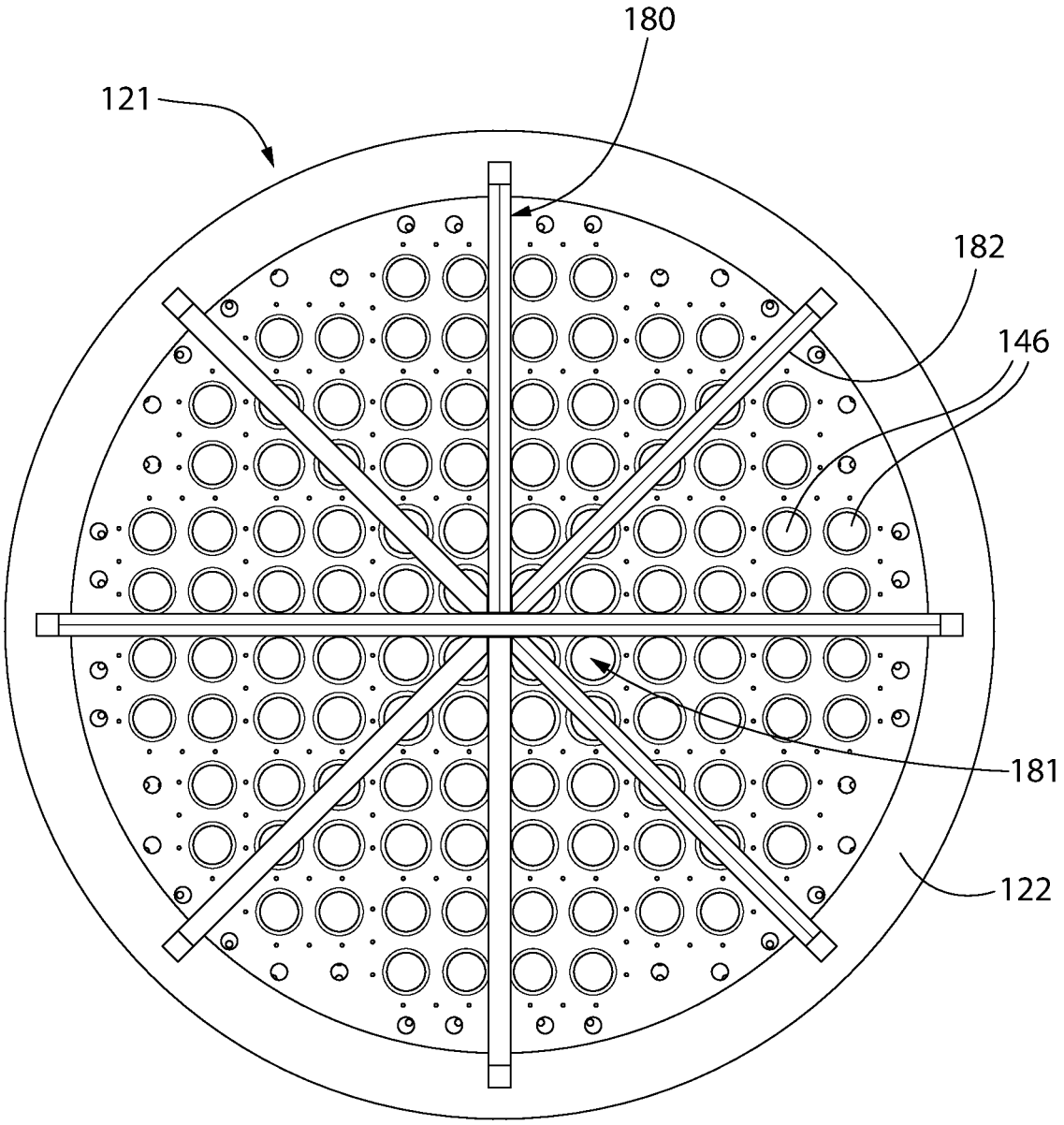

FIG. 10

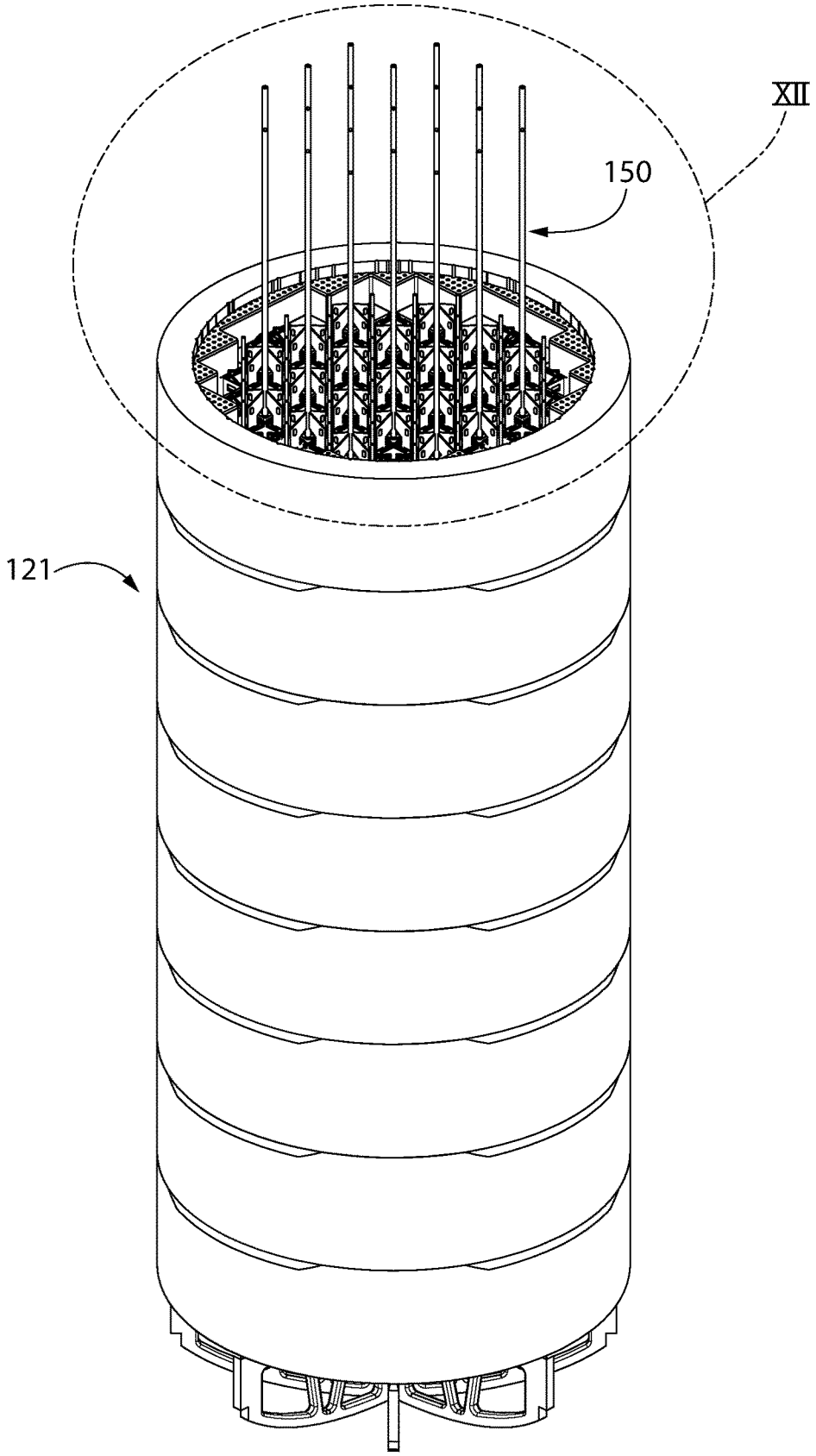

FIG. 11

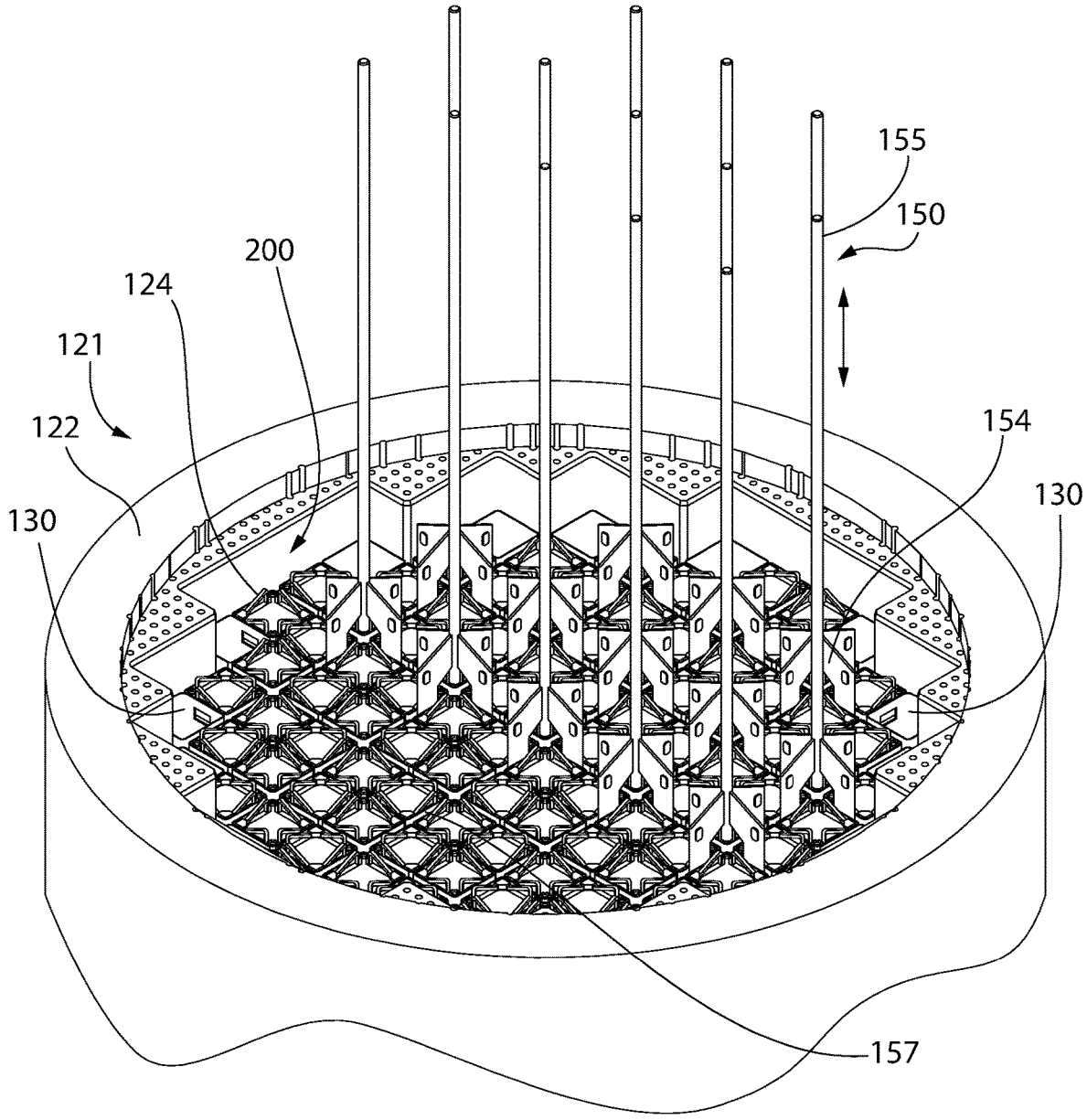

FIG. 12

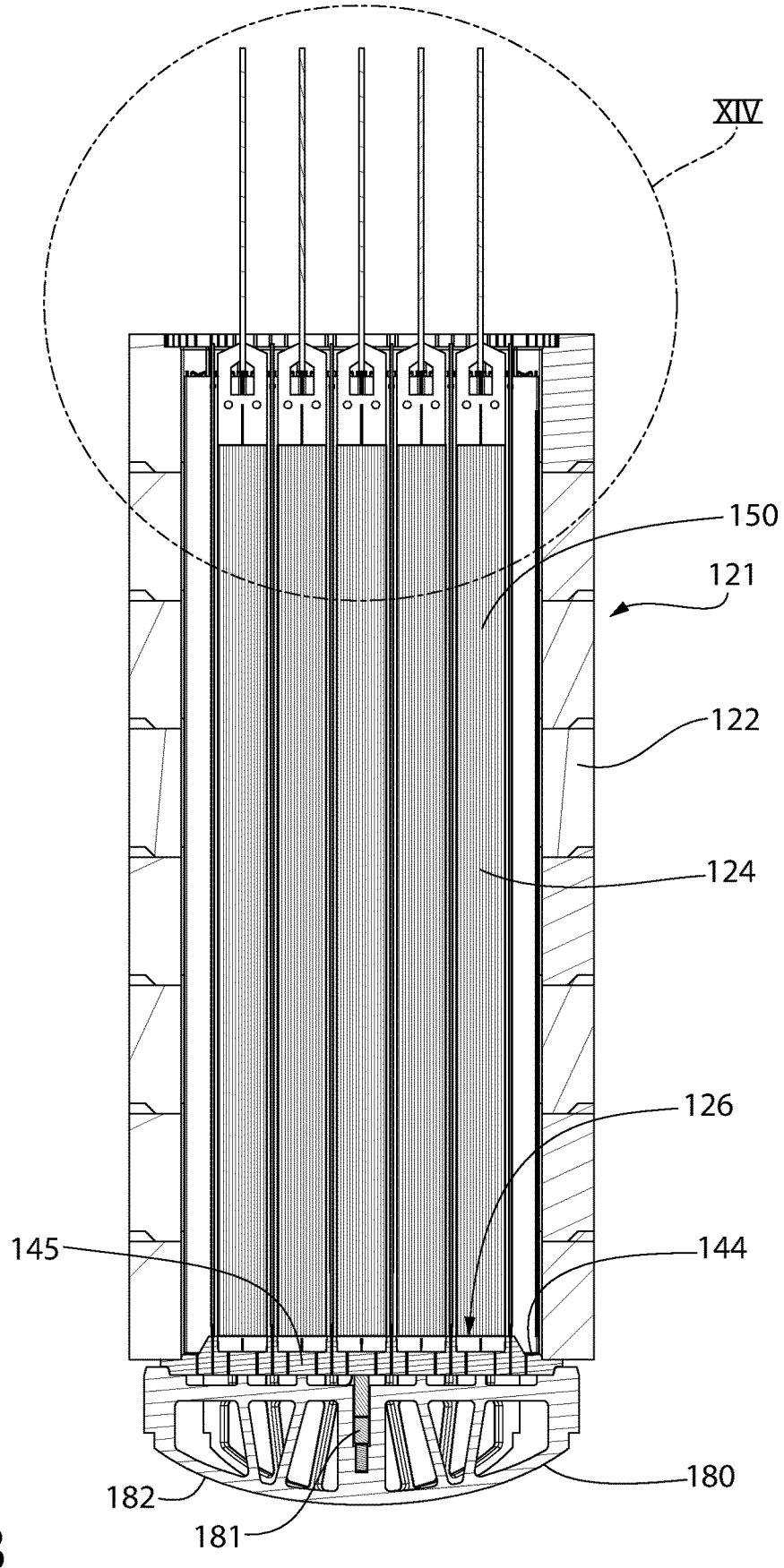

FIG. 13

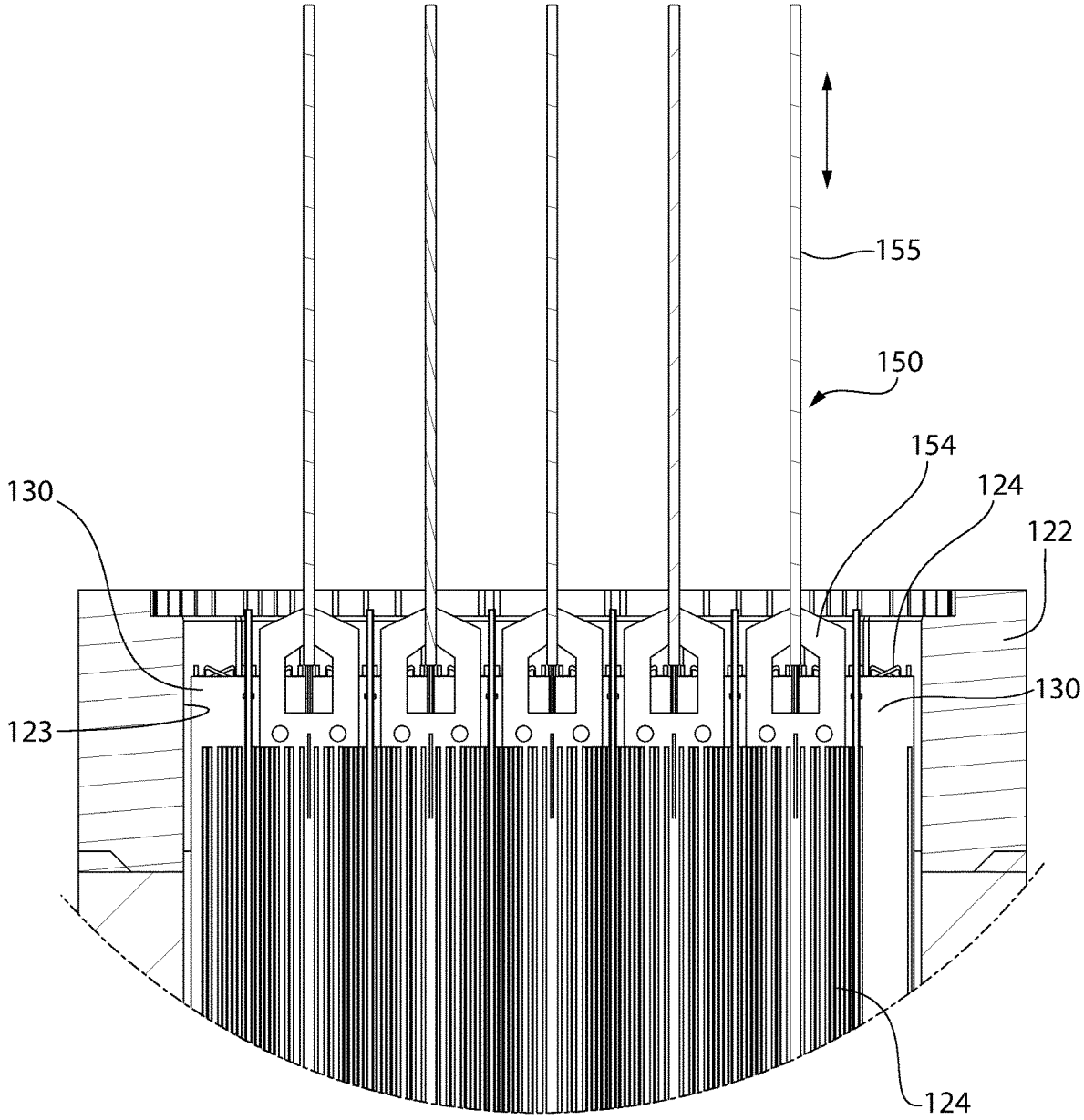

FIG. 14

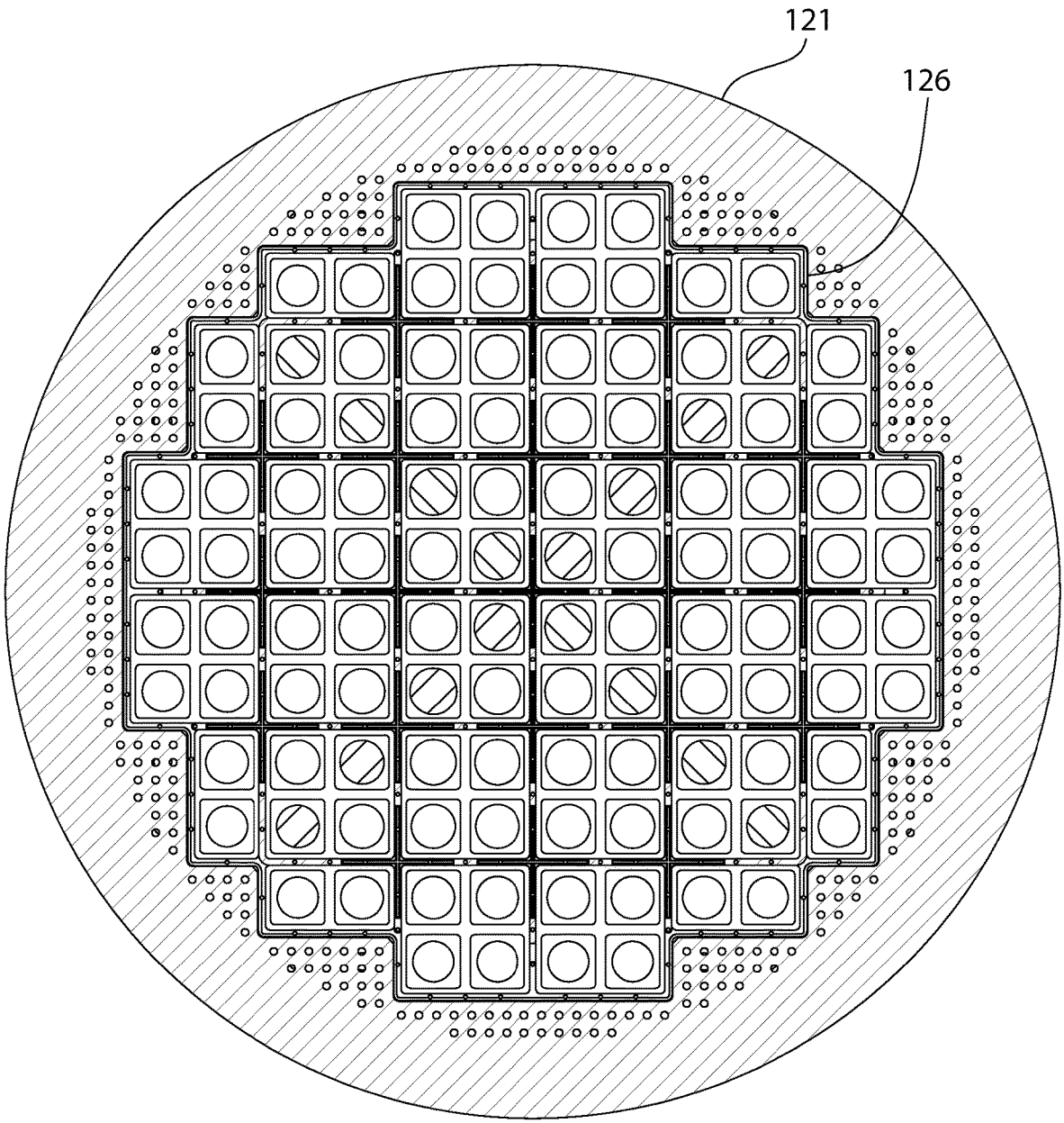

FIG. 15

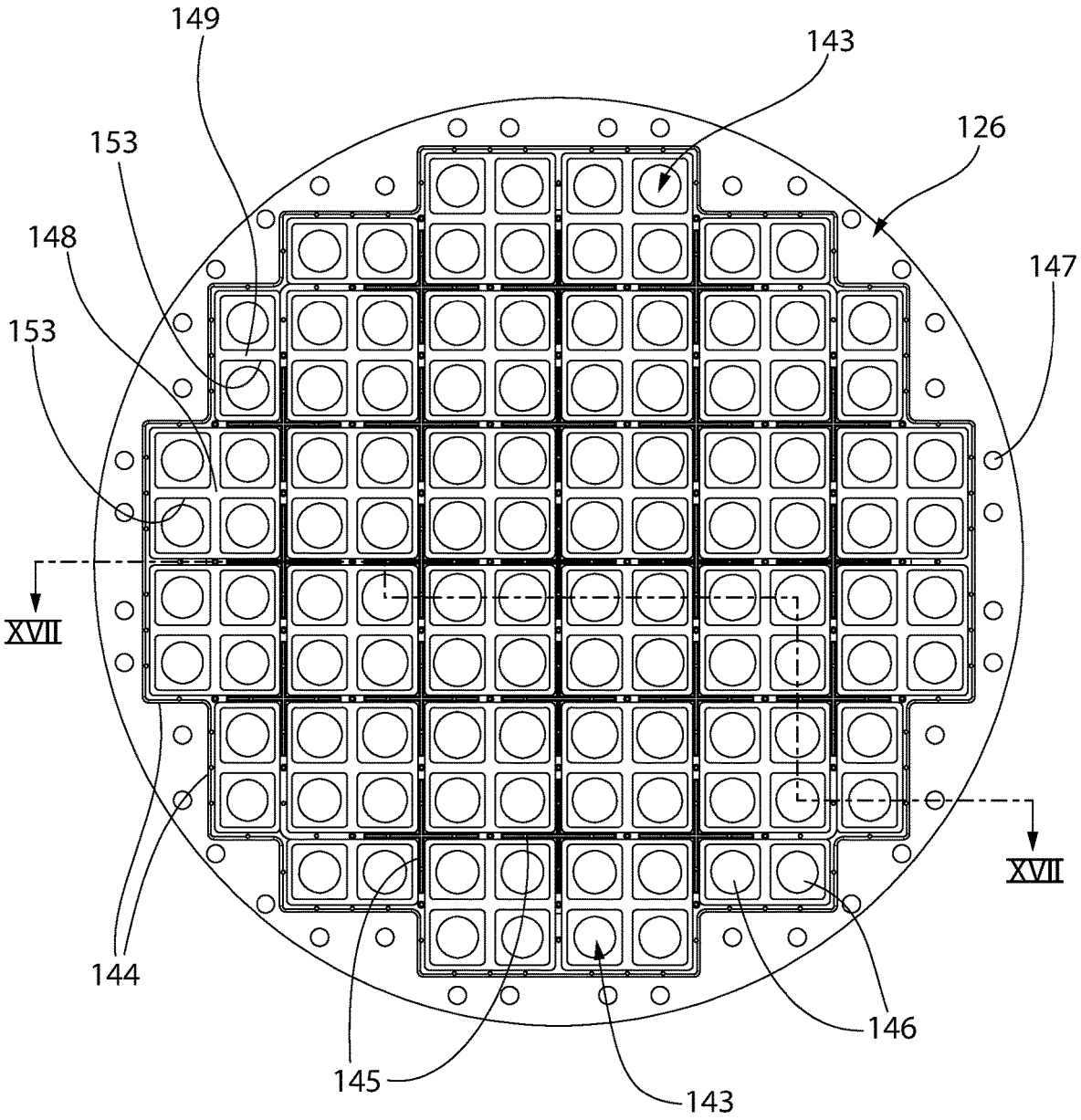

FIG. 16

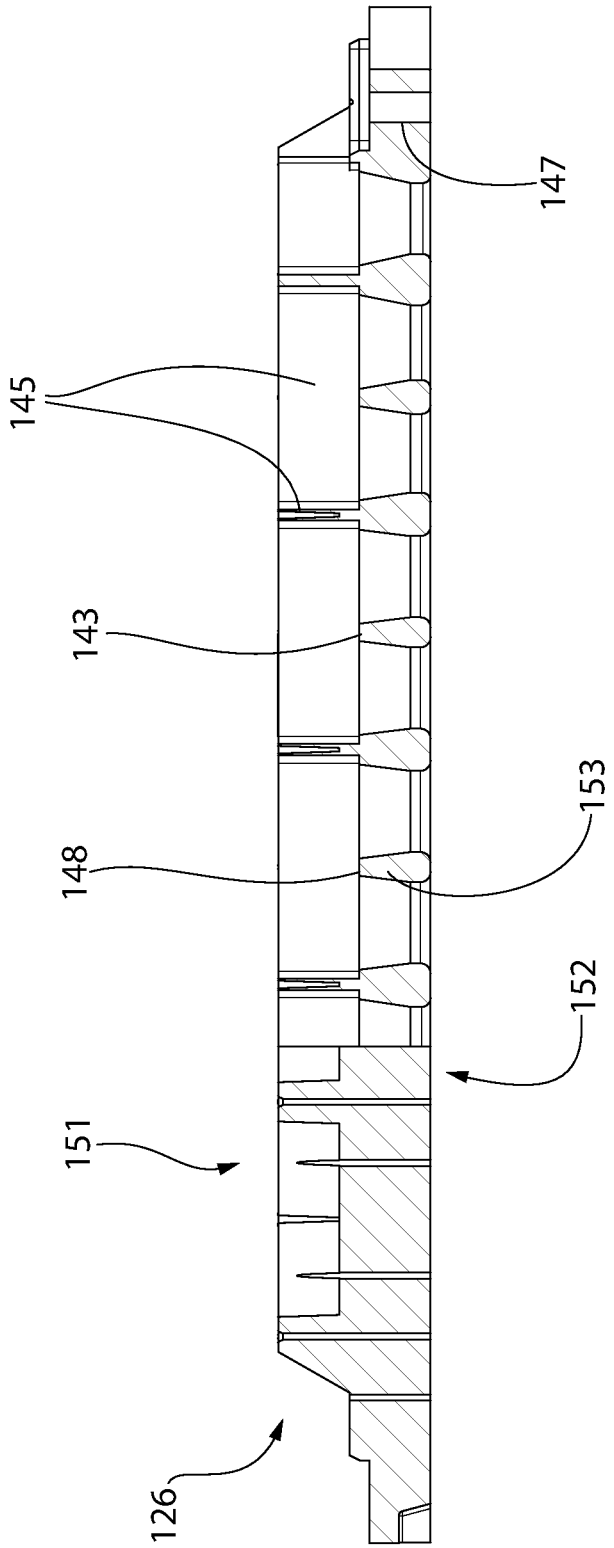

FIG. 17

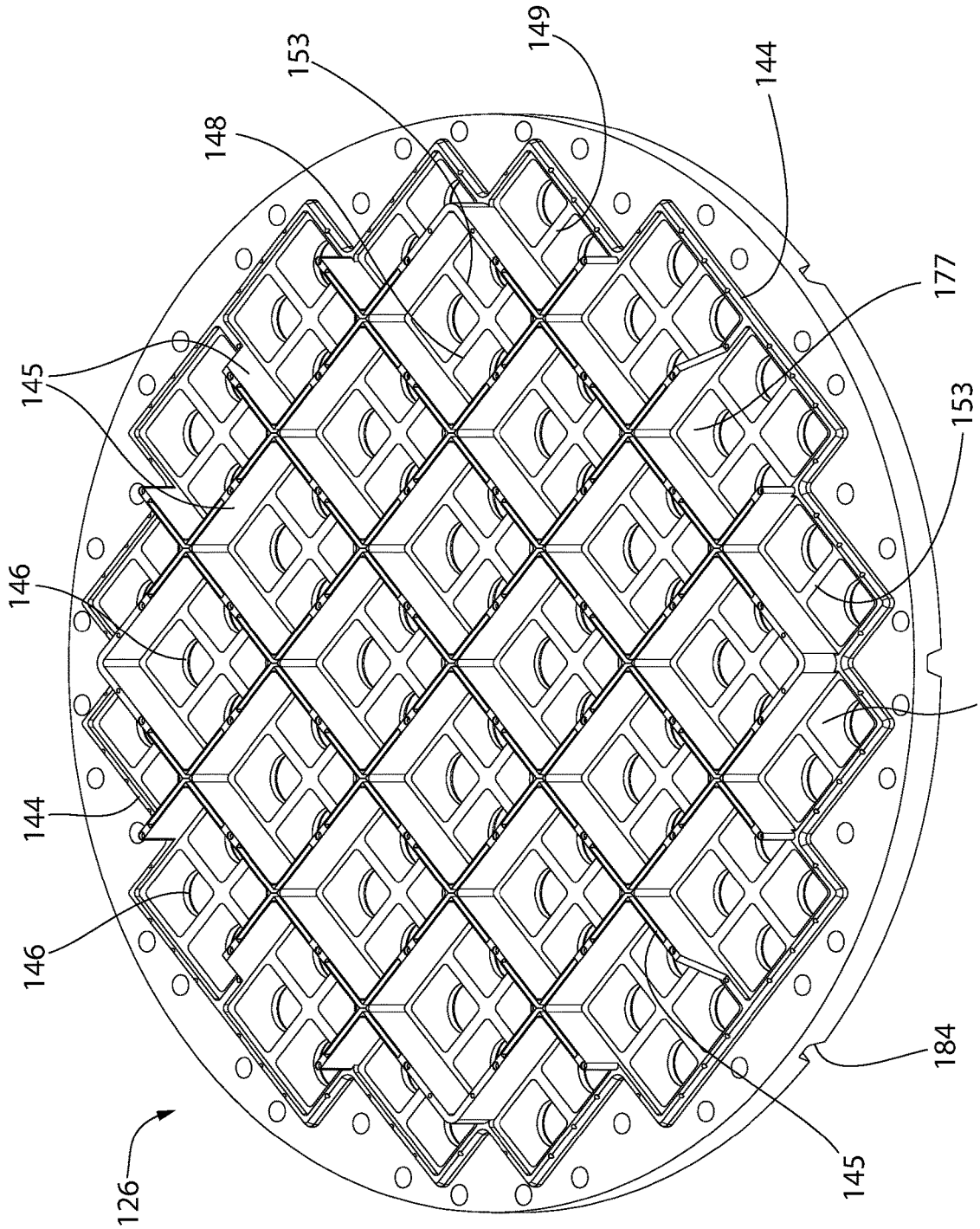

FIG. 18

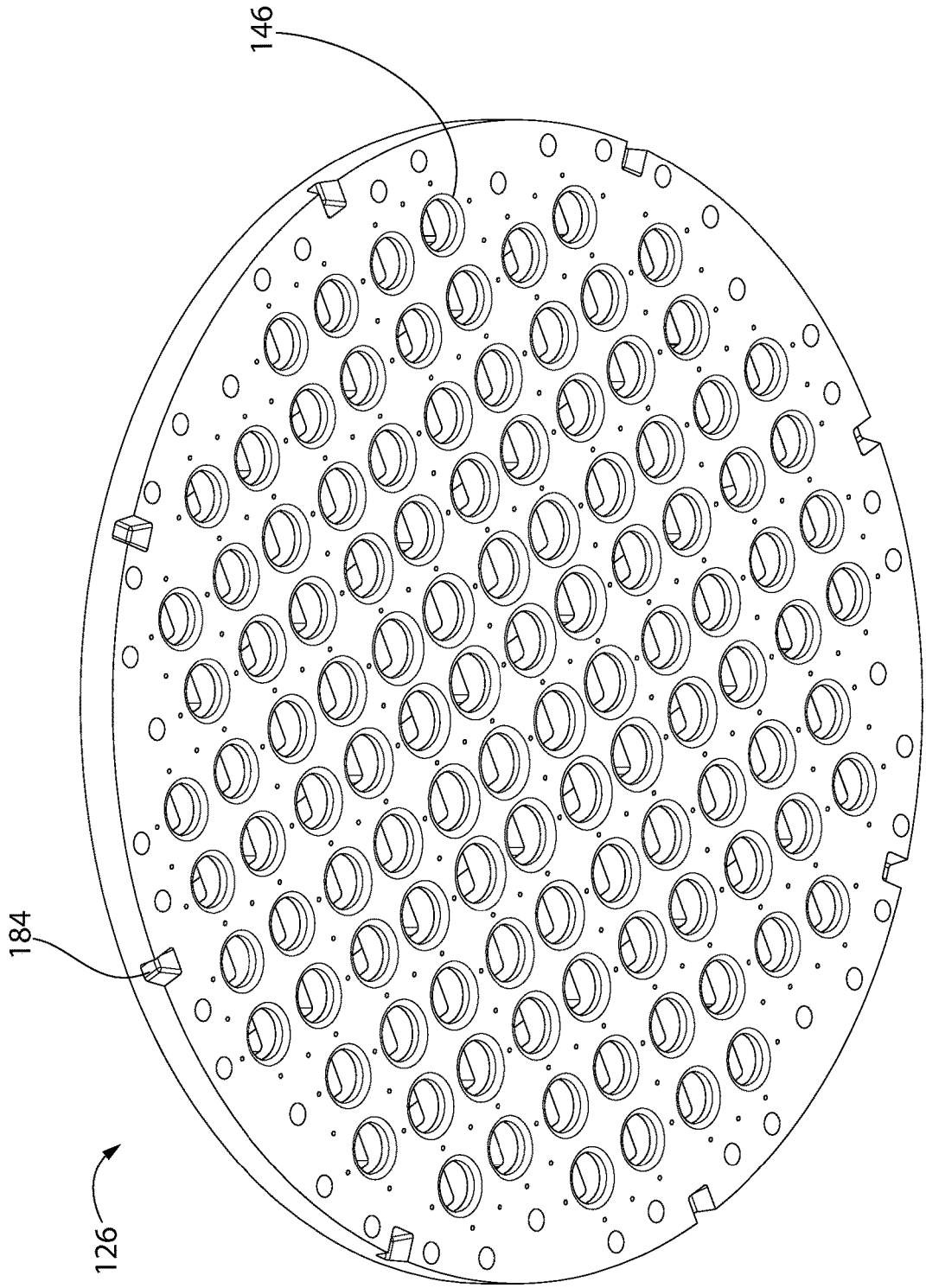

FIG. 19

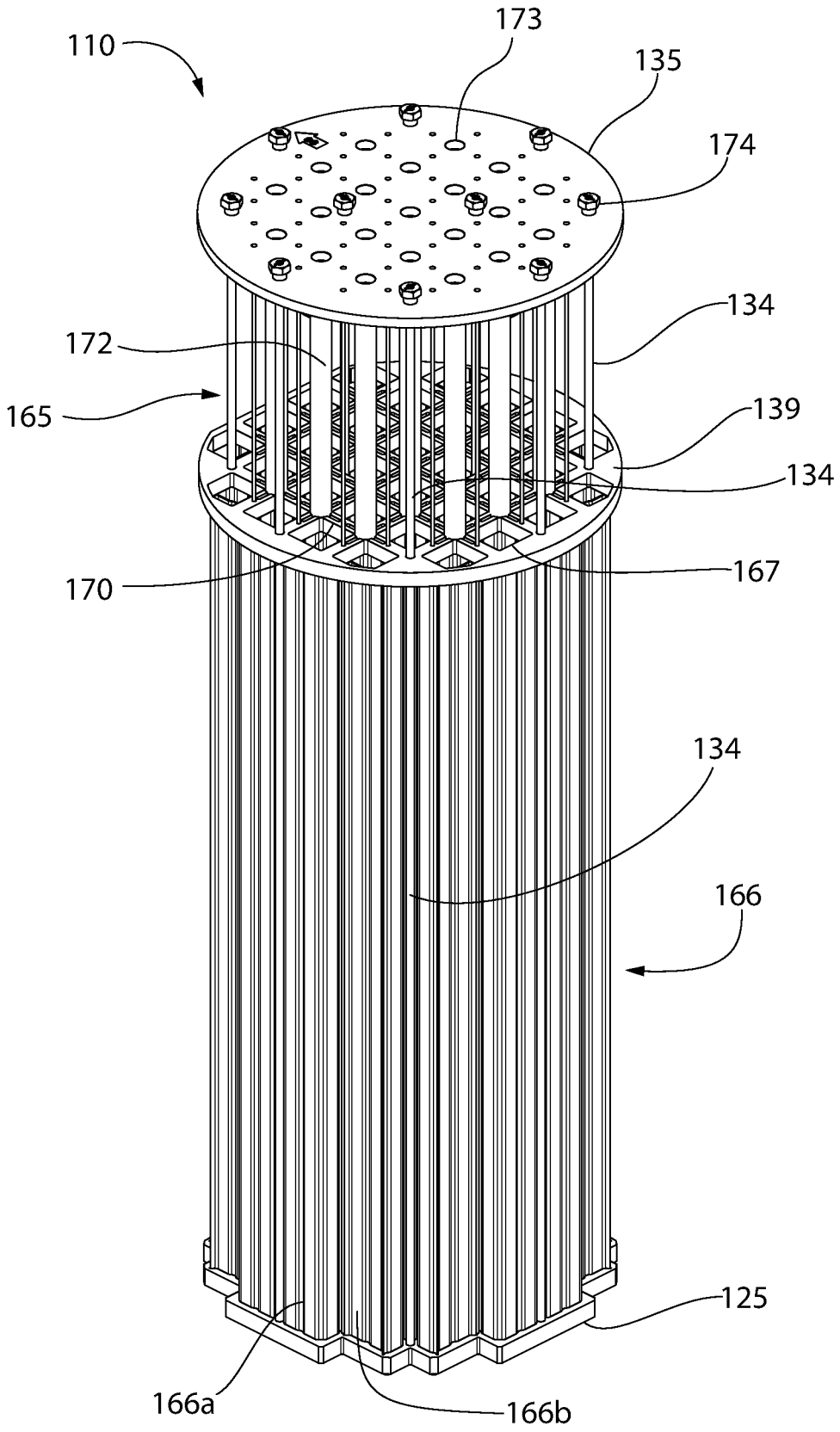
110
173
135
174
134
172
165
139
134
167
170
134
166
125
166a
166b

FIG. 20

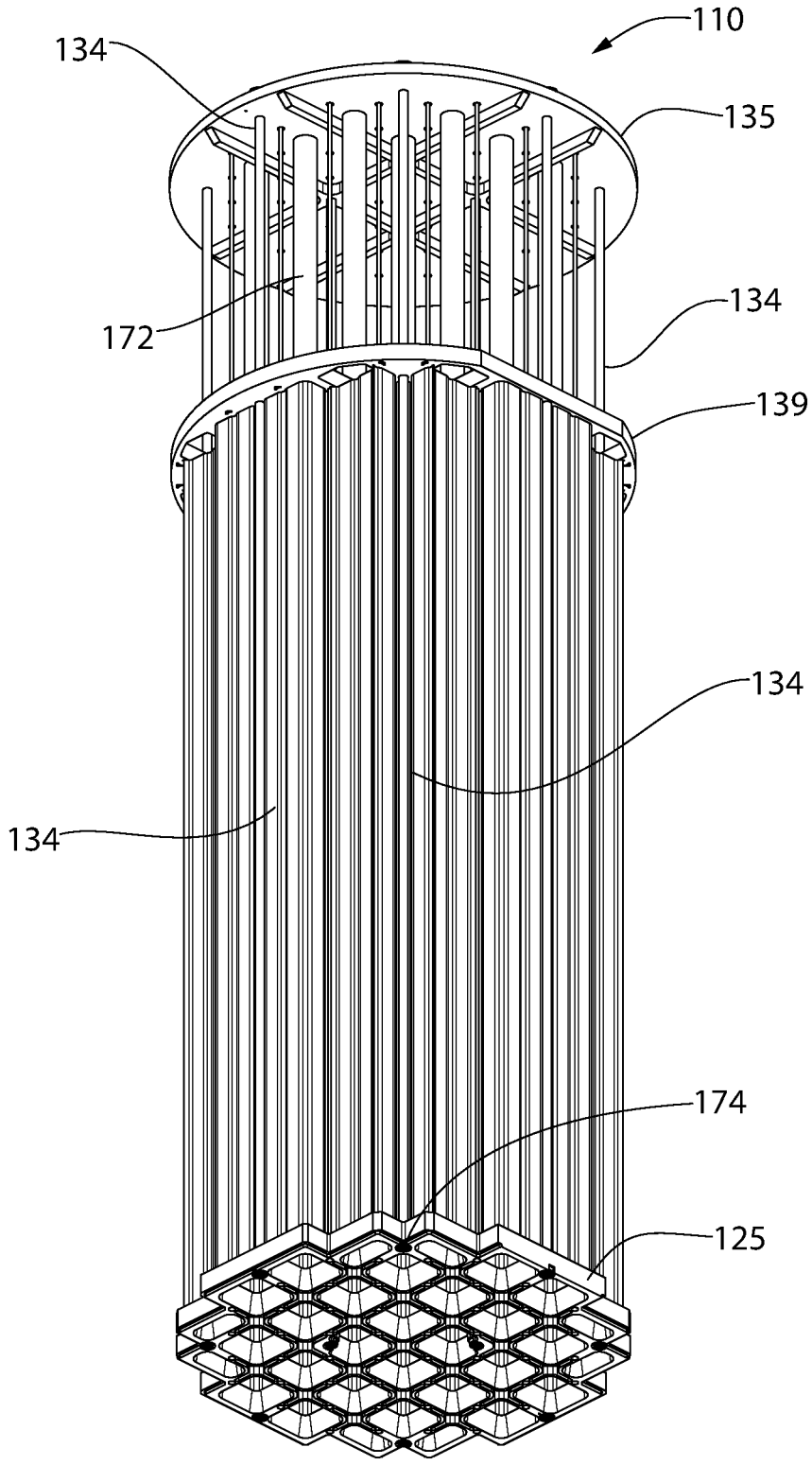

FIG. 21

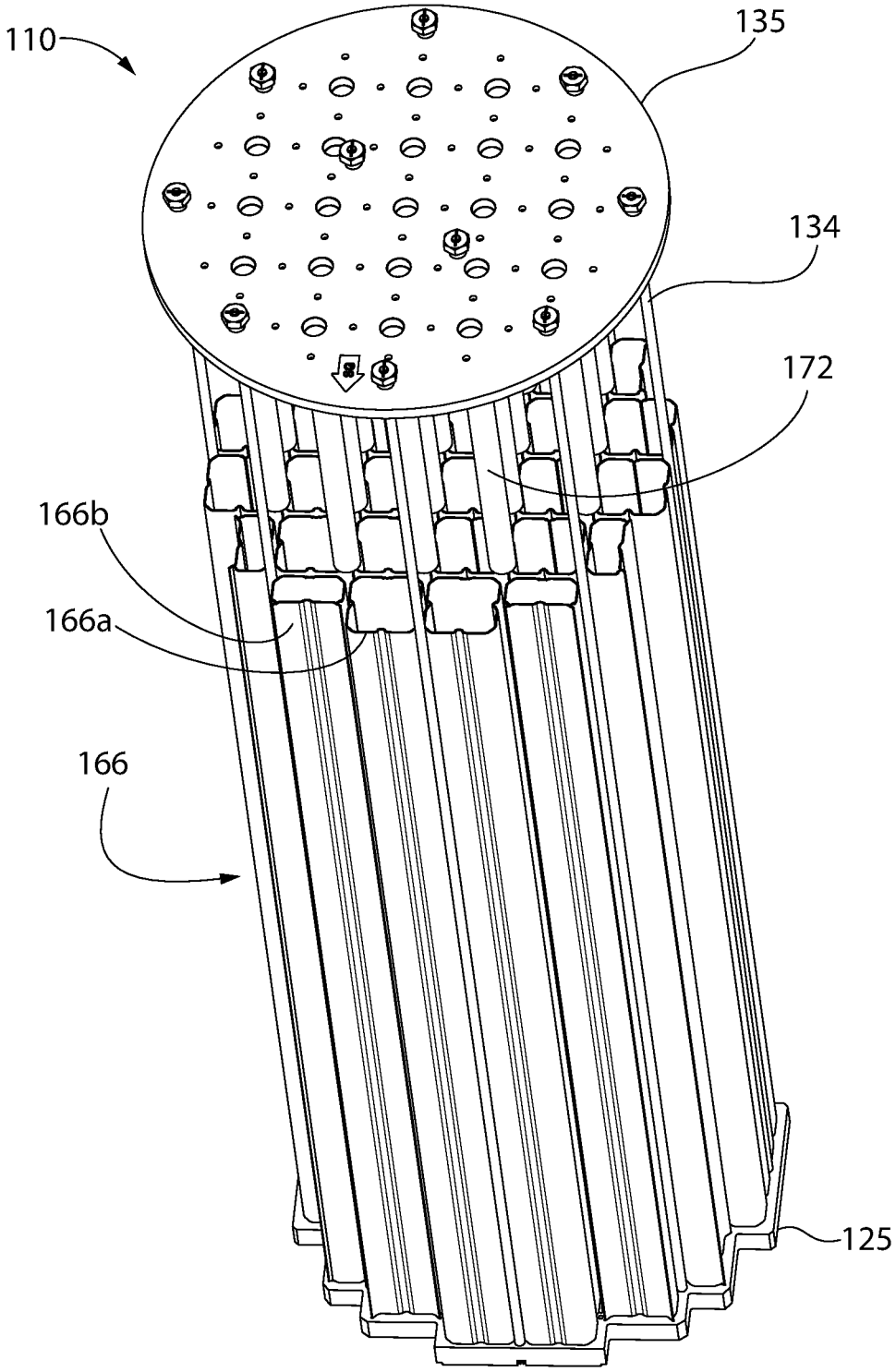

FIG. 22

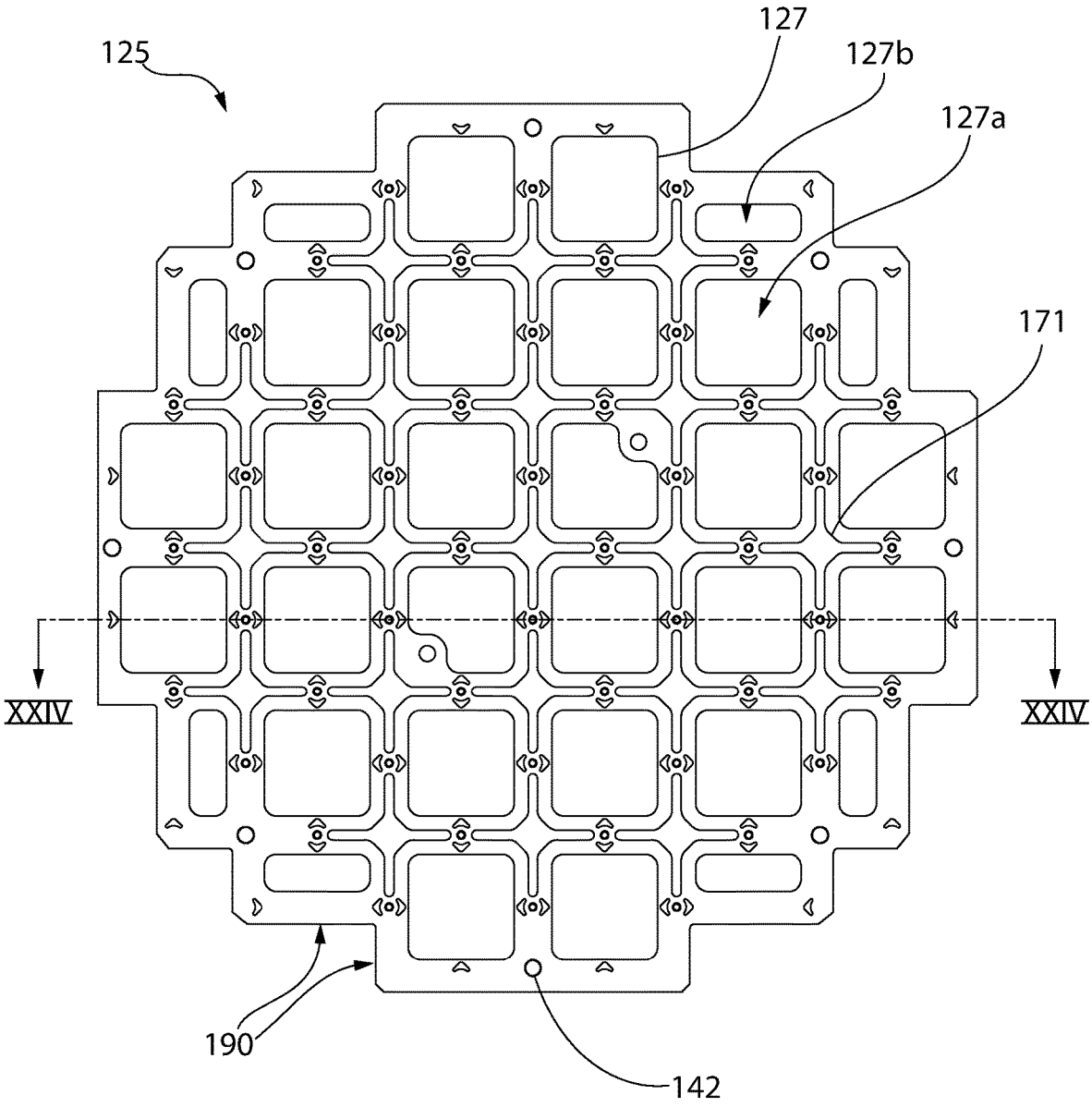

FIG. 23

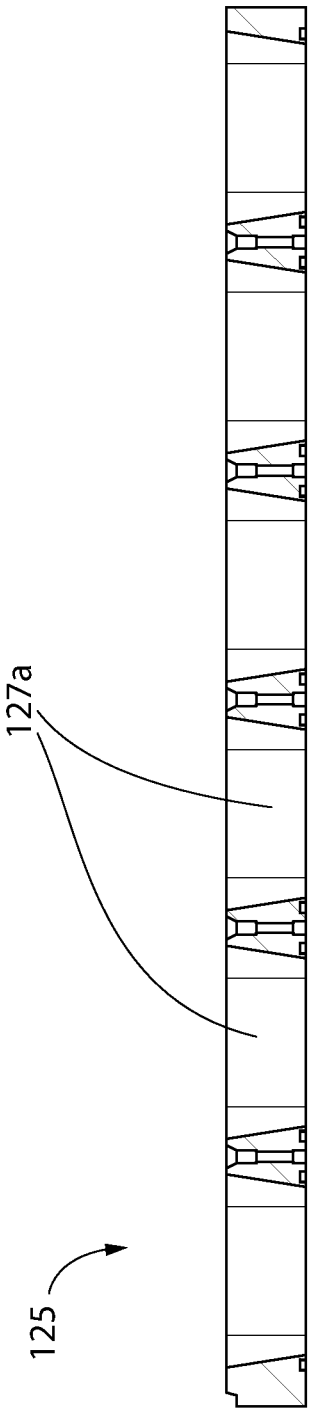

FIG. 24

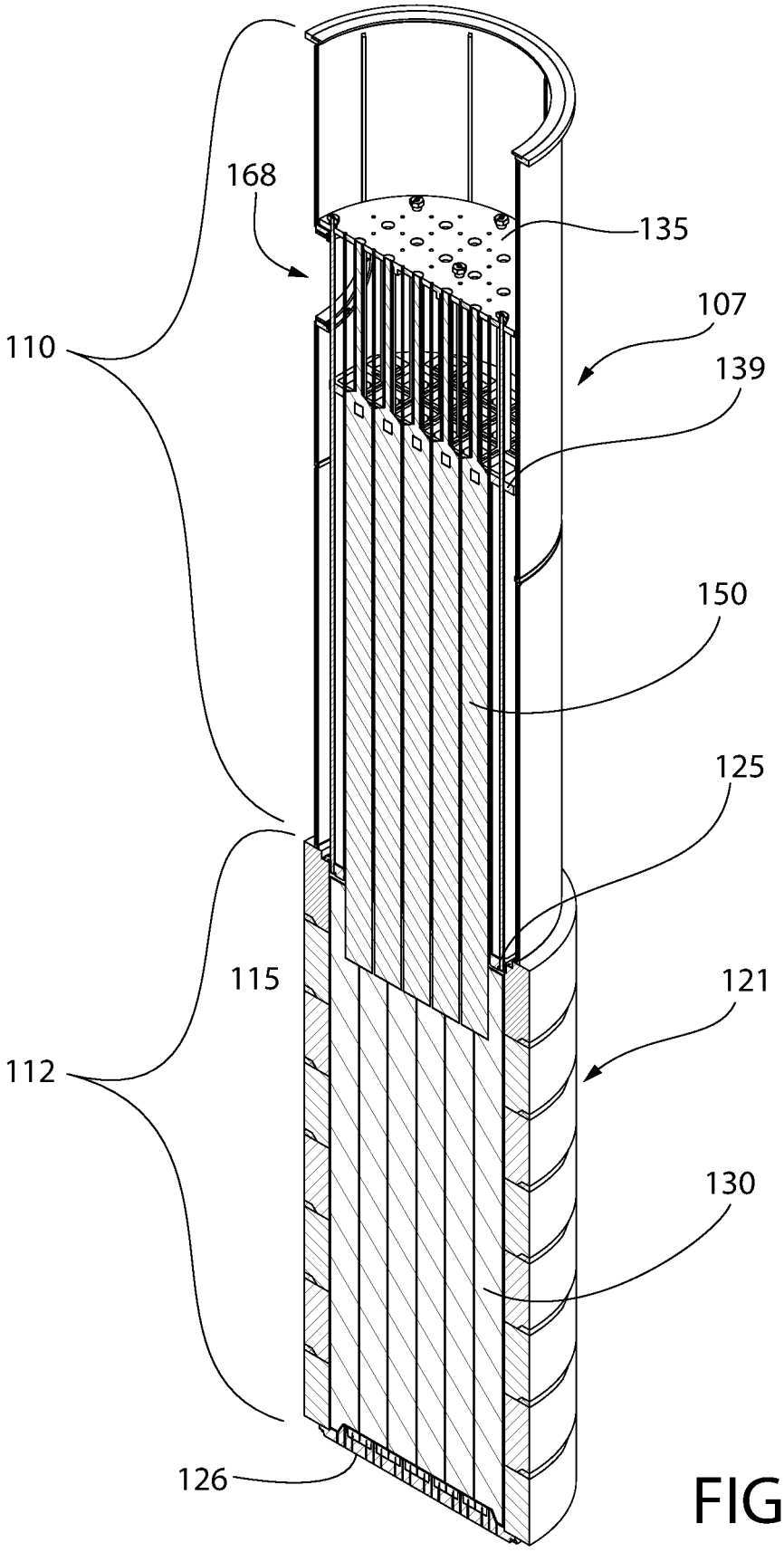

FIG. 25

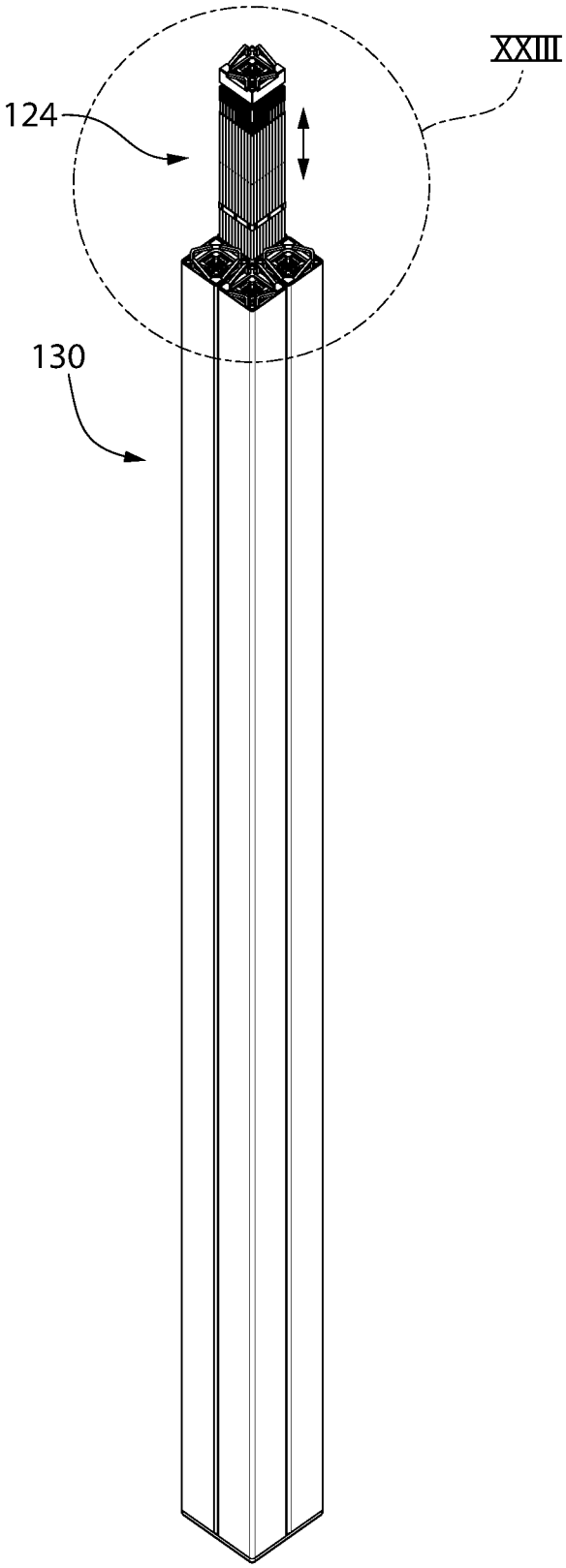

FIG. 26

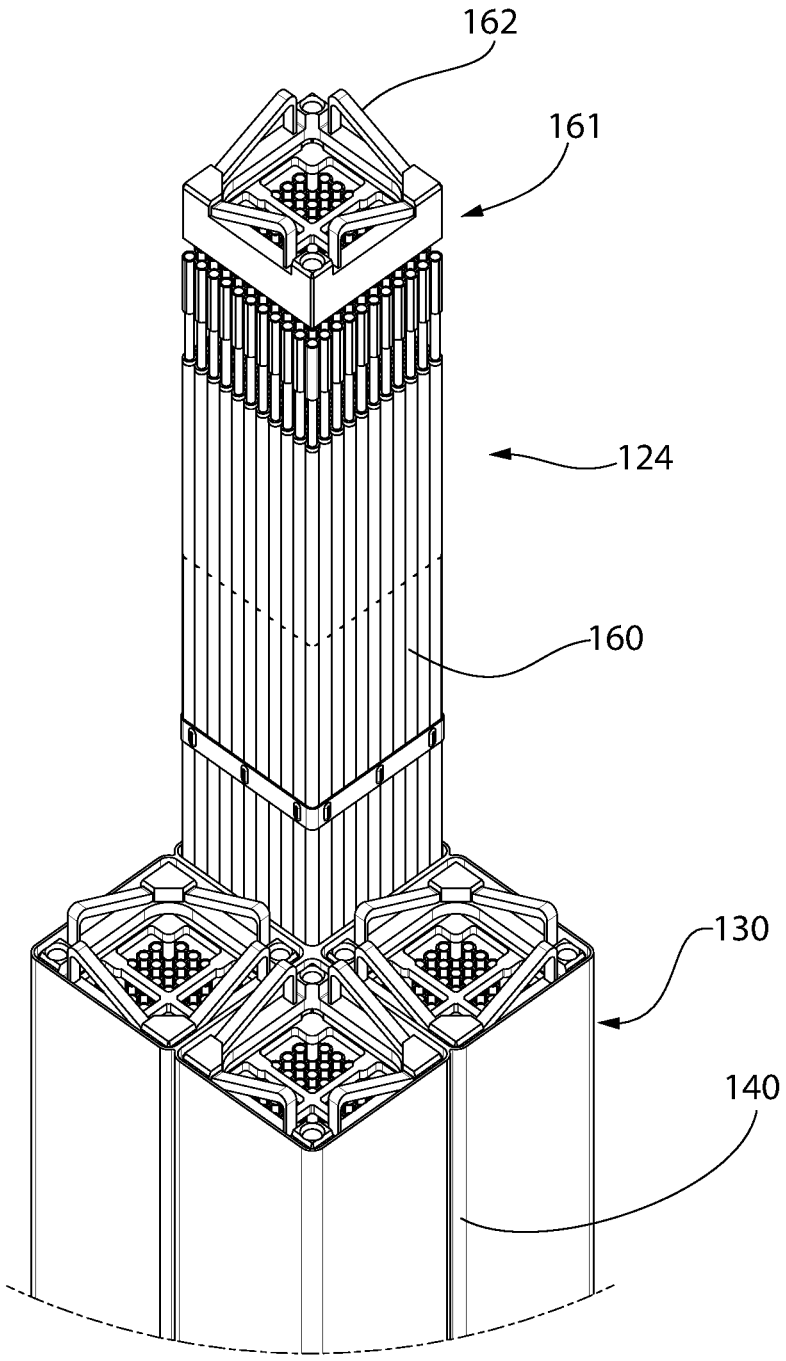

FIG. 27

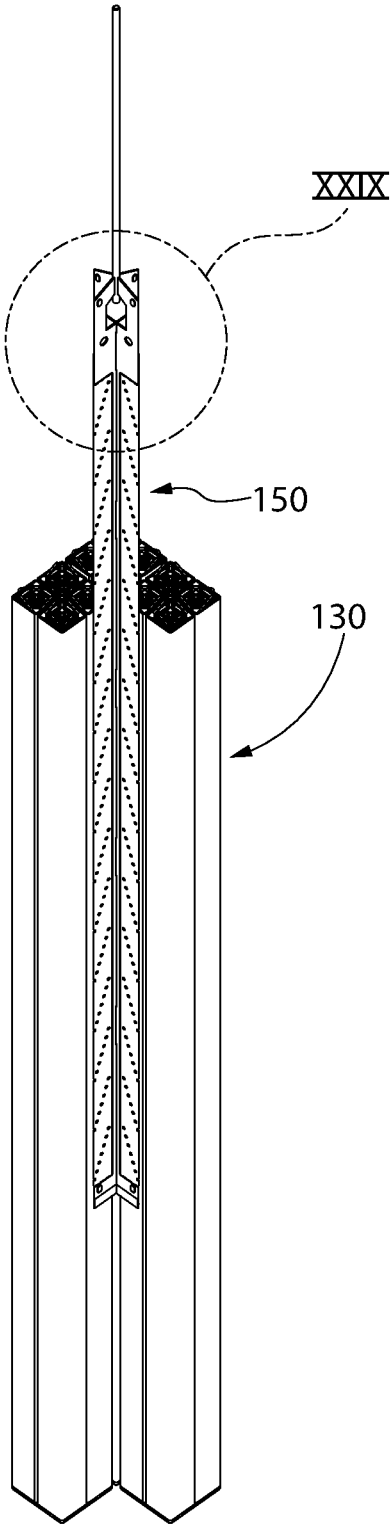

FIG. 28

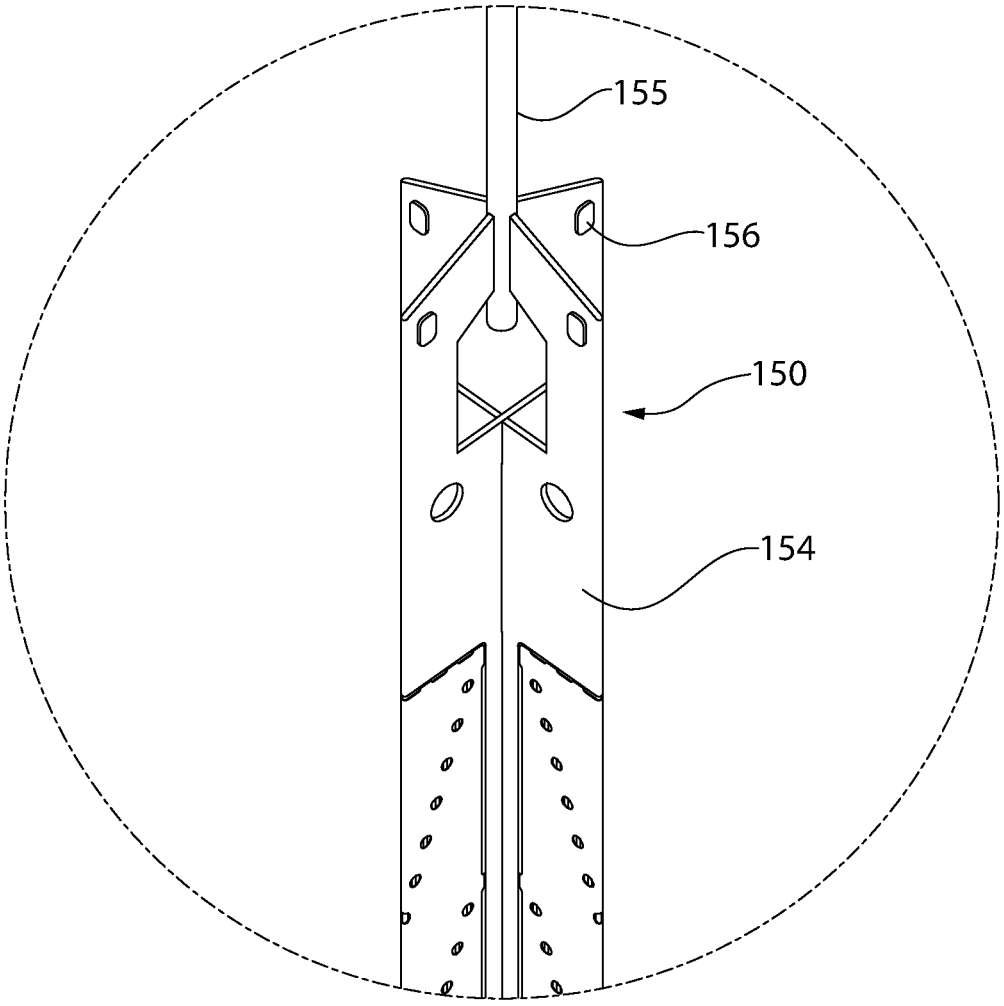

FIG. 29

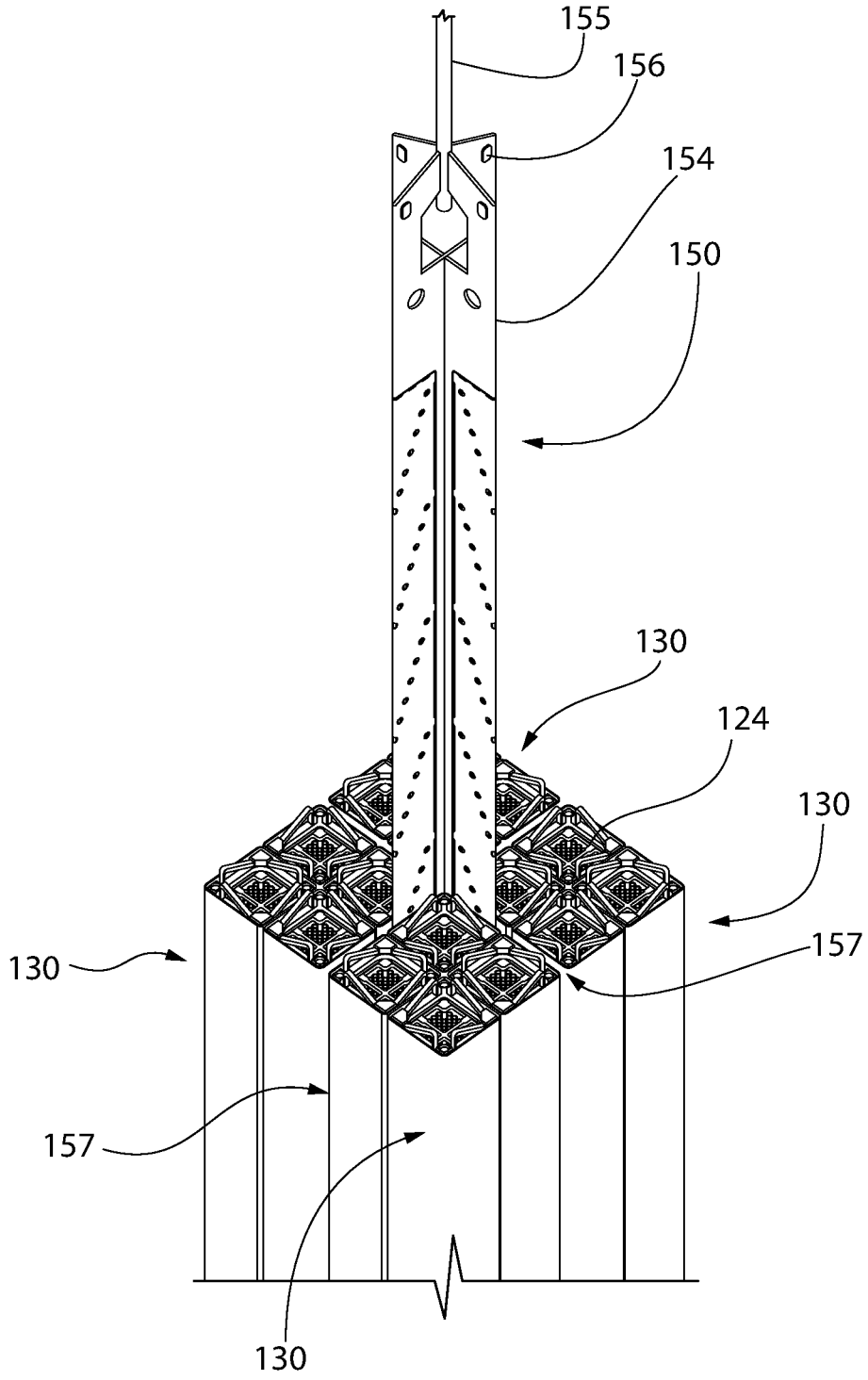

FIG. 30

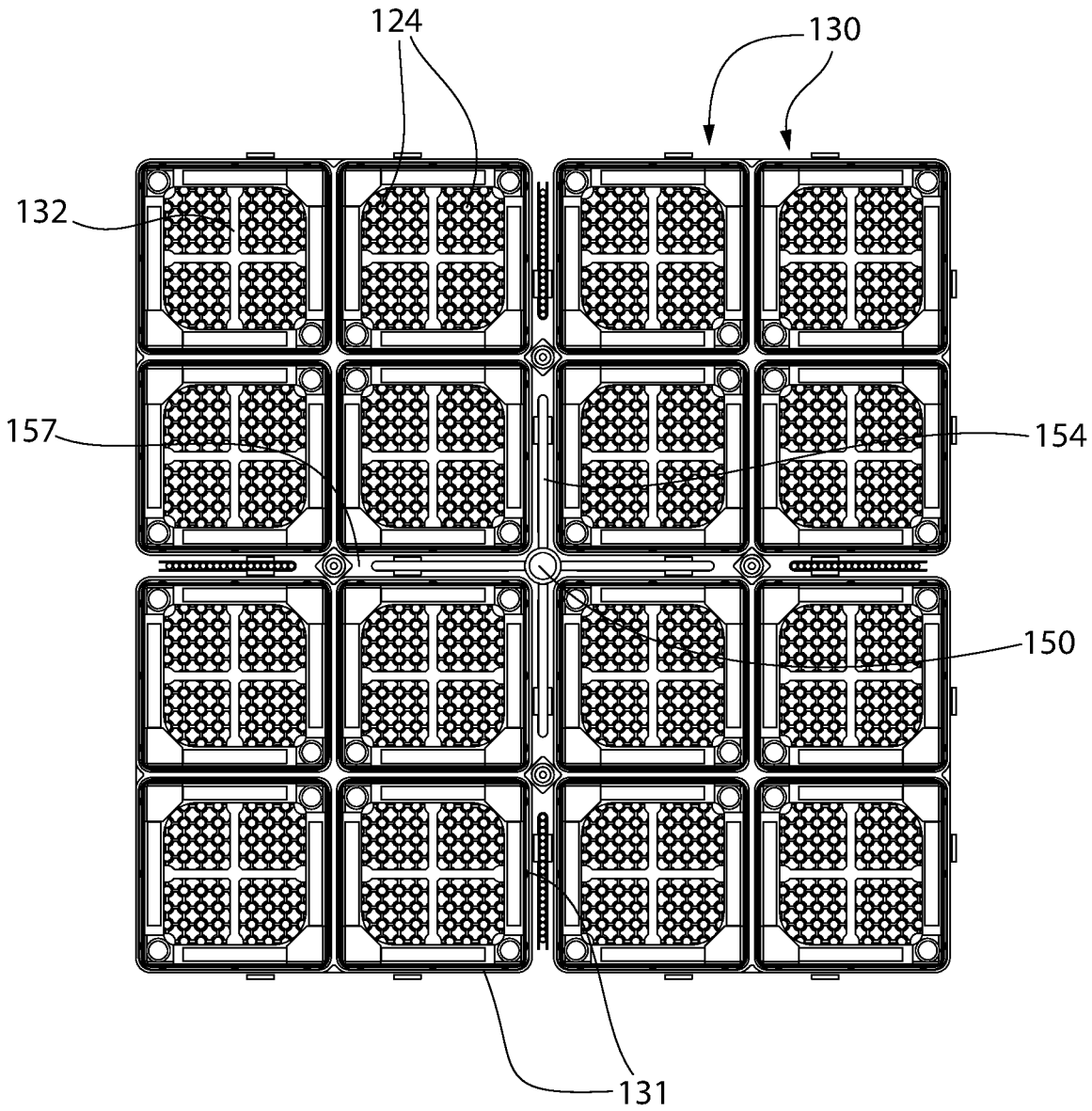

FIG. 31

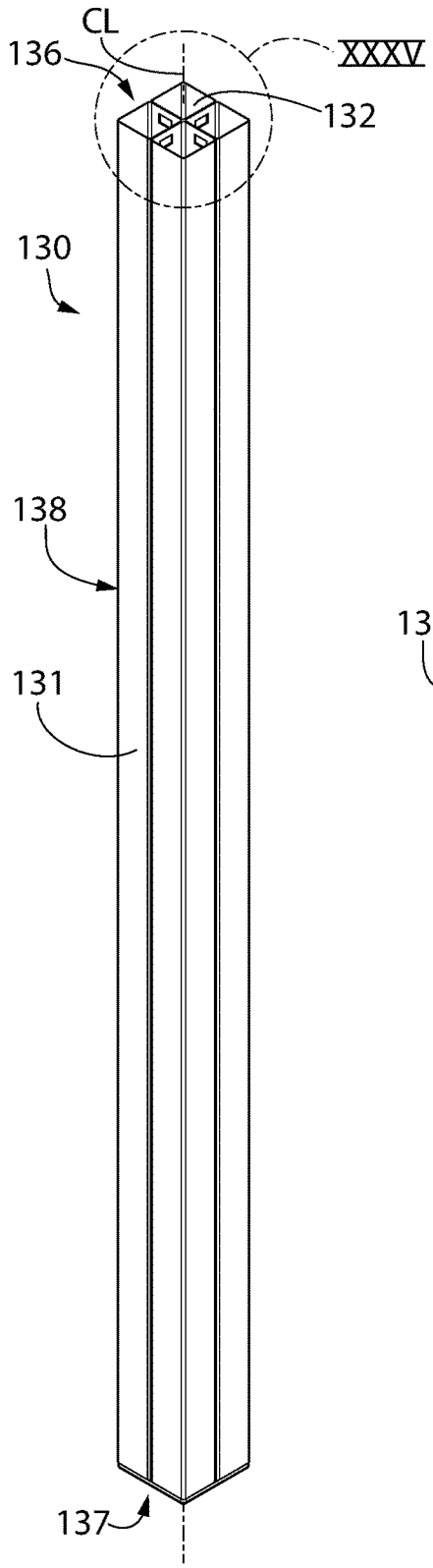

FIG. 32

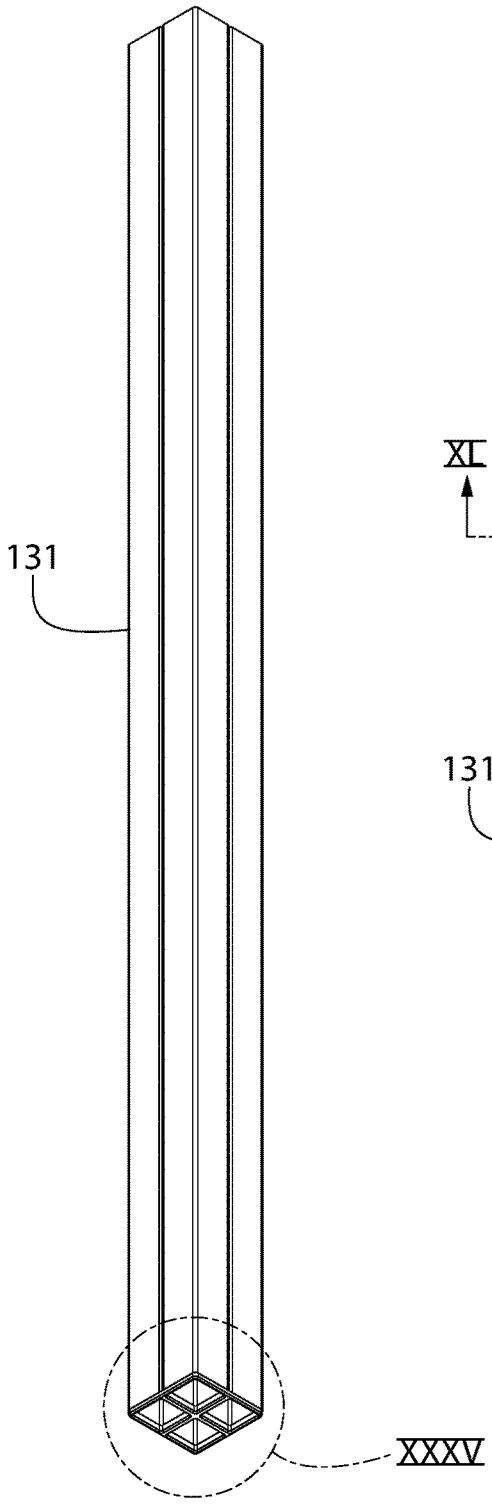

FIG. 33

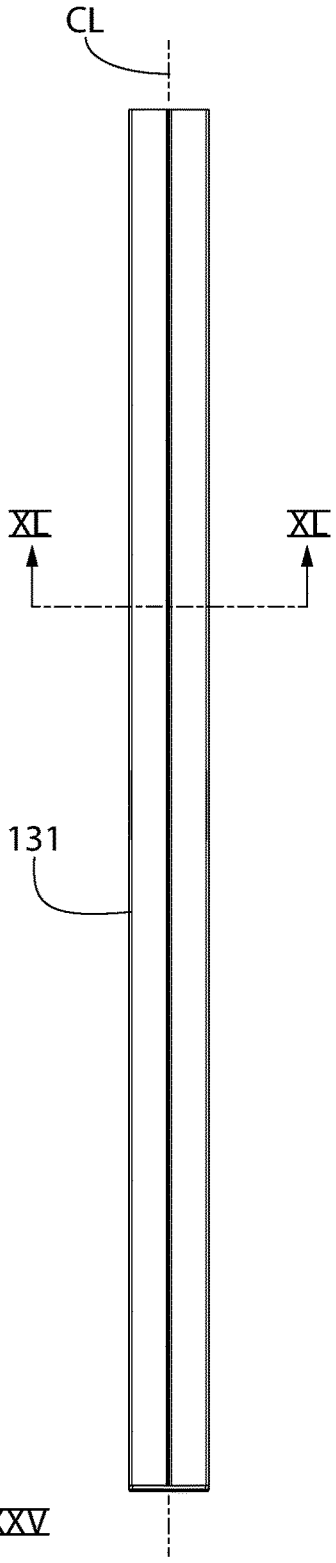

FIG. 34

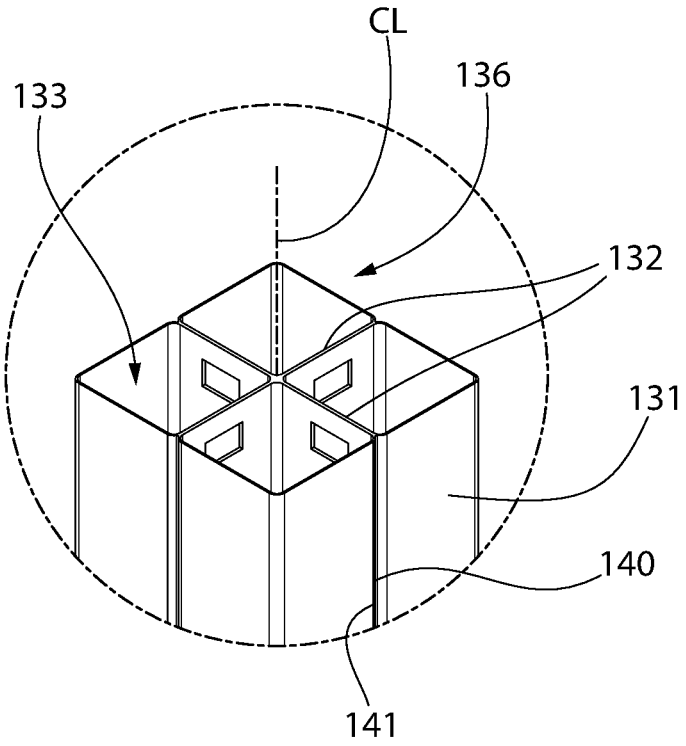

FIG. 35

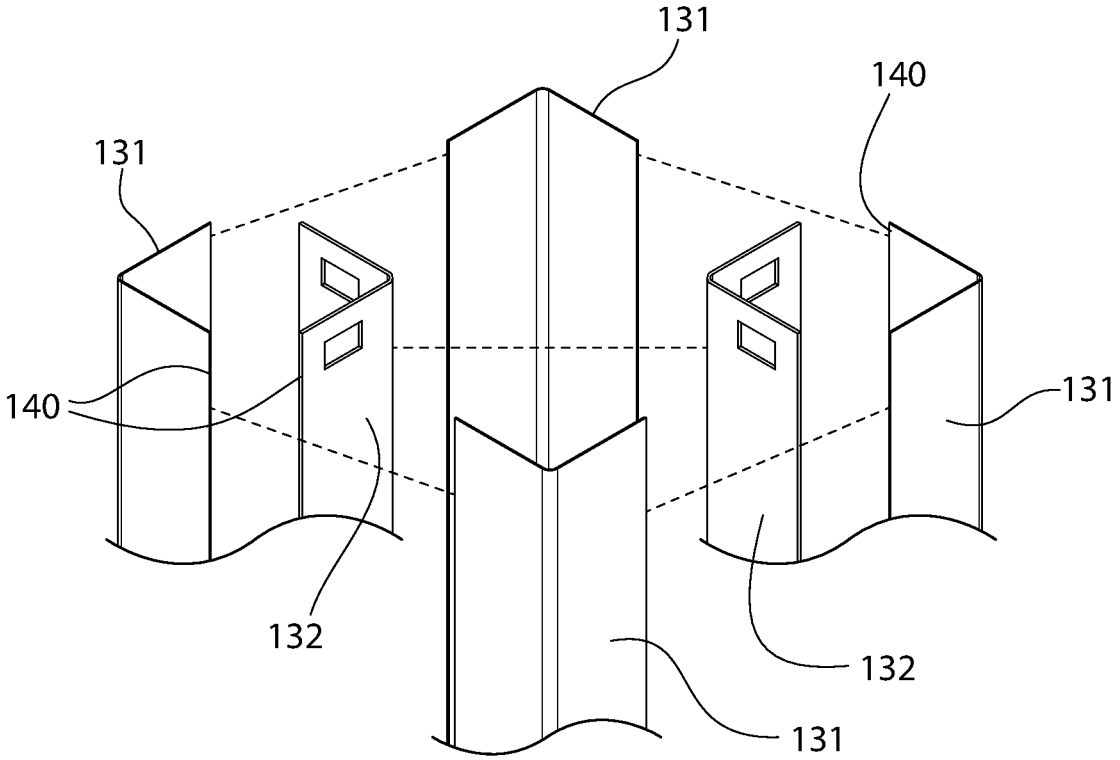

FIG. 36

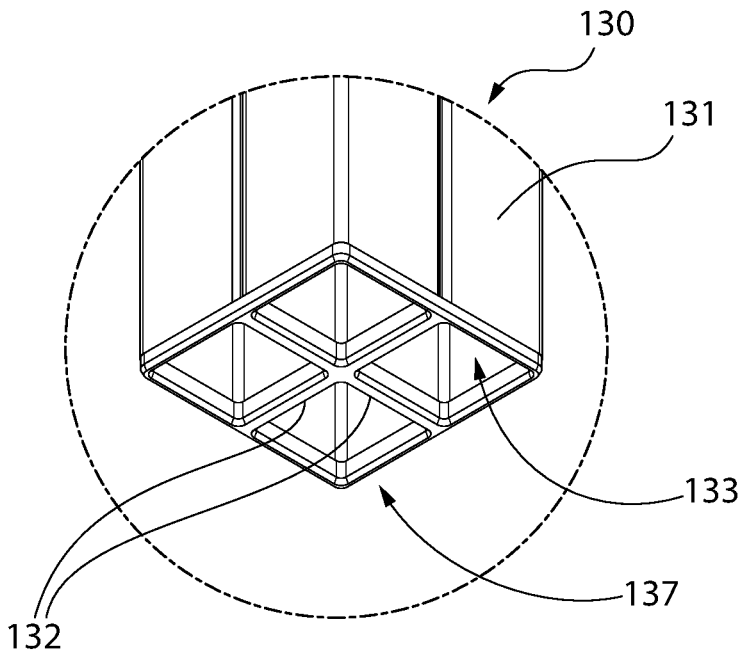

FIG. 37

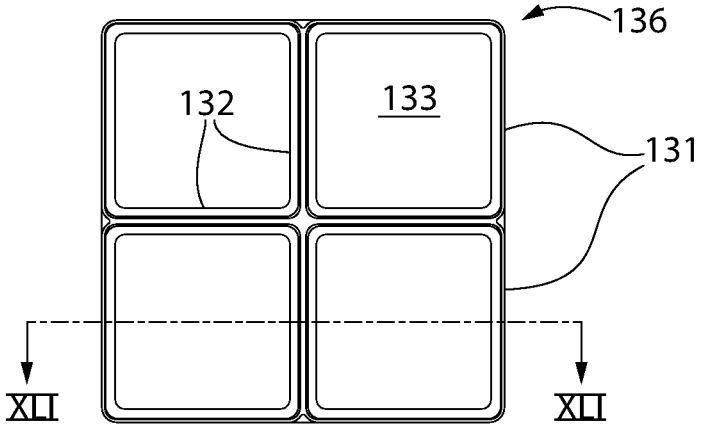

FIG. 38

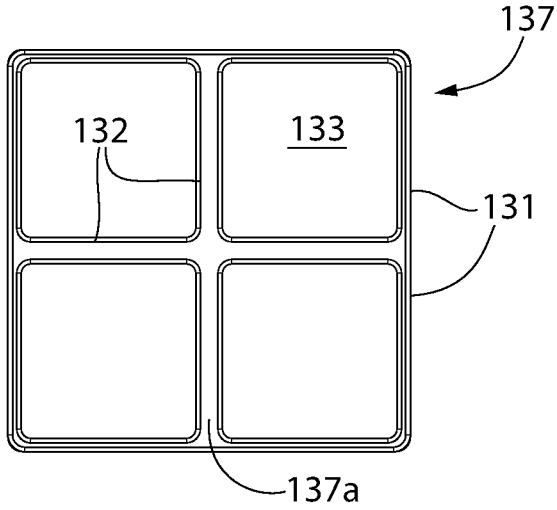

FIG. 39

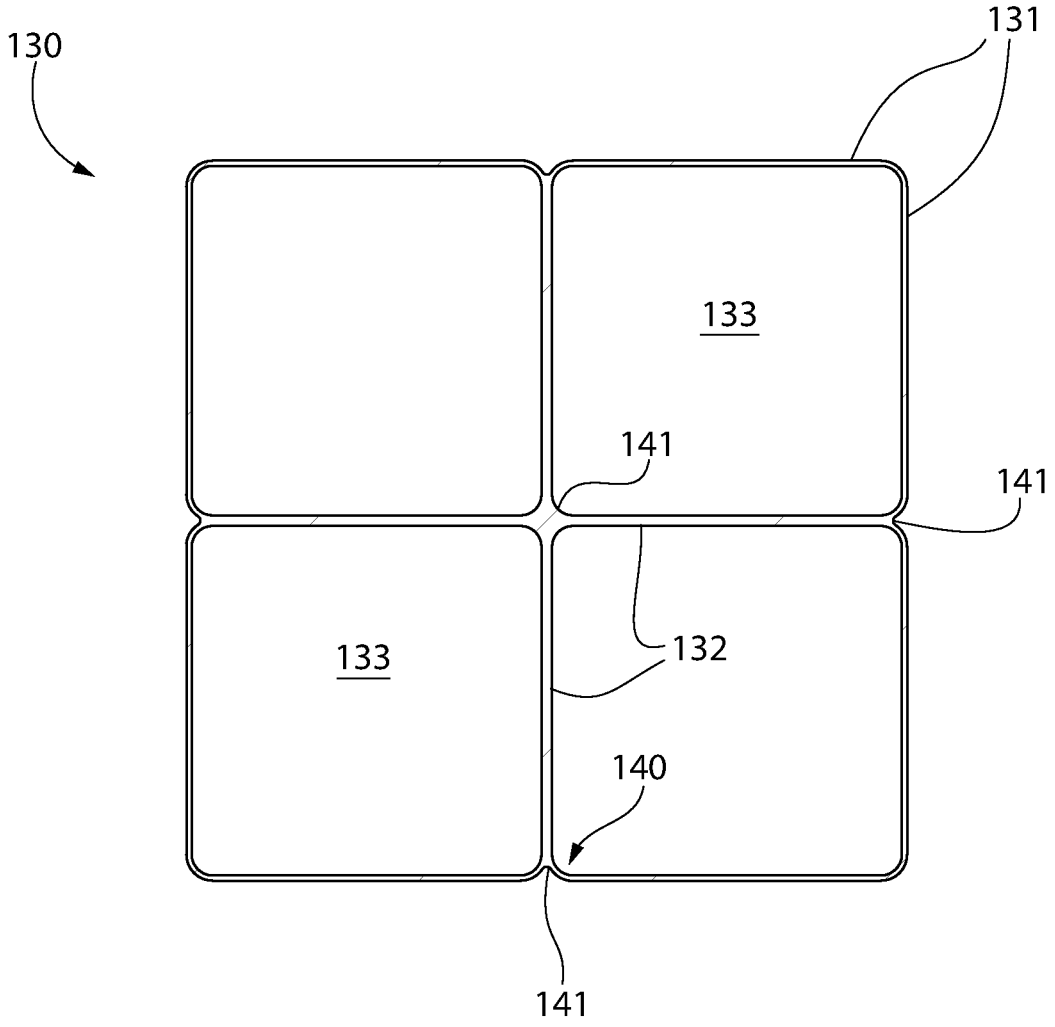

FIG. 40

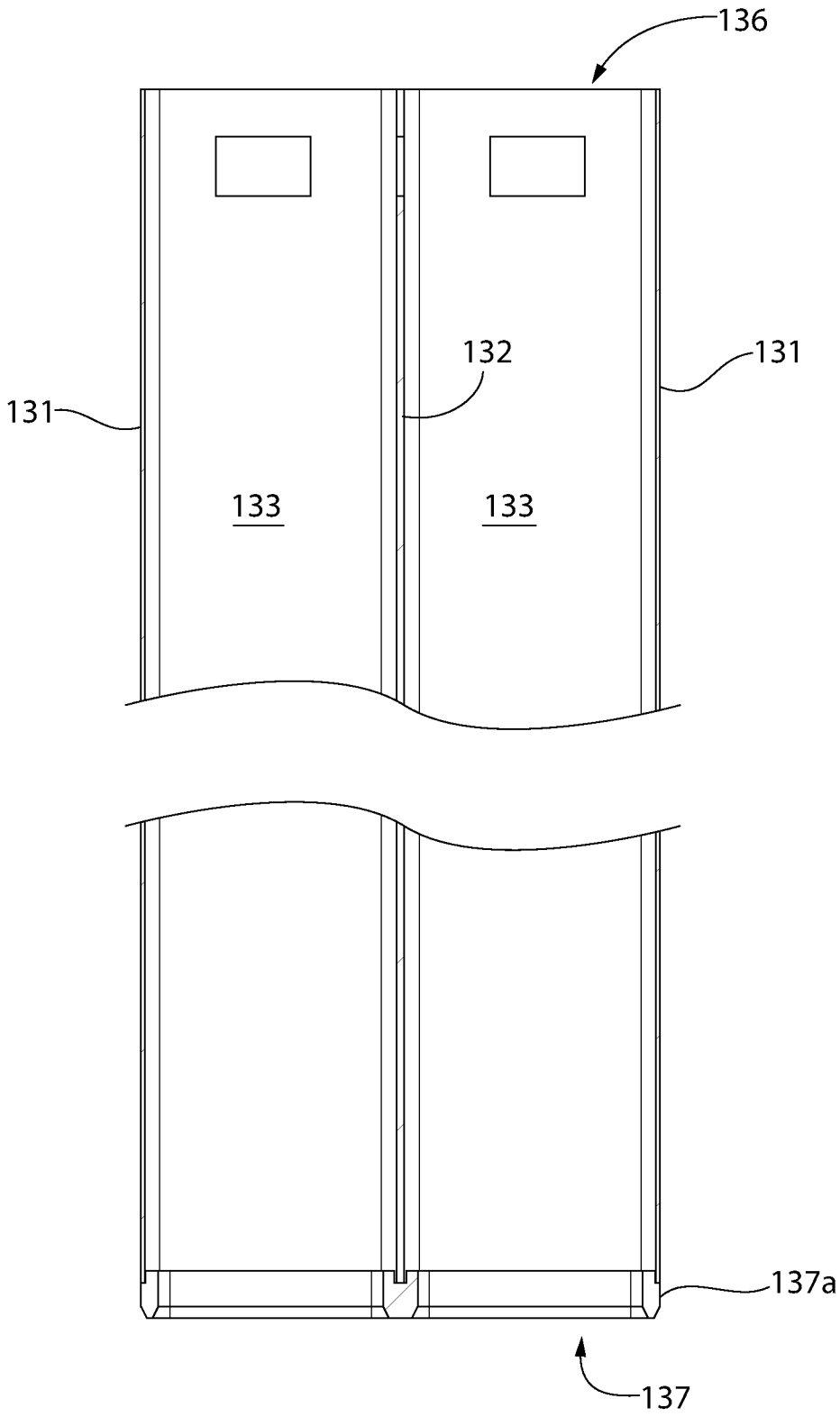

FIG. 41

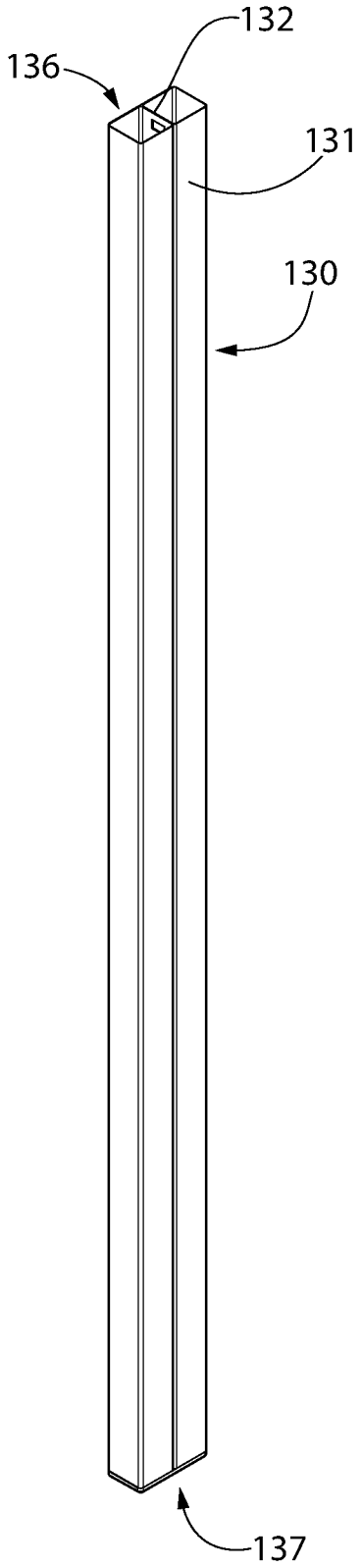

FIG. 42

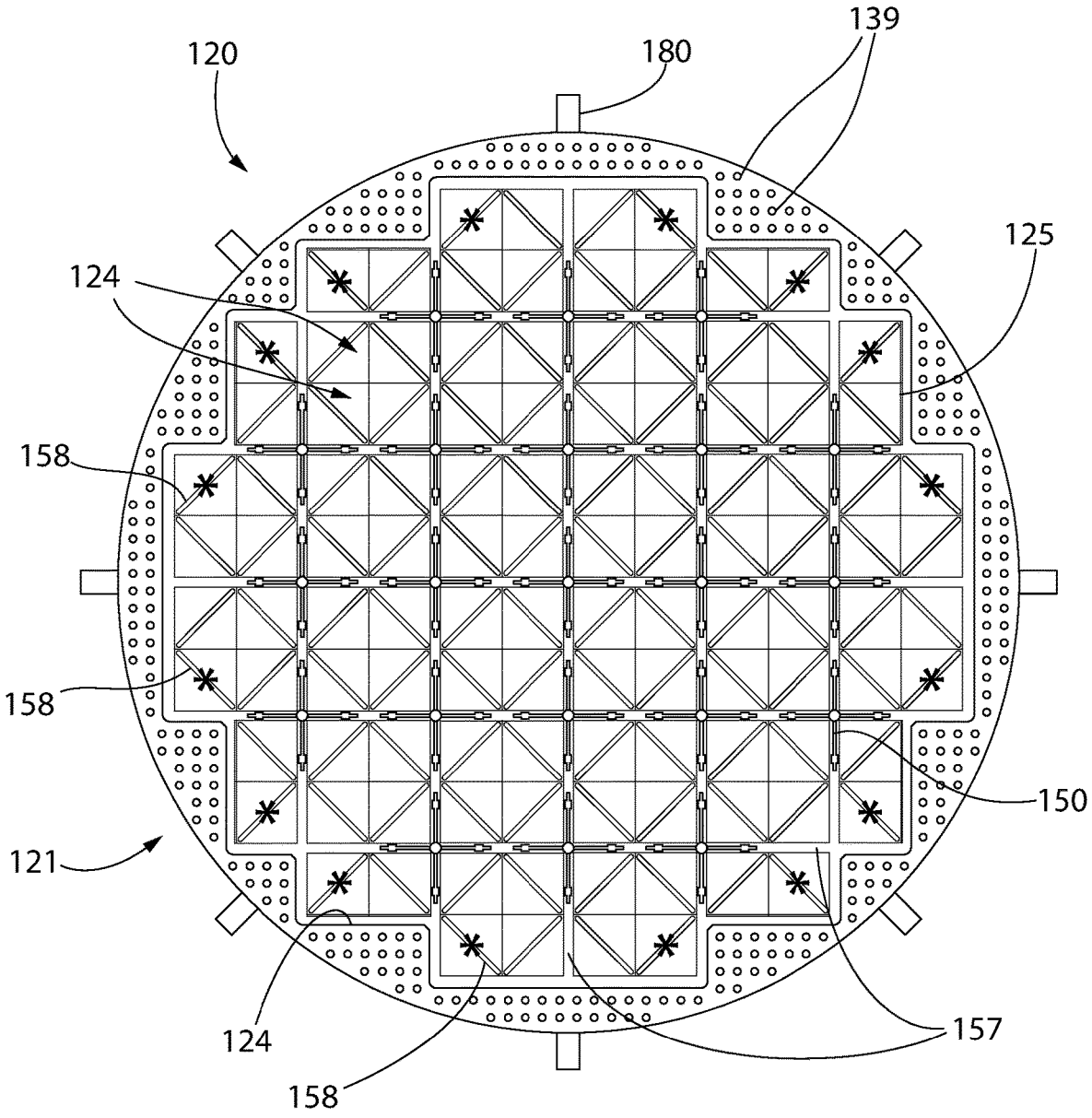

FIG. 43

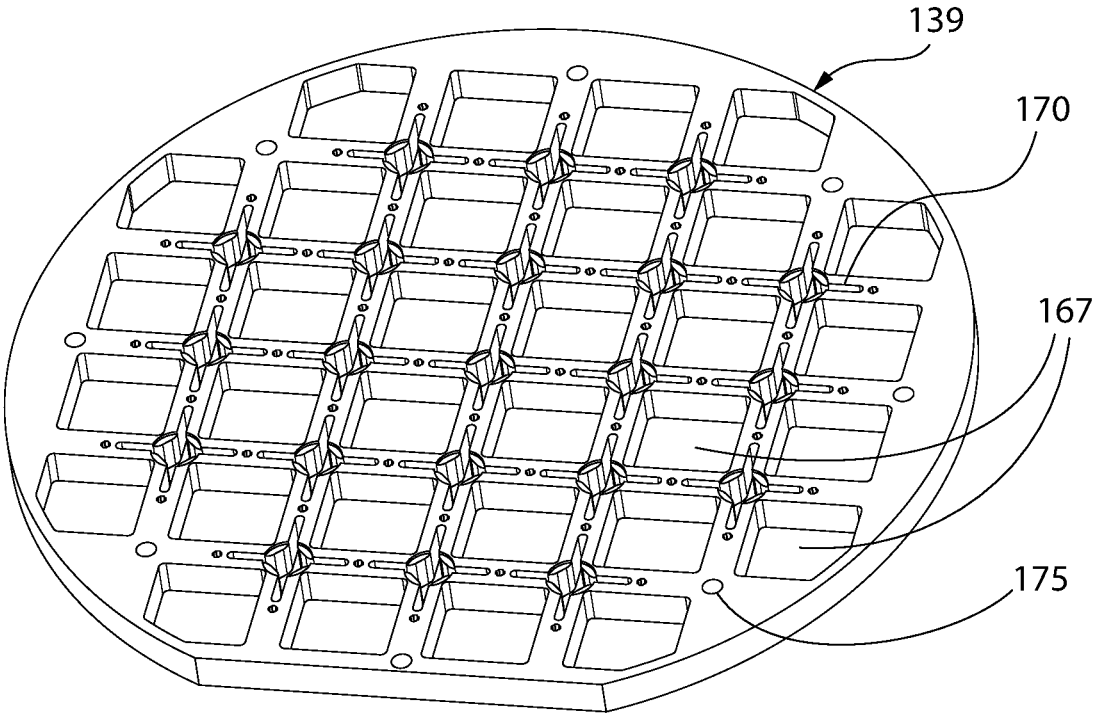

FIG. 44

OPTIMIZED NUCLEAR FUEL CORE DESIGN FOR A SMALL MODULAR REACTOR

CROSS-REFERENCE TO RELATED PATENT APPLICATIONS

[0001] The present application is a divisional of U.S. patent application Ser. No. 15/927,284 filed Mar. 21, 2018, which claims the benefit of U.S. Provisional Patent Application Ser. No. 62/474,396 filed Mar. 21, 2017; the entireties of which are incorporated herein by reference.

BACKGROUND OF THE INVENTION

[0002] The present application generally relates to nuclear reactors suitable for power generation facilities, and more particularly to a nuclear fuel core for such reactors.

[0003] A majority of nuclear reactors operating in the world today use light or ordinary water to remove heat from the fuel. Generally speaking, these water-cooled reactors use heat generated by a nuclear chain reaction to heat or boil water, combined with a Rankine steam cycle, to produce electricity. There are two general types of Light Water Reactors (LWRs)—Boiling Water Reactors (BWRs) and Pressurized Water Reactors (PWRs). BWRs operate at a pressure near 1000 psi and use nuclear heat to boil water directly in the reactor vessel, whereas PWRs operate at a much higher pressure of about 2250 psi, to prevent boiling in the reactor vessel. In PWRs, reactor water heat is transferred to a secondary steam generator circuit, where steam produced from boiling is subsequently used to produce electricity. Accordingly, the reactor cores of currently operating PWRs differ significantly from the reactor cores of BWRs in design and operating conditions.

[0004] PWR reactors cores are generally housed within a pressure vessel known as a reactor pressure vessel or simply reactor vessel which circulates primary coolant water through the core. A typical nuclear reactor core in a light water reactor comprises a multiplicity of tightly packed "nuclear fuel assemblies" (also referred to as nuclear fuel bundles) which generally may be of square cross section in the U.S. Each nuclear fuel assembly is generally an assemblage of multiple "nuclear fuel rods" which are sealed hollow cylindrical metal tubes (e.g. stainless steel or zirconium alloy) packed with enriched uranium fuel pellets and integral burnable poisons arranged in an engineered pattern to facilitate as uniform a "burning" profile of the nuclear fuel assembly (in both the axial and cross sectional/transverse directions) as possible. Control rod assemblies in a PWR are generally removably inserted directly into the fuel assemblies from above between the fuel rods and used to regulate the nuclear fission reaction. In a BWR, the control assemblies are generally inserted between fuel assemblies from the bottom.

[0005] The spacing and arrangement of nuclear fuel assemblies in the reactor core may significantly affect the neutronics. Neutronics relates to the physics of neutrons and their travel through materials in the core and the resulting fission reactions. Neutronics therefore affects the performance and power level of the reactor. In conventional PWR reactors, the fuel assemblies are arranged in an open lattice without any physical barriers between them. This creates homogeneous thermal hydraulic conditions since there is no hydraulic isolation of each fuel assembly from adjacent assemblies. For some PWR reactor core designs such as the current small modular reactor (SMR) design platform, this conventional arrangement may detrimentally affect the desired neutronics.

[0006] Improvements are desirable in PWR cores especially for SMRs.

SUMMARY OF THE INVENTION

[0007] A nuclear reactor fuel core suitable for a small modular reactor (SMR) is provided which is configured and constructed to improve the neutronics of the reactor. In one embodiment, the reactor fuel core may comprise a fuel assembly support system including plurality of vertically-extending channel boxes each configured to hold a plurality of fuel assemblies therein. The channel boxes provide channeled flow of primary coolant in the reactor vessel through the fuel assembly. The channel boxes may have a rectangular prismatic or cuboid configuration in some embodiments. Each channel box may comprise perpendicularly oriented external or outer walls and internal or inner walls which intersect the outer walls perpendicularly in one embodiment. The inner walls divide the space within each channel box into a plurality of interior channels or cells each having a transverse cross section configured for holding no more than a single nuclear fuel assembly. Adjacent cells within each channel box formed on opposite sides of the inner walls are separated from each other by the single thickness inner walls alone with no open water gaps formed therebetween which thereby benefits the neutronics of the core. Advantageously, the inner wall structure of the channel boxes further serve to structurally reinforce the channel box to eliminate or minimize neutron induced permanent bowing or deformation over time which adversely affects full and proper insertion of reaction control rods.

[0008] The present channel boxes function to thermally and hydraulically isolate the fuel assemblies from each other. The channel boxes serve as semi-permanent metallic boxes, which remain within the fuel core when the nuclear fuel assemblies are replaced for refueling the reactor. Combination of the channel boxes and cruciform control rod blades in one embodiment facilitates a significant reduction in the number and cost of control elements required (as compared with PWR-conventional rod control clusters assemblies and un-channeled cores), and operational safety via substantial core shutdown margin and reactivity control of the reactor.

[0009] The small modular reactor disclosed herein may be a natural circulation PWR. The lack of primary coolant circuit cooling pumps dictates that SMR core design/geometry differ from traditional pumped-flow PWRs to aid such natural circulation which relies on temperature differentials as the means to induce and create flow of primary coolant through the reactor vessel and accompany steam generator. In some embodiments, the present SMR may operate at a design temperature of about 610 degrees F. and a pressure of 2500 psia (2250 psia nominal) to induce gravity flow circulation of primary coolant. The nuclear and thermal hydraulic performance (for optimized core performance and flow stability) requires the design to be able to control the flow distribution radially. The present SMR design advantageously adapts critical geometry aspects found in both BWRs and PWRs and modifies them to enhance the nuclear and thermal performance of the core, and neutronics.

[0010] In one aspect, a nuclear fuel core for supporting nuclear fuel assemblies includes: a longitudinal axis; an upper core plate; a lower core plate; a plurality of vertically elongated channel boxes extending between the upper and lower core plates, each channel box comprising outer walls and inner walls collectively defining a plurality of longitudinally-extending interior cells each having a transverse cross sectional area configured for holding no more than a single nuclear fuel assembly; and a cylindrical reflector circumferentially surrounding the channel boxes, the upper and lower core plates coupled to opposing ends of the reflector; wherein adjacent cells within each channel box are separated from each other by the inner walls.

[0011] In another aspect, a nuclear fuel core for a nuclear reactor includes: a longitudinal axis; an upper core plate; a lower core plate; a plurality of vertically elongated prismatic channel boxes extending between the upper and lower core plates, each channel box comprising a plurality of outer walls and inner walls collectively defining a plurality of longitudinally-extending interior cells each containing a single nuclear fuel assembly, each channel box separated from adjacent channel boxes by peripheral water gaps formed between the outer walls of the channel boxes; a plurality of cruciform control rods slideably inserted through the peripheral water gaps from above the upper core plate for vertical movement between the channel boxes; and a cylindrical reflector circumferentially surrounding the channel boxes, the upper and lower core plates engaging opposing ends of the reflector; wherein the fuel assemblies within each channel box are separated from each other by the inner walls.

[0012] In another aspect, a nuclear fuel core for a nuclear reactor includes: a vertically elongated reactor vessel defining an internal cavity and a longitudinal axis; an upper internals unit disposed in the internal cavity, the upper internals unit comprising: a top support plate, an upper core plate spaced vertically apart from the top support plate, and an intermediate support plate spaced therebetween; a plurality of flow tubes extending between the intermediate support plate and upper core plate; and a plurality of tie rods coupling the top support plate to the upper core plate through the intermediate support plate to form a self-supporting assemblage removably insertable in the reactor vessel as a single unit; a lower internals unit disposed in the internal cavity comprising a plurality of fuel assemblies defining a fuel core, the lower internals unit further comprising: a plurality of vertically elongated channel boxes extending between the upper core plate of the upper internals unit and a lower core plate, each channel box comprising a plurality of outer walls and a plurality of inner walls collectively defining a plurality of longitudinally-extending interior cells each containing a single nuclear fuel assembly; and a cylindrical reflector circumferentially surrounding the channel boxes, the upper and lower core plates disposed on opposing ends of the reflector; wherein each channel box is vertically aligned with a respective flow tube in the upper internals unit to form a flow path therebetween. In various embodiments, the fuel assemblies within each channel box are separated from each other by the inner walls, each channel box is separated from adjacent channel boxes by peripheral water gaps formed between the outer walls of the channel boxes, and a plurality of cruciform control rods are slideably inserted in the peripheral water gaps for vertical movement therein to control reactivity in the reactor.

[0013] It is to be understood that the various aspects and features of the invention described herein can be combined in many various ways and combinations. Moreover, further areas of applicability of the present invention will become apparent from the detailed description provided hereinafter. It should be understood that the detailed description and specific examples, while indicating the preferred embodiment of the invention, are intended for purposes of illustration only and are not intended to limit the scope of the invention.

BRIEF DESCRIPTION OF THE DRAWINGS

[0014] The features of the exemplary embodiments will be described with reference to the following drawings in which like elements are labeled similarly, and in which:

[0015] FIG. **1** is a perspective view of a nuclear reactor pressure vessel including a fuel core according to an embodiment of the present disclosure;

[0016] FIG. **2** is a side view thereof;

[0017] FIG. **3** is a longitudinal cross-sectional view thereof showing an upper internals unit and a lower internals unit (fuel core) of the reactor in the reactor vessel;

[0018] FIG. **4** is top perspective view of the reflector assembly of the fuel core with fuel assemblies and other internals removed for clarity;

[0019] FIG. **5** is bottom perspective view thereof;

[0020] FIG. **6** is close-up view taken from FIG. **5**;

[0021] FIG. **7** is a side view of the reflector assembly of FIG. **4**;

[0022] FIG. **8** is cross-sectional view thereof;

[0023] FIG. **9** is a top plan view thereof;

[0024] FIG. **10** is a bottom plan view thereof;

[0025] FIG. **11** is top perspective view of the fuel core similar to FIG. **4** but showing the fuel assembly, channel boxes, control rods, and other appurtenances in place;

[0026] FIG. **12** is a close-up view taken from FIG. **11**;

[0027] FIG. **13** is a side cross-sectional view of the fuel core of FIG. **11**;

[0028] FIG. **14** is a close-up view taken from FIG. **13**;

[0029] FIG. **15** is a transverse cross-sectional view taken from FIG. **7**;

[0030] FIG. **16** is a top plan view of the lower core plate of the fuel core;

[0031] FIG. **17** is a cross-sectional view thereof taken from FIG. **16**;

[0032] FIG. **18** is a top perspective view thereof;

[0033] FIG. **19** is a bottom perspective view;

[0034] FIG. **20** is a top perspective view of the upper internals unit of the reactor vessel;

[0035] FIG. **21** is a bottom perspective view thereof;

[0036] FIG. **22** is a top perspective view thereof with the intermediate support plate removed to reveal the open tops of the flow tubes of the upper internals unit;

[0037] FIG. **23** is top plan view of the upper core plate of the upper internals unit which is disposed at the bottom of the flow tubes;

[0038] FIG. **24** is a side cross-sectional view thereof;

[0039] FIG. **25** is partial cross-sectional perspective view showing the assembled upper and lower internals unit (fuel core) and internal components of each;

[0040] FIG. **26** is perspective view of a channel box of the lower internals unit (fuel core) with a fuel assembly partially inserted in one of the cells of the box;

[0041] FIG. **27** is a close-up view taken from FIG. **26**;

[0042] FIG. **28** is a perspective view of a cluster of three channel boxes showing a cruciform control rod partially inserted between the boxes in a water gap;

[0043] FIG. **29** is a close-up taken from FIG. **28** showing details of the control rod construction;

[0044] FIG. **30** is a top perspective view of a cluster of four channel boxes showing the control rod partially inserted between corner regions of the boxes in the water gap;

[0045] FIG. **31** is a top plan view thereof;

[0046] FIG. **32** is top perspective view of one embodiment of a single channel box of square cross-sectional shape configured for holding multiple fuel assemblies (four in this example);

[0047] FIG. **33** is a bottom perspective view thereof;

[0048] FIG. **34** is a side view thereof;

[0049] FIG. **35** is a top close-up view taken from FIG. **32**;

[0050] FIG. **36** is an exploded view of the channel box showing an exemplary embodiment of one construction of the box;

[0051] FIG. **37** is a bottom close-up view taken from FIG. **33**;

[0052] FIG. **38** is top plan view of the channel box;

[0053] FIG. **39** is a bottom plan view thereof;

[0054] FIG. **40** is a transverse cross-sectional of the channel box taken from FIG. **34**;

[0055] FIG. **41** is a longitudinal cross-sectional view of the channel box taken from FIG. **38**;

[0056] FIG. **42** is a perspective view of a second channel box of rectangular cross-sectional shape usable in the fuel core;

[0057] FIG. **43** is a top plan view of the fuel core showing a combination of fuel assemblies and neutron reflection inserts variously installed in select cells of the channel boxes; and

[0058] FIG. **44** is a perspective view of an intermediate support plate of the upper internals unit.

[0059] All drawings are schematic and not necessarily to scale. Parts given a reference numerical designation in one figure may be considered to be the same parts where they appear in other figures without a numerical designation for brevity unless specifically labeled with a different part number and described herein

DETAILED DESCRIPTION

[0060] The features and benefits of the present disclosure are illustrated and described herein by reference to exemplary ("example") embodiments. This description of exemplary embodiments is intended to be read in connection with the accompanying drawings, which are to be considered part of the entire written description. Accordingly, the present disclosure expressly should not be limited to such embodiments illustrating some possible non-limiting combination of features that may exist alone or in other combinations of features; the scope of the claimed invention being defined by the claims appended hereto.

[0061] In the description of embodiments disclosed herein, any reference to direction or orientation is merely intended for convenience of description and is not intended in any way to limit the scope of the present invention. Relative terms such as "lower," "upper," "horizontal," "vertical,", "above," "below," "up," "down," "top" and "bottom" as well as derivative thereof (e.g., "horizontally," "downwardly," "upwardly," etc.) should be construed to refer to the orientation as then described or as shown in the drawing under discussion. These relative terms are for convenience of description only and do not require that the apparatus be constructed or operated in a particular orientation. Terms such as "attached," "coupled," "affixed," "connected," "interconnected," and the like refer to a relationship wherein structures are secured or attached to one another either directly or indirectly through intervening structures, as well as both movable or rigid attachments or relationships, unless expressly described otherwise.

[0062] FIGS. **1-25** depict a non-limiting embodiment of a nuclear pressurized water reactor (PWR) in the form of a small modular reactor (SMR) including a reactor pressure vessel **100** ("reactor vessel" for brevity hereafter) comprising a fuel core with a fuel assembly support system according to the present invention which exhibits improved neutronics.

[0063] Reactor vessel **100** comprises a longitudinal axis LA, top head **101**, bottom head **102**, and a cylindrical shell **103** extending between the heads. Top head **101** may be bolted to the shell **103** in one embodiment to access the core, or welded in other embodiments. Reactor vessel **100** defines a longitudinally extending internal cavity **104** configured for holding the reactor internals. The reactor internals include an upper internals unit **110** and lower internals unit **112** (see, e.g. FIGS. **3** and **25**). The lower internals unit **112** contains the fuel assemblies **124** and defines the nuclear fuel core **120**. The upper internals unit **110** provides a structure for movably supporting and guiding the control rods **150** inserted in the fuel core to control the reaction and power output. The lower internals unit **112**/fuel core **120** (shown schematically in FIG. **3**) is disposed within cavity **104** in a lower portion of the reactor vessel. The upper portion of the cavity **104** of the reactor vessel **100** contains the upper internals unit **110** which is vertically stacked on top of the lower internals unit **112** which the reactor is fully assembled.

[0064] Referring particularly to FIGS. **20-25**, the upper internals unit **110** comprises a metallic tubular shell or shroud **107** of cylindrical shape which is removably inserted within the reactor vessel cavity **104** on top of the fuel core **120** (lower internals unit **112**). Shroud **107** is in fluid communication with reactor core **120**, and closely coupled thereto for upflow of primary coolant from through the core directly into the shroud which forms a riser. Shroud **107** is spaced inwardly from the interior surface of shell **103** and concentrically aligned thereto. This defines an annular downcomer region **108** between the shell and shroud. Shroud **107** may be formed of a corrosion resistant metal, such as for example stainless steel or other materials.

[0065] The upper internals unit **110** further includes (from top to bottom) a top support plate **135**, intermediate support plate **139**, and an upper core plate **125** arranged in vertically spaced relationship. The foregoing plates may be formed of a suitable metal such as steel or other. The space between the top and intermediate support plates **135**, **139** within shroud **107** defines an upper flow plenum **165**. A plurality of rectangular prismatic shaped metallic flow tubes **166** extend vertically between the intermediate support plate **139** and upper core plate **125**. The flow tubes may have a rectilinear transverse cross-sectional shape and can include a combination square tubes **166***a* and rectangular tubes **166***b* in cross section which become axially aligned with complementary configured channel boxes **130** when installed in the reactor vessel **100**, as further described herein. The flow tubes **166** have open tops and bottoms and are in fluid communication

with each fuel assembly **124** disposed in the fuel core **120** below for receiving circulating primary coolant from the channel boxes.

[0066] Referring particularly to FIGS. **15-19**, the upper core plate **125** comprises an open metal lattice or grid structure defining a plurality of rectilinear cells or flow openings **127** each configured to fluidly communication with a single channel box **130** disposed in the fuel core **120**, as further described herein. When inserted into the reactor vessel **100**, the upper core plate **125** may abuttingly engage the tops of the plurality of channel boxes **130** to form a relatively tight fluid connection. In one embodiment, as shown, the flow openings **127** may include a combination of square openings **127***a* for mating with channel boxes **130** having a square transverse cross section and rectangular openings **127***b* for mating with channel boxes having a rectangular transverse cross section. The flow openings **127** are arranged in spaced apart linear horizontal rows (as shown) separated transversely extending portions of the grid body structure. The upper core plate **125** may include a polygonal-shaped perimeter portion with a multiple stepped configuration arranged to engage the complementary configured multiple stepped interior surface **200** of the cylindrical reflector **121** (see, e.g. FIG. **4**) to operably key and lock the upper core plate in rotational position relative to the cylindrical reflector. The upper core plate **125** further includes tie rod openings **142** for inserting tie rods **134** therethrough which hold the upper internals unit **110** together, as further described herein.

[0067] A plurality of cruciform shaped control rod openings **171** formed in the upper core plate **125** slideably receive a complementary configured cruciform shaped bladed portion of a control rod **150** therein (see, e.g. FIG. **30**). The control rod openings **171** are arranged in a wide array covering the full extent of the upper core plate **125**. Each control rod opening **171** may be disposed proximate to adjacent corner regions formed between the square and/or rectangular cells **127**, as shown. This allows the control rods to be inserted between channel boxes **130** in the fuel core **120** in peripheral water gaps **157** formed between adjacent channel boxes, and not inside the fuel assemblies. Unlike a PWR core comprised of large (e.g., 8"×8") conventional PWR fuel assemblies that uses rod cluster control assemblies (RCCAs) inserted into guide tubes within the fuel assemblies, reactivity in the present SMR fuel core **120** is regulated by control blades that are cruciform in shape, located outside of the fuel assemblies, and which are inserted from the top of the core. This advantageously allows for a substantial reduction of the number of control rod drive mechanisms (CRDMs) required to achieve sufficient reactivity control and shutdown margin. In addition, inserting control blades outside of the channel box **130** assemblies allows for unobstructed paths from the top of the reactor pressure vessel for insertion of in-core instruments within fuel assemblies **124** (e.g., inside of the channel boxes) needed to monitor core power distributions. Possible interference from neighboring components in the core is thus avoided which might snag and impede full insertion of the control rods **150**. This further advantageously eliminates the need for penetrations at the bottom of the reactor pressure vessel for both control rod drives and in-core instruments for example.

[0068] The intermediate support plate **139** (best shown in FIG. **44**) is similarly a metal lattice or grid structure which includes a plurality of rectilinear shaped flow openings **167** which place the flow tubes **166** in fluid communication with upper flow plenum **165**. Flow tubes **166** are therefore each axially aligned with a respective flow opening in the intermediate support plate **139** and a respective flow opening **127** in the upper core plate **125** (see, e.g. FIGS. **23-24**) which also places each flow tube in fluid communication with the fuel core **120**, as further described herein. Interspersed between flow openings **166** are a plurality of cruciform shaped openings **170** of similar configuration to and for the same purpose as cruciform shaped openings **171** in the upper core plate **125**.

[0069] A plurality of metal control rod guide tubes **172** extend between the top and intermediate support plates **135**, **139**. Each tube **172** is coaxially aligned with one of a plurality of circular holes **173** formed through the top support plate **135** and one of the cruciform control rod openings **170** in the intermediate support plate **139**. It bears noting that the control rod guide tubes **172** may have diameters larger than holes **173** in the top support plate **135** to define spacers which hold the top support plate **135** in spaced relation to the intermediate support plate **139** when the upper internals assembly is compressed by the tie rods **134**.

[0070] The upper internals unit **110** of the reactor may therefore be held together by a plurality of vertically-extending tie rods **134** in one embodiment which are fastened to each of the top support plate **135** and upper core plate **125** by fasteners such as threaded nuts **174**. Tie rod holes **175** in the intermediate support plate **139** allow the tie rods **134** to pass completely through this plate without engagement. When the upper internals unit **110** is assembled, the tie rods **134** are tightened which compresses the control rod guide tubes **172**, intermediate support plate **139**, and flow tubes **166** between the top support plate **135** and upper core plate **125** forming a self-supporting assemblage or structure which can be transported and inserted into or removed from the cavity **104** of the reactor vessel **100** as single unit. It bears noting that the space formed between the intermediate support plate **139** and upper core plate **125** within shroud **107** provides a compartment or area in the upper internals unit **110** for selectively withdrawing the cruciform shaped control rods **150** to control the nuclear reaction and power production. The control rods **150** are vertically movable up and down in this compartment between the flow tubes **166**.

[0071] In operation, core cooling water referred to as "primary coolant" in the art circulates through the reactor vessel **100**, upper internals unit **110**, and fuel core **120** (lower internals unit **112**) between a primary coolant inlet nozzle **105** and a primary coolant outlet nozzle **106**. In one embodiment, the inlet and outlet nozzles **105**, **106** may be combined in a single common primary coolant fluid coupling **109** connected directly to the shell **103** of reactor vessel **100** as shown. In one construction, the combined inlet-outlet flow nozzles **105/106** may be formed by two concentric hollow forgings which define the outer inlet nozzle **105** and the inner outlet nozzle **106**. Inlet nozzle **105** is therefore nested inside outlet nozzle **106** in this arrangement. The outlet nozzle **106** has one end welded to the reactor shroud **107** (internal to the reactor vessel shell **103**) and an opposite end configured for welding to an inlet nozzle of a steam generator vessel which receives primary coolant from the reactor vessel **100** to produce steam for a Rankine power

generation cycle (not shown). Such a steam generator is shown for example in commonly-owned U.S. Pat. No. 9,892,806, which is incorporated herein by reference. The inlet nozzle **105** has one end welded to the reactor vessel shell **103** and an opposite end configured for welding to an outlet nozzle of the steam generating vessel. Inlet nozzle **105** is in direct fluid communication with the annular downcomer region **108**. Regarding the primary coolant flow path, primary coolant in a cooled state from the steam generator enters reactor vessel **100** through inlet nozzle **105** and flows downward through the annular downcomer region to the bottom of the reactor vessel. The flow enters the reactor core **120** and is heated by the fuel assemblies **124** causing the primary coolant to rise into shroud **107** of the upper internals unit **110** via natural circulation in one embodiment. The heated primary coolant rises through the flow tubes **166** and collects in the upper flow plenum **165**. The primary coolant exits the upper flow plenum **165** through a lateral opening **168** in the shroud **107** (see, e.g. FIG. **25**) and enters the outlet nozzle **106** from which the coolant flows back to the steam generator.

[0072] The foregoing reactor vessel, nozzles, and components of the upper internal unit **110** may be formed of a preferably corrosion resistant metal, such as stainless steel for example in one non-limiting embodiment. Other suitable metallic materials however may be used and does not limit the invention.

[0073] The lower internals unit **112** of the reactor which defines the fuel core **120** will now be further described. Referring to FIGS. **4-19**, the fuel core comprises a plurality of vertically-extending fuel assemblies **124** each including a multiplicity of hollow fuel rods **160** each containing nuclear fuel pellets such as uranium which generates heat to heat the primary coolant in the reactor vessel **100**. The fuel assemblies **124** may have a square cross-sectional shape in one embodiment and include a top flow nozzle structure **161** including lifting members **162** for rigging to move and place the fuel assembly in the core.

[0074] A vertically elongated metallic cylindrical reflector **121** surrounds the core of fuel assemblies **124** which helps to protect the reactor pressure vessel **100** from embrittlement caused by fast spectrum neutrons (>1 MeV), while additionally reflecting thermal neutrons back towards the core. Reflector **121** has an annular body in transverse cross section that defines an interior space **123** configured to receive the plurality of fuel assemblies **124** therein. Reflector **121** may have substantially the same diameter as the upper shroud **107** which may engage and be supported by the reflector. In one embodiment, the reflector **121** may be comprised of a plurality of vertically stacked annular ring segments **122** to facilitate assembly of the reflector within the lower portion of the reactor vessel **100**. The reflector segments **122** are tightly abutted together to form an integral cylindrical wall. In one embodiment connecting rods **176** which extend vertically from the upper-most reflector segment **122** to the lower-most segment may be provided to tie the structure together and properly align each segment rotationally to the adjoining segments. The connecting rods **176** allow for a degree of thermal expansion between the reflector segments **122**. A plurality of vertically-extending cooling conduits **139** may be provided which are integrally formed completely through each segment **122** from top to bottom for cooling the cylindrical reflector **121**. Primary coolant may therefore circulate vertically through the concentrically aligned conduits in each segment for cooling. The connecting rods **176** ensure that the cooling conduits **139** are properly aligned to adjoining cooling conduits in other reflector segments **122**. In other possible embodiments, it bears noting that the reflector may comprise a single monolithic annular cylindrical structure or body. The reflector **121** may be made of a suitable metal, which preferably may be corrosion resistant such as stainless steel or others.

[0075] As shown in FIG. **4**, reflector **121** may be machined, cast, or otherwise formed to create a polygonal-shaped multiple stepped interior wall surface **200** configured to engage complementary configured keying structures of the upper and lower core plates **125** and **126** when attached to the reflector. This rotationally locks the core plates **125**, **126** in position relative to the reflector, as further described herein. The connecting rods **176** noted above ensures that the stepped facets or surfaces of each reflector ring segment **122** are properly aligned with each other in adjoining segments in the vertical stack.

[0076] The fuel core **120** further includes a lower core plate **126** and a plurality of vertically elongated channel boxes **130** supported by the lower core plate. When the upper internals unit **110** is placed on top of the fuel core **120** in the reactor vessel **100**, the channel boxes **130** will extend vertically between the upper and lower core plates **125**, **126**. The channel boxes **130** each provide a flow conduit or channel for flow of primary coolant through the fuel assemblies **124** disposed in the boxes. As shown in FIGS. **30** and **31** particularly, each channel box **130** is transversely/laterally separated from adjacent channel boxes by peripheral water gaps **157** which are filled by primary coolant during normal operation of the reactor.

[0077] Referring now generally to FIGS. **26-42**, the channel boxes **130** may each define a vertical centerline CL and have a generally rectangular prismatic or cuboid configuration in one embodiment as illustrated. Channel boxes **130** are longitudinally and vertically elongated structures each including a top end **136** and bottom end **137**, and plurality of sidewalls **138** extending between the ends. Bottom end **137** may include a base reinforcement **137***a* for abutting engaging the lower core plate **126** when inserted in the core to prevent damage to the channel box **130**. Channel boxes **130** may have a height that extends for a majority of, and in some embodiments as shown substantially the entire height of the cylindrical reflector **121**. Each channel box **130** in one embodiment is formed by a plurality of perpendicularly intersecting outer walls **131** and inner walls **132** collectively defining a plurality of vertical longitudinally-extending interior open channels or cells **133** configured for holding a fuel assembly **124**. Each cell **133** has a transverse cross sectional area configured for receiving and holding no more than a single or solitary nuclear fuel assembly **124** which may have a square cross-sectional shape in the non-limiting illustrated embodiments. The outer walls **131** may thus be arranged perpendicularly to each other and define a perimeter of each box. The inner walls **132** may also be disposed perpendicularly to each other and intersect at right angles to form a cruciform configuration (in transverse cross-sectional view) as shown.

[0078] In one embodiment, the array of channel boxes **130** provided may include a combination of boxes having either a square or a rectangular transverse cross section in shape for placement in different regions of the fuel core **120**. The square channel boxes (see, e.g. FIGS. **32-41**) have four cells

133 with cruciform inner walls 132 and may comprise a majority of the number of boxes positioned in both the inboard and portions of the peripheral or outboard regions of the fuel core. The rectangular channel boxes (see, e.g. FIG. 42) have two cells 133 with a single straight inner wall 132 and may be selectively positioned in certain outboard regions of the fuel core to advantageously maximize the number of fuel assemblies 124 than can be packed into the core.

[0079] In one exemplary construction, the outer and inner walls 131, 132 of the channel boxes 130 may be formed by a combination of longitudinal structural metal plates which are assembled and welded together along their abutting longitudinal edges 140 to form the integral welded structures depicted in the figures which have substantial strength and stiffness resistance to bowing or bending normal to the vertical centerline of the boxes. FIG. 36 is an exploded view of the plates in one representative assembly of a square channel box 130. In this embodiment, the square channel box 130 may be formed by four L-shaped exterior wall plates of single thickness welded together by longitudinally-extending welds 141 along their mating longitudinal edges 140 to form the outer walls 131 creating the channel box's perimeter. The inner walls 132 may be formed by two L-shaped interior wall plates of single thickness placed back to back at their corner which may be welded together to create a cruciform structure with perpendicularly intersecting walls. In one construction, the free longitudinal edges of the interior wall plates may each be welded to and at the intersection of abutted mating longitudinal edges 140 of two exterior wall plates. The interior wall plates of the inner walls 132 therefore intersect the outer walls 131 perpendicularly at right angles.

[0080] It bears noting that the inner walls 132 formed by the L-shaped interior wall plates form a cruciform shaped internal lateral bracing (in transverse cross section) for each channel box 130. This structurally reinforces the channel box 130 which creates a robust construction that resists radiation induced bowing and bending forces acting in a plane transverse to the vertical centerline CL of the channel box (and longitudinal axis of the fuel core 120). This is a common problem with fuel assembly box structures used in BWR reactors which have completely open center regions that lack such interior walls or bracing and subsequently cannot effectively resist radiation bowing which adversely prevents proper and complete insertion of the control rods in the fuel core over time. The structurally reinforced channel boxes 130 disclosed herein represent an advance over such unbraced prior channel box fuel assembly support structures.

[0081] In addition, it bears noting that the close-packed nature of the four fuel assemblies contained within one channel box 130, contrary to currently operating boiling water reactors (BWRs) which have each individual assembly surrounded by its own channel box, provides increased operational safety for the conditions found in the present small modular reactor (i.e. natural circulation primary coolant with a relatively low inlet temperature) by reducing the moderator-to-fuel ratio.

[0082] The foregoing construction of the channel boxes and arrangement of interior cells 133 benefits the neutronics of the nuclear reactor by eliminating water gaps between fuel assemblies 124 contained in the cells. Each interior cells shares a common inner wall 132 with at least one other cell and is separate therefrom by the single thickness of the common inner wall. No open gaps or double walls are formed between cells 133 in one embodiment.

[0083] In one embodiment, the channel boxes 130 may be constructed of a zirconium-based metal alloy. Other suitable metallic materials however may be used.

[0084] The lower core plate 126 is coupled to the bottom of the cylindrical reflector 121. Referring now to FIGS. 15-19, the lower plate core plate 126 includes a top 151 and bottom 152 defining upward and downward facing surfaces. Lower core plate 126 generally comprises a substantially planar circular metallic body defining an array comprising a plurality of upwardly open receptacles 143 each complementary configured to and engaging a respective bottom end 137 of one of the channel boxes 130 for support. The receptacles 143 include a combination of square receptacles for receiving and engaging square channel boxes 130 and rectangular channel boxes for rectangular channel boxes. Each receptacle therefore has an upwardly facing support surface having a complementary configuration to the bottom end surface of the channel box 130 to be received therein. Accordingly, each receptacle comprises either a cruciform support surface 148 (for square channel boxes) which engages a complementary configured cruciform bottom end surface portion of the channel box, or linear support surface 149 (for rectangular channel boxes) which engages a linear bottom end surface portion of the channel box. The support surfaces 148 and 149 are defined by the tops of recessed vertical divisional walls 153 within each receptacle 143 formed by the structural body of the lower core plate 126. When the bottom ends 137 of the channel boxes 130 are engaged with the receptacles and support surfaces, the division walls 153 fluidly separate the flow of primary coolant upwards through the open cells 133 of each channel box 130 to avoid or minimize any cross flow into adjacent cells. The division walls 153 therefore define a plurality of sub-cells 177 within each receptacle 143 (four within a square receptacle and two within a rectangular receptacle as shown).

[0085] Lower core plate 126 includes a plurality of flow orifices 146 which are in fluid communication with the bottom flow plenum 178 formed beneath the lower core plate in the reactor vessel 100 (see, e.g. FIG. 3). Each sub-cell 177 in the receptacles 143 of the lower core plate 126 has an associated flow orifice 146 which are in fluid communication with its respective channel box 130 and fuel assembly 124 therein. The square receptacles 143 may therefore have four orifices 146 and rectangular receptacles two orifices. The flow orifices 126 have diameters selected to produce the desired primary coolant flow rate through each channel box 130 and fuel assembly 124.

[0086] The lower core plate 126 further comprises a plurality of upstanding guide walls 145 arranged in a perpendicularly intersecting array as shown. The guide walls 145 slideably engage and guide the bottom ends 137 of the channel boxes 130 into the upwardly open receptacles 143 of the lower core plate 126 when the channel boxes are initially inserted into the fuel core 120. In addition, the guide walls 145 further act to help isolate and separate the flow from the receptacles 143 in the lower core plate 126 into the channel boxes 130 to minimize possible cross flow.

[0087] In some embodiments, lower core plate 126 may further include a polygonal-shaped and raised annular anti-rotation lip 144 protruding upwards from a top surface of the

lower core plate. The anti-rotation lip **144** extends circumferentially around a peripheral portion of the lower core plate as shown. The anti-rotation lip **144** may have a multiple stepped configuration which matches and engages the complementary configured multiple stepped interior surface **200** of the cylindrical reflector **121** in a similar manner to the upper core plate **125** to operably key and lock the lower core plate **126** in rotational position relative to the cylindrical reflector. When the lower core plate **126** is engaged with cylindrical reflector **121**, the anti-rotation lip **144** is inserted inside a bottom end of the cylindrical reflector and peripheral portions of the circular flat body of the lower core plate outboard of the anti-rotation lip engage a downward facing bottom end surface of the cylindrical reflector (see, e.g. FIG. **8**). A stepped shoulder structure is therefore formed between the protruding anti-rotation lip **144** and adjoining upward facing flat top surface of the lower core plate **126**. It bears noting that the guide walls **145** may have a greater height than the anti-rotation lip **144** and are arranged to avoid engaging the reflector **121**.

[0088] In some embodiments, the planar peripheral portions of the lower core plate **126** outboard of the raised anti-rotation lip **144** may include a plurality of through flow holes **147** (see, e.g. FIGS. **16** and **17**). The flow holes **147** substantially line up vertically and axially up with the cooling conduits **139** in the cylindrical reflector. This allows primary coolant in the reactor vessel to circulate and flow through the lower core plate and reflector ring segments **122** to cool the reflector **121**. Flow holes **147** are in fluid communication with the lower flow plenum **178** (see, e.g. FIG. **3**).

[0089] In one embodiment, the metal upper and lower core plates **125**, **126** may each be formed of a suitable corrosion resistant metal such stainless steel. Other metals may be used.

[0090] Referring to FIGS. **3-8** and **10**, the lower core plate **126** and cylindrical reflector **121** are supported in the reactor vessel **100** by an open space frame type core support member **180** abuttingly engaging bottom surfaces of the cylindrical reflector and the lower core plate. Support member **180** may comprise a vertically-extending central hub **181** and plurality of arms **182** extending radially therefrom and angularly spaced apart relative to each other. The arms each include an arcuately convex bottom surface **183** configured to engage an arcuately concave surface inside the bottom head **102** of the reactor vessel **100** which receives the fuel core. The lower core plate **126** may contain polygonal shaped notches **184** which engage and locate each arm **182** of the support member **180** (see also FIG. **17-19**). The core support member **180** raises the core above the bottom of the reactor vessel **100** and defines a bottom flow plenum **178** beneath the lower core plate **126**. Flow traveling downwards from the annular downcomer **108** of the reactor vessel enters flow plenum **178** and reverses direction to then flow upwards through the flow orifices **146** of the lower core plate into the channel boxes **130** and fuel assemblies **124**. The bottom head **102** of reactor vessel **100** may include a drain nozzle **179** in fluid communication with the bottom flow plenum **178** for draining primary coolant out of the reactor vessel. In some non-limiting embodiments, the support member **180** may be welded to the lower core plate and/or the lower-most segment **122** of the cylindrical reflector **121**. Support member **180** may be preferably made of a suitable strong corrosion resistant metal, such as stainless steel as one non-limiting example.

[0091] FIGS. **28-30** show the cruciform control rod assembly in greater detail. Each control rod **150** comprises a cylindrical shaft **155** having a top end configured to engage a control rod drive mechanism (not shown) mounted above the fuel core **120** and a plurality of perpendicularly intersecting blades **154** coupled to a bottom end of the shaft. The blades **154** are arranged to form a cruciform shape in transverse cross section as shown. The blades may incorporate a neutron absorbing material such as for example without limitation B4C (boron carbide) powder, hafnium plates, a combination thereof, or other materials. The blades may be formed of metal plates such as steel or zircalloy creating a structure that forms the cruciform. To facilitate smooth sliding insertion of the control rods **150** into the peripheral water gaps **157** created between the channel boxes **130** such as in the corner regions between adjacent channel boxes in the core as shown (see, e.g. FIGS. **30-31**), the blades **154** may optionally include one or more protruding sliding bearing **156** which may be a raised protrusion or tab, roller type bearing, ball, or other element on the blade which functions as a bearing to slideably engage the sidewalls of the channel boxes **130** when the blades are moved upwards/downwards in the fuel core **120**.

[0092] In some embodiments, some of the peripheral channel boxes **130** of the fuel core **120** may have removably insertable reflector inserts **158** disposed in one or more of the cells **133** as shown in FIG. **43**. Inserts **158** may be assemblies which may comprise either solid stainless steel pins or stainless steel tubes that contain neutron reflection materials for a number of purposes including, but not limited to, improved neutron economy for the reactor core and specific isotope production. These reflector assemblies facilitate varying reflector material axially to allow for optimization of power distributions in a reactor which has a large axial gradient in physical characteristics, such as in the present small modular reactor.

[0093] An exemplary method for assembling a nuclear reactor will be briefly described. The core support member **180**, lower core plate **126**, and lower-most reflector ring segment **122** may first be inserted into the reactor vessel **100**. The lower core plate **126** is rotationally keyed to the reflector segment **122** via the raised annular anti-rotation lip **144** protruding upwards from a top surface of the lower core plate. The support member **180** engages the bottom head **102** of the reactor vessel. Additional reflector segments **122** may next be stacked upon the already emplaced segment **122** one by one to build up successive courses of the segments until the complete reflector **121** is created. The channel boxes **130** may next be lowered into the reactor vessel **100** to abuttingly engage their bottom ends with a respective receptacle **143** in the lower core plate **126**. A single fuel assembly **124** is lowered into the rev and inserted into each channel box **130**. The control rods **150** may next be inserted into the core between the channel boxes **130** in the peripheral water gaps **157** at the positions described and shown herein. This essentially completes the lower internals unit **112** installation in the reactor vessel.

[0094] The fully preassembled self-supporting upper internals unit **110** may next be positioned over and lowered into the reactor vessel and stacked on top of the cylindrical reflector **121**. In the process, specifically, the upper core

plate **125** of the upper internal unit is engaged with and rotationally keyed to the upper-most reflector segment **122** via the mating multiple stepped surfaces **200**, **190** of the reflector segment and upper core plate respectively. This ensures proper alignment of the cruciform control rod openings **171**, **170** in the upper core and intermediate support plates **125**, **139** respectively. When the upper and lower internals units **110** and **112** (i.e. fuel core **120**) are therefore now stacked together in the reactor vessel **100**, each channel box **130** of the core will be vertically aligned with a corresponding flow tube **166** of the upper internals unit creating an array of unified primary coolant flow paths from the bottom flow plenum **178** at bottom end of the reactor vessel to the outlet nozzle **106** near the top. Additional remaining preparations may be completed and the top head **101** of the reactor vessel **100** may eventually be closed.

[0095] When core refueling is required, the reactor vessel is opened and the upper internals unit **110** is first removed. The control rods **150** remain in place within the fuel core **120** to control reactivity during the refueling outage. The required fuel assemblies **124** are removed and replaced as needed.

[0096] While the foregoing description and drawings represent exemplary embodiments of the present invention, it will be understood that various additions, modifications and substitutions may be made therein without departing from the spirit and scope and range of equivalents of the accompanying claims. In particular, it will be clear to those skilled in the art that the present invention may be embodied in other forms, structures, arrangements, proportions, sizes, and with other elements, materials, and components, without departing from the spirit or essential characteristics thereof. In addition, numerous variations in the methods/processes. One skilled in the art will further appreciate that the invention may be used with many modifications of structure, arrangement, proportions, sizes, materials, and components and otherwise, used in the practice of the invention, which are particularly adapted to specific environments and operative requirements without departing from the principles of the present invention. The presently disclosed embodiments are therefore to be considered in all respects as illustrative and not restrictive, the scope of the invention being defined by the appended claims and equivalents thereof, and not limited to the foregoing description or embodiments. Rather, the appended claims should be construed broadly, to include other variants and embodiments of the invention, which may be made by those skilled in the art without departing from the scope and range of equivalents of the invention.

What is claimed is:

1. A nuclear fuel core for a nuclear reactor, the fuel core comprising:

a longitudinal axis;

an upper core plate;

a lower core plate;

a plurality of vertically elongated prismatic channel boxes extending between the upper and lower core plates, each channel box comprising a plurality of outer walls and inner walls collectively defining a plurality of longitudinally-extending interior cells each containing a single nuclear fuel assembly, each channel box separated from adjacent channel boxes by peripheral water gaps formed between the outer walls of the channel boxes;

a plurality of cruciform control rods slideably inserted through the peripheral water gaps from above the upper core plate for vertical movement between the channel boxes;

a cylindrical reflector circumferentially surrounding the channel boxes, the upper and lower core plates engaging opposing ends of the reflector;

wherein the fuel assemblies within each channel box are separated from each other by the inner walls.

2. The fuel core according to claim **1**, wherein the control rods are disposed at junctions of corner regions between adjacent channel boxes.

3. The fuel core according to claim **2**, wherein the upper core plate includes a plurality of cruciform openings each slideably receiving one of the control rods therethrough for insertion into the fuel core.

4. The fuel core according to claim **1**, wherein the upper core plate is an open grid structure engaging upper portions of the channel boxes and defining a plurality of rectilinear open cells each axially aligned with one of the cells of the channel boxes.

5. The fuel core according to claim **4**, wherein the upper core plate has a polygonal-shaped perimeter with a multiple stepped configuration which engages a complementary configured multiple stepped interior surface of the cylindrical reflector to operably key and lock the upper core plate in rotational position relative to the cylindrical reflector.

6. The fuel core according to claim **1**, wherein the channel boxes have a rectilinear transverse cross-sectional shape and the inner walls have edges that perpendicularly intersect the outer walls.

7. The fuel core according to claim **6**, wherein the channel boxes includes a combination of rectangular channel boxes having a rectangular transverse cross-sectional shape disposed around exterior portions of the fuel core and square channel boxes having square transverse cross-sectional shapes.

8. The fuel core according to claim **1**, further comprising an upper internals unit stacked vertically on top of the cylindrical reflector, the upper internals unit comprising a plurality of vertically oriented flow tubes axially aligned with and in fluid communication with the cells of the channel boxes.

9. The fuel core according to claim **1**, wherein the cylindrical reflector is formed of multiple vertically stacked metallic annular segments abutted together to form an integral structure.

10. The fuel core according to claim **9**, wherein the cylindrical reflector includes a plurality of vertically cooling conduits extending from a top to a bottom of the reflector for cooling the reflector.

11. A nuclear fuel core for a nuclear reactor, the fuel core comprising:

a vertically elongated reactor vessel defining an internal cavity and a longitudinal axis;

an upper internals unit disposed in the internal cavity, the upper internals unit comprising:

a top support plate, an upper core plate spaced vertically apart from the top support plate, and an intermediate support plate spaced therebetween;

a plurality of flow tubes extending between the intermediate support plate and upper core plate; and

a plurality of tie rods coupling the top support plate to the upper core plate through the intermediate support

plate to form a self-supporting assemblage removably insertable in the reactor vessel as a single unit;

a lower internals unit disposed in the internal cavity comprising a plurality of fuel assemblies defining a fuel core, the lower internals unit further comprising:

a plurality of vertically elongated channel boxes extending between the upper core plate of the upper internals unit and a lower core plate, each channel box comprising a plurality of outer walls and a plurality of inner walls collectively defining a plurality of longitudinally-extending interior cells each containing a single nuclear fuel assembly; and

a cylindrical reflector circumferentially surrounding the channel boxes, the upper and lower core plates disposed on opposing ends of the reflector;

wherein each channel box is vertically aligned with a respective flow tube in the upper internals unit to form a flow path therebetween;

wherein each channel box is separated from adjacent channel boxes by peripheral water gaps formed between the outer walls of the channel boxes.

12. The fuel core according to claim **11**, wherein the fuel assemblies within each channel box are separated from each other by the inner walls.

13. The fuel core according to claim **12**, further comprising a plurality of cruciform control rods slideably inserted in the peripheral water gaps for vertical movement therein to control reactivity in the reactor.

14. The fuel core according to claim **11**, further comprising a cylindrical shroud disposed in the internal cavity stacked on top of the cylindrical reflector, the shroud surrounding the upper internals unit component.

15. The fuel core according to claim **14**, wherein an upper flow plenum is formed between top and intermediate support plates in the shroud and a control rod compartment is formed between the intermediate support plate and upper core plate in the shroud, the control rod compartment configured to receive a portion of the control rods withdrawn from the fuel core.

16. The fuel core according to claim **13**, wherein the control rods are disposed at junctions of corner regions between adjacent channel boxes.

17. The fuel core according to claim **16**, wherein the upper core plate includes a plurality of cruciform openings each slideably receiving one of the control rods therethrough for insertion into the fuel core.

18. The fuel core according to claim **1**, further comprising an upper internals unit stacked vertically on top of the cylindrical reflector, the upper internals unit comprising the flow tubes which are axially aligned with and in fluid communication with the cells of the channel boxes.

* * * * *