Office de la Propriété Intellectuelle du Canada
Un organisme d'Industrie Canada

Canadian Intellectual Property Office
An agency of Industry Canada

CA 2719275 C 2017/05/30

(11)(21) 2 719 275

(12) BREVET CANADIEN
CANADIAN PATENT

(13) C

(22) Date de dépôt/Filing Date: 2010/10/27

(41) Mise à la disp. pub./Open to Public Insp.: 2011/04/28

(45) Date de délivrance/Issue Date: 2017/05/30

(30) Priorité/Priority: 2009/10/28 (US12/588,779)

(51) Cl.Int./Int.Cl. *F28D 1/04* (2006.01), *F16L 1/028* (2006.01), *F16L 59/15* (2006.01), *F16L 7/00* (2006.01), *F24J 3/08* (2006.01)

(72) Inventeur/Inventor:
YANG, TAI-HER, TW

(73) Propriétaire/Owner:
YANG, TAI-HER, TW

(74) Agent: GOWLING WLG (CANADA) LLP

(54) Titre : CYLINDRE THERMOCONDUCTEUR INSTALLE AVEC CONDUITES DE CAROTTAGE EN U ET CONDUITES EN BOUCLE

(54) Title: THERMAL CONDUCTIVE CYLINDER INSTALLED WITH U-TYPE CORE PIPING AND LOOP PIPING

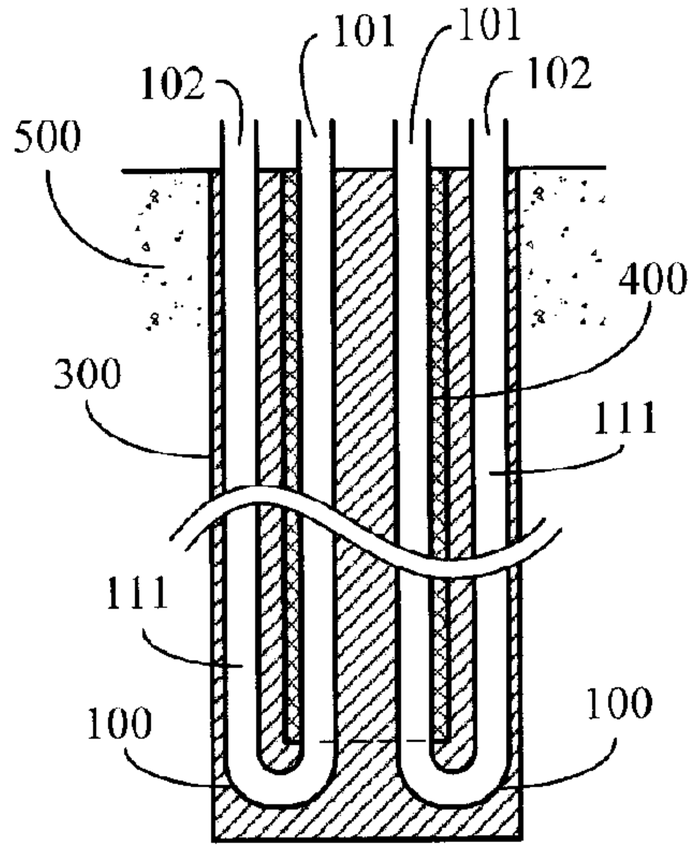

(57) Abrégé/Abstract:
The present invention relates to a thermal conductive cylinder installed with U-type core piping and loop piping for being installed within the natural thermal storage body or artifical thermal storage body; wherein the piping segments of fluid inlet terminal and/or outlet terminal of the U-type core piping and loop piping are directly made of thermal insulating material, or thermal insulating structure is installed between the inlet terminal and the outlet terminal; so as to prevent thermal energy loss between adjacent piping segments on the same side when thermal conductive fluid with temperature difference passing through.

ABSTRACT

The present invention relates to a thermal conductive cylinder installed with U-type core piping and loop piping for being installed within the natural thermal storage body or artifical thermal storage body; wherein the piping segments of fluid inlet terminal and/or outlet terminal of the U-type core piping and loop piping are directly made of thermal insulating material, or thermal insulating structure is installed between the inlet terminal and the outlet terminal; so as to prevent thermal energy loss between adjacent piping segments on the same side when thermal conductive fluid with temperature difference passing through.

TITLE: THERMAL CONDUCTIVE CYLINDER INSTALLED WITH U-TYPE CORE PIPING AND LOOP PIPING

BACKGROUND OF THE INVENTION

(a) Field of the Invention

The present invention relates to a thermal conductive cylinder installed with U-type core piping and loop piping for being installed within the thermal storage body (500) composed of natural thermal storage body, such as shallow surface of the earth, or pool, lake, river, ocean, etc, or artifical objects in solid, or gaseous, or liquid state; wherein the thermal conductive cylinder installed with U-type core piping and loop piping is constructed through that the piping segments of fluid inlet terminal and/or outlet terminal of the U-type core piping and loop piping are directly made of thermal insulating material, or thermal insulating structure is installed between the inlet terminal and the outlet terminal; so as to prevent thermal energy loss because of thermal conduction between adjacent piping segments of inlet terminal and outlet terminal on the same side when thermal conductive fluid with temperature difference passing through.

(b) Description of the Prior Art

Traditionally, thermal energy loss often occurs in U-type piping device of U-type piping heat exchanger, because of thermal conduction by temperature difference between adjacent piping segments of fluid inlet terminal and fluid outlet terminal installed on the same side when fluid with temperature difference passing through.

SUMMARY OF THE INVENTION

The present invention relates to radial U-type pipelines for passing thermal energy through each other, wherein the piping segments of the U-type fluid piping inlet terminal and/or outlet terminal, which are radial

U-type pipelines for passing thermal energy through each other, are directly made of thermal insulating material, or thermal insulating structure is installed between the inlet terminal and the outlet terminal; and the above piping system is installed within the thermal conductive cylinder made of thermal conductive material; so as to prevent thermal energy loss because of thermal conduction by temperature difference between adjacent piping segments with temperature difference of inlet terminal and outlet terminal installed on the same side when fluid with temperature difference passing through.

In accordance with an aspect of the invention, there is provided a thermal conductive cylinder for installation within a thermal storage body composed of a natural thermal storage body, the natural thermal storage body including one of a shallow surface of the earth, a body of water, and artificial objects in a solid, gaseous, or liquid state; wherein the thermal conductive cylinder is installed with a plurality of U-type core piping and constructed so that a thermal insulation is present between a fluid inlet terminal and a fluid outlet terminal of each of the plurality of U-type piping so as to prevent thermal energy loss because of thermal conduction between adjacent piping segments of the inlet terminal and the outlet terminal on a same side when thermal conductive fluid with a temperature difference passes through; wherein each of the plurality of U-type piping is used for one or more of the following types of thermal conductive fluid passing through, including: 1) liquid state fluid; 2) gaseous state fluid; 3) liquid to gaseous state fluid; and 4) gaseous to liquid state fluid, wherein two or more radially arranged sections of the U-type piping are installed within the thermal conductive cylinder and the two or more radially arranged sections of the U-type piping are discrete from and have interior flowpaths that are not in communication with each other

within the thermal conductive cylinder; and wherein main components of the thermal conductive cylinder are as follows: the plurality of U-type piping: each made of a U-type tubular body for the thermal conductive fluid to pass through, wherein the plurality of U-type piping is installed within a columnar thermal conductive body composed of solid state or colloidal object; each of the U-type piping has a separate first fluid inlet and outlet terminal and a separate second fluid inlet and outlet terminal, the piping segments near the first fluid inlet and outlet terminal are adjacently installed an axial core of the columnar thermal conductive body, and the piping segments near the second fluid inlet and outlet terminal are radially arranged along an axial direction and near an edge of the columnar thermal conductive body; the columnar thermal conductive body made of thermal conductive material, wherein the columnar thermal conductive body has a columnar structure with various geometric shape sections, for coating the U-type piping and a thermal insulating device; and the thermal insulating device made of a thermal insulating structure with thermal insulating effects, the thermal insulating structure including one of a solid body, a flexible body, a foam body, and an enveloped colloid, gas, liquid, or vacuum structure, for being placed between the piping segments near the first fluid inlet and outlet terminal of each of the U-type piping that are adjacently installed at the axial core of the columnar thermal conductive body, and the piping segments near the second fluid inlet and outlet terminal of each of the U-type piping and for substantially reducing thermal energy loss caused by thermal conduction between adjacent piping segments of the first fluid inlet and outlet terminal and the second fluid inlet and outlet terminal on the same side of the U-type piping.

In accordance with another aspect of the invention, there is provided a thermal conductive cylinder for installation within a thermal storage body

composed of a natural thermal storage body, the natural thermal storage body including one of a shallow surface of the earth, a body of water, and artificial objects in a solid, gaseous, or liquid state; wherein the thermal conductive cylinder is installed with a plurality of U-type core piping and constructed so that a thermal insulation is present between a fluid inlet terminal and a fluid outlet terminal of each of the plurality of U-type piping so as to prevent thermal energy loss because of thermal conduction between adjacent piping segments of the inlet terminal and the outlet terminal on a same side when thermal conductive fluid with a temperature difference passes through; wherein each of the plurality of U-type piping is used for one or more of the following types of thermal conductive fluid passing through, including: 1) liquid state fluid; 2) gaseous state fluid; 3) liquid to gaseous state fluid; and 4) gaseous to liquid state fluid, wherein two or more radially arranged U-type piping sections are installed within the thermal conductive cylinder and the two or more radially arranged U-type piping sections are completely discrete from and have interior flowpaths that are not in communication with each other within the thermal conductive cylinder; and wherein main components of the thermal conductive cylinder are as follows: the plurality of U-type piping each made of a U-type tubular body for the thermal conductive fluid to pass through, wherein the plurality of U-type piping is installed within a columnar thermal conductive body composed of solid state or colloidal object; each of the U-type piping has a separate first fluid inlet and outlet terminal and a separate second fluid inlet and outlet terminal, the piping segments near the first fluid inlet and outlet terminal are adjacently installed at an axial core of the columnar thermal conductive body, and the piping segments near the second fluid inlet and outlet terminal are radially arranged along an axial direction and near an edge of the columnar thermal conductive body; and the columnar thermal conductive body made of thermal conductive material, wherein the columnar

thermal conductive body has a columnar structure with various geometric shape sections, for coating the U-type piping.

In accordance with yet another aspect of the present invention, there is provided a thermal conductive cylinder for installation within a thermal storage body composed of a natural thermal storage body, the natural thermal storage body including one of a shallow surface of the earth, a body of water, and artificial objects in a solid, gaseous, or liquid state; wherein the thermal conductive cylinder is installed with a plurality of U-type core piping and constructed so that a thermal insulation is present between a fluid inlet terminal and a fluid outlet terminal of each of the plurality of U-type piping so as to prevent thermal energy loss because of thermal conduction between adjacent piping segments of the inlet terminal and the outlet terminal on a same side when thermal conductive fluid with a temperature difference passes through; wherein each of the plurality of U-type piping is used for one or more of the following types of thermal conductive fluid passing through, including: 1) liquid state fluid; 2) gaseous state fluid; 3) liquid to gaseous state fluid; and 4) gaseous to liquid state fluid, wherein two or more radially arranged U-type piping sections are installed within the thermal conductive cylinder and the two or more radially arranged U-type piping sections are discrete from and have interior flowpaths that are not in communication with each other within the thermal conductive cylinder; and wherein main components of the thermal conductive cylinder are as follows: the plurality of U-type piping each made of a U-type tubular body for the thermal conductive fluid to pass through, wherein each of the U-type piping has a separate first fluid inlet and outlet terminal and a separate second fluid inlet and outlet terminal, the piping segments near the first fluid inlet and outlet terminal are adjacently installed, and the piping segments near the second fluid inlet and outlet terminal are radially arranged along

an axial direction; and a thermal insulating device made of a thermal insulating structure with thermal insulating effects, the thermal insulating structure including one of a solid body, a flexible body, a foam body, and an enveloped colloid, gas, liquid, or vacuum structure, for being placed between the piping segments near the first fluid inlet and outlet terminal of each of the U-type piping and the piping segments near the second fluid inlet and outlet terminal of each of the U-type piping and for substantially reducing thermal energy loss caused by thermal conduction between adjacent piping segments of the first fluid inlet and outlet terminal and the second fluid inlet and outlet terminal on the same side of the U-type piping.

In accordance with yet another aspect of the present invention, there is provided a thermal conductive cylinder for installation within a thermal storage body composed of a natural thermal storage body, the natural thermal storage body including one of a shallow surface of the earth, a body of water, and artificial objects in a solid, gaseous, or liquid state; wherein the thermal conductive cylinder is installed with piping and constructed so that a thermal insulation is present between a fluid inlet terminal and a fluid outlet terminal of the piping so as to prevent thermal energy loss because of thermal conduction between adjacent piping segments of the inlet terminal and the outlet terminal on a same side when thermal conductive fluid with a temperature difference passes through; wherein the piping is used for one or more of the following types of thermal conductive fluid passing through, including: 1) liquid state fluid; 2) gaseous state fluid; 3) liquid to gaseous state fluid; and 4) gaseous to liquid state fluid, wherein the piping includes first segments respectively extending from a first fluid inlet and outlet terminal and a second fluid inlet and outlet terminal, and a wavy segment extending between the respective first segments of the piping; and wherein main components of the

thermal conductive cylinder are as follows: the piping made of a tubular body for the thermal conductive fluid to pass through, wherein the piping has a first fluid inlet and outlet terminal and a second fluid inlet and outlet terminal, the piping segments near the first fluid inlet and outlet terminal are adjacently installed, and the piping segments near the second fluid inlet and outlet terminal are radially arranged along an axial direction; and a thermal insulating device made of a thermal insulating structure with thermal insulating effects, the thermal insulating structure including one of a solid body, a flexible body, a foam body, and an enveloped colloid, gas, liquid, or vacuum structure, for being placed between the piping segment near the first fluid inlet and outlet terminal and the piping segment near the second fluid inlet and outlet terminal and for substantially reducing thermal energy loss caused by thermal conduction between adjacent piping segments of the first fluid inlet and outlet terminal and the second fluid inlet and outlet terminal on the same side of the piping.

BRIEF DESCRIPTION OF THE DRAWINGS

FIG. 1 shows an embodiment of conventional U-type piping (100) installed within the thermal storage body (500);

FIG. 2 shows an embodiment of conventional U-type piping (100) installed within the columnar thermal conductive body (300), wherein the columnar thermal conductive body (300) is placed within the thermal storage body (500);

FIG. 3 is a structural schematic view showing that two or more radially arranged U-type piping sections are installed within thermal conductive cylinder, and the thermal insulating structure is installed at where close to the peripheral of piping group with same flow direction which concentrates toward axial core, according to the present invention;

FIG. 4 is a section view of FIG. 3;

FIG. 5 is a structural schematic view of an embodiment showing that multiple sets of U-type piping jointly connects to the first fluid inlet and outlet terminal (1101) of the common piping (200) constituted by larger diameter piping installed at the core of the columnar thermal conductive body (300), according to the present invention;

FIG. 6 is a section view of FIG. 5;

FIG. 7 is a schematic view of an embodiment, showing that piping

segments of first fluid inlet and outlet terminal (101) and second fluid inlet and outlet terminal (102) in U-type wavy piping (600) are wavily arranged along the axial direction and near the edge of the columnar thermal conductive body (300), according to the present invention;

FIG. 8 is a section view of FIG. 7;

FIG. 9 is a schematic view of an embodiment, showing that the piping segment of the first fluid inlet and outlet terminal (101) in U-type wavy piping (600) is placed near the center of the columnar thermal conductive body (300), the piping segment between the second fluid inlet and outlet terminal (102) is placed near the periphery of the columnar thermal conductive body (300), and the U-type wavy piping (600) between the two piping segments is wavily arranged along the axial direction and near the edge of the columnar thermal conductive body (300), according to the present invention;

FIG. 10 is a section view of FIG. 9;

FIG. 11 is a schematic view of an embodiment, showing that the spiral piping segment of the first fluid inlet and outlet terminal (101) and the second fluid inlet and outlet terminal (102) in U-type spiral piping is spirally arranged along the axial direction and near the edge of the columnar thermal conductive body (300), according to the present invention; and

FIG. 12 is a section view of FIG. 11.

DESCRIPTION OF MAIN COMPONENT SYMBOLS

100 : U-type piping

101 : First fluid inlet and outlet terminal

102 : Second fluid inlet and outlet terminal

111 : Thermal conductive fluid

200 : Common piping

300 : Columnar thermal conductive body

400 : Thermal insulating device

500 : Thermal storage body

600 : U-type wavy piping

700 : Central piping of U-type spiral piping

800 : U-type spiral piping

1101 : First fluid inlet and outlet terminal

DETAILED DESCRIPTION OF THE PREFERED EMBODIMENTS

The present invention relates to a thermal conductive cylinder installed with U-type core piping and loop piping for being installed within the thermal storage body (500) composed of natural thermal storage body, such as shallow surface of the earth, or pool, lake, river, ocean, etc, or artifical objects in solid, or gaseous, or liquid state; wherein the thermal conductive cylinder installed with U-type core piping and loop piping is constructed through that the piping segments of fluid inlet terminal and/or outlet terminal of the U-type core piping and loop piping are directly made of thermal insulating material, or thermal insulating structure is installed between the inlet terminal and the outlet terminal; so as to prevent thermal energy loss because of thermal conduction between adjacent piping segments of inlet terminal and outlet terminal on the same side when thermal conductive fluid with temperature difference passing through.

As for the thermal conductive cylinder installed with U-type core piping and loop piping of the present invention, each of the U-type piping (100) is used for passing through one or more following thermal conductive fluid (111), including for passing through:

1) liquid state fluid;

2) gaseous state fluid;

3) liquid to gaseous state fluid; and

4) gaseous to liquid state fluid.

Traditionally, thermal energy loss often occurs in U-type piping device of U-type piping heat exchanger, because of thermal conduction by temperature difference between adjacent piping segments of fluid inlet terminal and fluid outlet terminal installed on the same side when fluid with temperature difference passing through, which is illustrated by examples as followings:

FIG. 1 shows an embodiment of conventional U-type piping (100) installed within the thermal storage body (500). When the thermal conductive fluid (111) passing through the piping segment of the first fluid inlet and outlet terminal (101) and the adjacent piping segment of the second fluid inlet and outlet terminal (102) respectively installed on the same side of the U-type piping (100) are in temperature difference, the two piping segments will produce thermal conduction and therefore result in thermal energy loss.

FIG. 2 shows an embodiment of conventional U-type piping (100) installed within the columnar thermal conductive body (300), wherein the columnar thermal conductive body (300) is placed within the thermal storage body (500).

When the columnar thermal conductive body (300) is installed at the thermal conductive cylinder installed with U-type core piping and loop piping of the thermal storage body (500) composed of natural thermal storage body, such as shallow surface of the earth, or pool, lake, river, ocean, etc, or artifical objects in solid, or gaseous, or liquid state, and the thermal conductive fluid (111) with temperature difference passes through the first fluid inlet and outlet terminal (101) and the second fluid inlet and outlet terminal (102) of the U-type piping, there will be thermal energy loss, because of thermal conduction between adjacent piping segments of the first fluid inlet and outlet terminal (101) and the second fluid inlet and outlet terminal (102) installed on the same side.

The present invention relates to a thermal conductive cylinder

installed with U-type core piping and loop piping for being installed within the thermal storage body (500) composed of natural thermal storage body, such as shallow surface of the earth, or pool, lake, river, ocean, etc, or artifical objects in solid, or gaseous, or liquid state; wherein the thermal conductive cylinder installed with U-type core piping and loop piping is constructed through that the piping segments of the U-type fluid piping inlet terminal and/or outlet terminal, which are radial U-type pipelines for passing thermal energy through each other, are directly made of thermal insulating material, or thermal insulating structure is installed between the inlet terminal and the outlet terminal; so as to prevent thermal energy loss because of thermal conduction between adjacent piping segments of inlet terminal and outlet terminal on the same side when thermal conductive fluid with temperature difference passing through.

FIG. 3 is a structural schematic view showing that two or more radially arranged U-type piping sections are installed within thermal conductive cylinder, and the thermal insulating structure is installed at where close to the peripheral of piping group with same flow direction which concentrates toward axial core, according to the present invention.

FIG. 4 is a section view of FIG. 3.

As shown in FIG. 3 and FIG. 4, the main components are as followings:

---U-type piping (100): made of U-type tubular body for the thermal conductive fluid (111) passing through, wherein the U-type piping (100) is used for being installed within the columnar thermal conductive body (300) composed of solid state or colloidal object; each of the U-type piping (100) has the first fluid inlet and outlet terminal (101) and the second fluid inlet and outlet terminal (102), the piping segments near the first fluid inlet and outlet terminal (101) are concentrated adjacent installed at the core of the columnar thermal conductive body (300), and the piping segments near the second fluid inlet and outlet terminal (102)

are radially arranged along the axial direction and near the edge of the columnar thermal conductive body (300);

---Columnar thermal conductive body (300): made of thermal conductive material, wherein the columnar thermal conductive body (300) has columnar structure with various geometric shape sections, such as circle, oval, square, rectangular, or star, for coating the U-type piping (100) and the thermal insulating device (400); and

---Thermal insulating device (400): related to thermal insulating structure constituted by the followings with thermal insulating effects, such as solid, flexible body, or foam, or enveloped colloid, gas, or liquid, or vacuum structure, for being placed between the piping segments near the first fluid inlet and outlet terminal (101) of each of the U-type piping (100), which are concentrated adjacent installed at the axial core of the columnar thermal conductive body (300), and the piping segments near the second fluid inlet and outlet terminal (102) of each of the U-type piping, or for being substituted by the piping segments near the first fluid inlet and outlet terminal (101) directly made of thermal insulating material or enveloped by thermal insulating material; by way of the above thermal insulating structure, for substantially reducing thermal energy loss caused by thermal conduction between adjacent piping segments of the first fluid inlet and outlet terminal (101) and the second fluid inlet and outlet terminal (102) on the same side of the U-type piping (100).

As for the thermal conductive cylinder installed with U-type core piping and loop piping of the present invention, it further can have multiple sets of U-type piping jointly connected to the first fluid inlet and outlet terminal (1101) of the common piping (200) constituted by larger diameter piping installed at the axial core of the columnar thermal conductive body (300), and be installed with the second fluid inlet and outlet terminal (102) in radially arrangement along the axial direction of the columnar thermal conductive body (300).

FIG. 5 is a structural schematic view of an embodiment showing that multiple sets of U-type piping jointly connects to the first fluid inlet and outlet terminal (1101) of the common piping (200), which is constituted by larger diameter piping and installed at the core of the columnar thermal conductive body (300), according to the present invention.

FIG. 6 is a section view of FIG. 5.

As shown in FIG. 5 and FIG. 6, it is mainly constituted by at least two U-type piping (100) for the thermal conductive fluid (111) passing through, wherein each of the U-type piping (100) is used for being installed within the columnar thermal conductive body (300) composed of solid state or colloidal object; each of the U-type piping (100) is jointly connected to the first fluid inlet and outlet terminal (1101) of common piping (200) which is constituted by larger diameter piping and installed at the axial core of the columnar thermal conductive body (300), and is installed with the second fluid inlet and outlet terminal (102) and piping segments radially arranged along the axial direction of the columnar thermal conductive body (300); the first fluid inlet and outlet terminal (1101) of common piping (200) is placed at the axial core of the columnar thermal conductive body (300), and is further installed with the thermal insulating device (400) between the piping segments near the second fluid inlet and outlet terminal (102) of each U-type piping (100), and the piping segments near the second fluid inlet and outlet terminal (102) of each U-type piping (100) are radially arranged along the axial direction and near the edge of the columnar thermal conductive body (300); and

---Columnar thermal conductive body (300): made of thermal conductive material, wherein the columnar thermal conductive body (300) has columnar structure with various geometric shape sections, such as circle, oval, square, rectangular, or star, for coating the U-type piping (100) and the thermal insulating device (400); and

---Thermal insulating device (400): related to thermal insulating

structure constituted by the followings with thermal insulating effects, such as solid, flexible body, or foam, or enveloped colloid, gas, or liquid, or vacuum structure, for being placed between the piping segments near the second fluid inlet and outlet terminal (102) of the U-type piping (100) and the piping segments near the first fluid inlet and outlet terminal (1101) of the common piping (200), or for being substituted by the piping segments near the first fluid inlet and outlet terminal (101) directly made of thermal insulating material or enveloped by thermal insulating material; by way of the above structure, for reducing thermal energy loss caused by thermal conduction between the piping segments of the first fluid inlet and outlet terminal (1101) of the common piping (200) and the second fluid inlet and outlet terminal (102).

FIG. 7 is a schematic view of an embodiment, showing that piping segments of first fluid inlet and outlet terminal (101) and second fluid inlet and outlet terminal (102) in U-type wavy piping (600) are wavily arranged along the axial direction and near the edge of the columnar thermal conductive body (300), according to the present invention.

FIG. 8 is a section view of FIG. 7.

As shown in FIG. 7 and FIG. 8, the main components are as followings:

---U-type wavy piping (600): made of U-type wavy pipe body for the thermal conductive fluid (111) passing through, wherein the U-type wavy piping (600) is used for being installed within the columnar thermal conductive body (300) composed of solid state or colloidal object; the feature is that the U-type wavy piping (600) is wavily placed around the axial direction and near the edge of the columnar thermal conductive body (300) with upper and lower wavy bending, and the both ends of the U-type wavy piping (600) have the first fluid inlet and outlet terminal (101) and the second fluid inlet and outlet terminal (102) which are interlinked;

---Columnar thermal conductive body (300): made of thermal conductive material, wherein the columnar thermal conductive body (300) has columnar structure with various geometric shape sections, such as circle, oval, square, rectangular, or star, for coating the U-type wavy piping (600) and the thermal insulating device (400); and

---Thermal insulating device (400): related to thermal insulating structure constituted by the followings with thermal insulating effects, such as solid, flexible body, or foam, or enveloped colloid, gas, or liquid, or vacuum structure, for being placed between the piping segments near the first fluid inlet and outlet terminal (101) of the U-type wavy piping (600), which are concentrated adjacent installed at the axial core of the columnar thermal conductive body (300), and the piping segments near the second fluid inlet and outlet terminal (102) of U-type wavy piping (600), or for being substituted by the piping segments near the first fluid inlet and outlet terminal (101) directly made of thermal insulating material or enveloped by thermal insulating material; by way of the above thermal insulating structure, for substantially reducing thermal energy loss caused by thermal conduction between adjacent piping segments of the first fluid inlet and outlet terminal (101) and the second fluid inlet and outlet terminal (102) on the same side of the U-type wavy piping (600).

FIG. 9 is a schematic view of an embodiment, showing that the piping segment of the first fluid inlet and outlet terminal (101) in U-type wavy piping (600) is placed near the center of the columnar thermal conductive body (300), the piping segment between the second fluid inlet and outlet terminal (102) is placed near the periphery of the columnar thermal conductive body (300), and the U-type wavy piping (600) between the two piping segments is wavily arranged along the axial direction and near the edge of the columnar thermal conductive body (300), according to the present invention.

FIG. 10 is a section view of FIG. 9.

As shown in FIG. 9 and FIG. 10, the main components are as followings:

---U-type wavy piping (600): made of U-type wavy pipe body for the thermal conductive fluid (111) passing through, wherein the U-type wavy piping (600) is used for being installed within the columnar thermal conductive body (300) composed of solid state or colloidal object; the feature is that the U-type wavy piping (600) is wavily placed around the axial direction and near the edge of the columnar thermal conductive body (300) with upper and lower wavy bending, the both ends of the U-type wavy piping (600) have the first fluid inlet and outlet terminal (101) and the second fluid inlet and outlet terminal (102) which are interlinked, in which the piping segment of the first fluid inlet and outlet terminal (101) is placed near the center of the columnar thermal conductive body (300), the piping segment between the second fluid inlet and outlet terminal (102) is placed near periphery of the columnar thermal conductive body (300), and the U-type wavy piping (600) between the two piping segments is wavily arranged along the axial direction and near the edge of the columnar thermal conductive body (300);

---Columnar thermal conductive body (300): made of thermal conductive material, wherein the columnar thermal conductive body (300) has columnar structure with various geometric shape sections, such as circle, oval, square, rectangular, or star, for coating the U-type wavy piping (600) and the thermal insulating device (400); and

---Thermal insulating device (400): related to thermal insulating structure constituted by the followings with thermal insulating effects, such as solid, flexible body, or foam, or enveloped colloid, gas, or liquid, or vacuum structure, for being placed between the piping segments near the first fluid inlet and outlet terminal (101) of the U-type wavy piping (600), which are concentrated adjacent installed at the axial core of the columnar thermal conductive body (300), and the piping segments near

the second fluid inlet and outlet terminal (102) of U-type wavy piping (600), or for being substituted by the piping segments near the first fluid inlet and outlet terminal (101) directly made of thermal insulating material or enveloped by thermal insulating material; by way of the above thermal insulating structure, for substantially reducing thermal energy loss caused by thermal conduction between adjacent piping segments of the first fluid inlet and outlet terminal (101) and the second fluid inlet and outlet terminal (102) on the same side of the U-type wavy piping (600).

FIG. 11 is a schematic view of an embodiment, showing that the spiral piping segment of the first fluid inlet and outlet terminal (101) and the second fluid inlet and outlet terminal (102) in U-type spiral piping is spirally arranged along the axial direction and near the edge of the columnar thermal conductive body (300), according to the present invention.

FIG. 12 is a section view of FIG. 11.

As shown in FIG. 11 and FIG. 12, the main components are as followings:

---U-type spiral piping (800): made of U-type spiral pipe body for the thermal conductive fluid (111) passing through, wherein the U-type spiral piping (800) is used for being installed within the columnar thermal conductive body (300) composed of solid state or colloidal object; the feature is that the U-type spiral piping (800) is spirally placed around the axial direction and near the edge of the columnar thermal conductive body (300), and the both ends of the U-type spiral piping (800) have the first fluid inlet and outlet terminal (101) and the second fluid inlet and outlet terminal (102) which are interlinked, in which the first fluid inlet and outlet terminal (101) placed at the top end of the center of the spiral structure directly leads to the bottom of the U-type spiral piping (800) via the central piping of U-type spiral piping (700), and the second fluid inlet and outlet terminal (102) is placed at the top end of the U-type spiral

piping (800) spirally up its own run;

---Columnar thermal conductive body (300): made of thermal conductive material, wherein the columnar thermal conductive body (300) has columnar structure with various geometric shape sections, such as circle, oval, square, rectangular, or star, for coating the U-type spiral piping (800) and the thermal insulating device (400); and

---Thermal insulating device (400): related to thermal insulating structure constituted by the followings with thermal insulating effects, such as solid, flexible body, or foam, or enveloped colloid, gas, or liquid, or vacuum structure, wherein the piping segment of the central piping the U-type spiral piping (700) of the U-type spiral piping (800), which is placed at the axial core of the columnar thermal conductive body (300) and leads up to the first fluid inlet and outlet terminal (101), is directly made of thermal insulating material or enveloped by thermal insulating material, or the thermal insulating device (400) is placed between the U-type spiral piping (800) around and near the edge of the columnar thermal conductive body (300) spirally up its own run leading to the second fluid inlet and outlet terminal (102) and the piping segment of the central piping of U-type spiral piping (700); by way of the above thermal insulating device (400), for substantially reducing thermal energy loss caused by thermal conduction between the central piping of U-type spiral piping (700) installed at the center of the bottom of the same U-type spiral piping (800) leading up to the first fluid inlet and outlet terminal (101), and the U-type spiral piping (800) leading to the second fluid inlet and outlet terminal (102).

What is claimed is:

1. A thermal conductive cylinder for installation within a thermal storage body composed of a natural thermal storage body, the natural thermal storage body including one of a shallow surface of the earth, a body of water, and artificial objects in a solid, gaseous, or liquid state;

wherein the thermal conductive cylinder is installed with a plurality of U-type core piping and constructed so that a thermal insulation is present between a fluid inlet terminal and a fluid outlet terminal of each of the plurality of U-type piping so as to prevent thermal energy loss because of thermal conduction between adjacent piping segments of the inlet terminal and the outlet terminal on a same side when thermal conductive fluid with a temperature difference passes through;

wherein each of the plurality of U-type piping is used for one or more of the following types of thermal conductive fluid passing through, including:

1) liquid state fluid;

2) gaseous state fluid;

3) liquid to gaseous state fluid; and

4) gaseous to liquid state fluid,

wherein two or more radially arranged sections of the U-type piping are installed within the thermal conductive cylinder and the two or more radially arranged sections of the U-type piping are discrete from and have interior flowpaths that are not in communication with each other within the thermal conductive cylinder; and

wherein main components of the thermal conductive cylinder are as follows:

the plurality of U-type piping: each made of a U-type tubular body for the thermal conductive fluid to pass through, wherein the plurality of U-type piping is installed within a columnar thermal conductive body composed of solid state or colloidal object; each of the U-type piping has a separate first fluid inlet and outlet terminal and a separate second fluid inlet and outlet terminal, the piping segments near the first fluid inlet and outlet terminal are adjacently installed at an axial core of the columnar thermal conductive body, and the piping segments near the second fluid inlet and outlet terminal are radially arranged along an axial direction and near an edge of the columnar thermal conductive body;

the columnar thermal conductive body made of thermal conductive material, wherein the columnar thermal conductive body has a columnar structure with various geometric shape sections, for coating the U-type piping and a thermal insulating device; and

the thermal insulating device made of a thermal insulating structure with thermal insulating effects, the thermal insulating structure including one of a solid body, a flexible body, a foam body, and an enveloped colloid, gas, liquid, or vacuum structure, for being placed between the piping segments near the first fluid inlet and outlet terminal of each of the U-type piping that are adjacently installed at the axial core of the columnar thermal conductive body, and the piping segments near the second fluid inlet and outlet terminal of each of the U-type piping and for substantially reducing thermal energy loss caused by thermal conduction between adjacent piping segments of the first fluid inlet and outlet terminal and the second fluid inlet and

outlet terminal on the same side of the U-type piping.

2. A thermal conductive cylinder for installation within a thermal storage body composed of a natural thermal storage body, the natural thermal storage body including one of a shallow surface of the earth, a body of water, and artificial objects in a solid, gaseous, or liquid state;

wherein the thermal conductive cylinder is installed with a plurality of U-type core piping and constructed so that a thermal insulation is present between a fluid inlet terminal and a fluid outlet terminal of each of the plurality of U-type piping so as to prevent thermal energy loss because of thermal conduction between adjacent piping segments of the inlet terminal and the outlet terminal on a same side when thermal conductive fluid with a temperature difference passes through;

wherein each of the plurality of U-type piping is used for one or more of the following types of thermal conductive fluid passing through, including:

1) liquid state fluid;

2) gaseous state fluid;

3) liquid to gaseous state fluid; and

4) gaseous to liquid state fluid,

wherein two or more radially arranged U-type piping sections are installed within the thermal conductive cylinder and the two or more radially arranged U-type piping sections are completely discrete from and have interior flowpaths that are not in communication with each other within the thermal conductive cylinder; and

wherein main components of the thermal conductive cylinder are as follows:

the plurality of U-type piping each made of a U-type tubular body for the thermal conductive fluid to pass through, wherein the plurality of U-type piping is installed within a columnar thermal conductive body composed of solid state or colloidal object;

each of the U-type piping has a separate first fluid inlet and outlet terminal and a separate second fluid inlet and outlet terminal, the piping segments near the first fluid inlet and outlet terminal are adjacently installed at an axial core of the columnar thermal conductive body, and the piping segments near the second fluid inlet and outlet terminal are radially arranged along an axial direction and near an edge of the columnar thermal conductive body; and

the columnar thermal conductive body made of thermal conductive material, wherein the columnar thermal conductive body has a columnar structure with various geometric shape sections, for coating the U-type piping.

3. A thermal conductive cylinder for installation within a thermal storage body composed of a natural thermal storage body, the natural thermal storage body including one of a shallow surface of the earth, a body of water, and artificial objects in a solid, gaseous, or liquid state;

wherein the thermal conductive cylinder is installed with a plurality of U-type core piping and constructed so that a thermal insulation is present between a fluid inlet terminal and a fluid outlet terminal of each of the plurality of U-type piping so as to prevent thermal energy loss because of thermal conduction between adjacent piping segments of the inlet terminal and the outlet terminal on a same side when thermal conductive fluid with a

temperature difference passes through;

wherein each of the plurality of U-type piping is used for one or more of the following types of thermal conductive fluid passing through, including:

1) liquid state fluid;

2) gaseous state fluid;

3) liquid to gaseous state fluid; and

4) gaseous to liquid state fluid,

wherein two or more radially arranged U-type piping sections are installed within the thermal conductive cylinder and the two or more radially arranged U-type piping sections are discrete from and have interior flowpaths that are not in communication with each other within the thermal conductive cylinder; and

wherein main components of the thermal conductive cylinder are as follows:

the plurality of U-type piping each made of a U-type tubular body for the thermal conductive fluid to pass through, wherein each of the U-type piping has a separate first fluid inlet and outlet terminal and a separate second fluid inlet and outlet terminal, the piping segments near the first fluid inlet and outlet terminal are adjacently installed, and the piping segments near the second fluid inlet and outlet terminal are radially arranged along an axial direction; and

a thermal insulating device made of a thermal insulating structure with thermal insulating effects, the thermal insulating structure including one of a solid body, a flexible body, a foam body, and an enveloped colloid, gas, liquid, or vacuum structure, for being placed between the

piping segments near the first fluid inlet and outlet terminal of each of the U-type piping and the piping segments near the second fluid inlet and outlet terminal of each of the U-type piping and for substantially reducing thermal energy loss caused by thermal conduction between adjacent piping segments of the first fluid inlet and outlet terminal and the second fluid inlet and outlet terminal on the same side of the U-type piping.

4. A thermal conductive cylinder as claimed in claim 3, wherein the first fluid inlet and outlet terminal of each of the U-type piping are adjacent each other and sections of said respective U-type piping extending from the first fluid inlet and outlet terminal are surrounded by the thermal insulating device.

5. A thermal conductive cylinder for installation within a thermal storage body composed of a natural thermal storage body, the natural thermal storage body including one of a shallow surface of the earth, a body of water, and artificial objects in a solid, gaseous, or liquid state;

wherein the thermal conductive cylinder is installed with piping and constructed so that a thermal insulation is present between a fluid inlet terminal and a fluid outlet terminal of the piping so as to prevent thermal energy loss because of thermal conduction between adjacent piping segments of the inlet terminal and the outlet terminal on a same side when thermal conductive fluid with a temperature difference passes through;

wherein the piping is used for one or more of the following types of thermal conductive fluid passing through, including:

1) liquid state fluid;

2) gaseous state fluid;

3) liquid to gaseous state fluid; and

4) gaseous to liquid state fluid,

wherein the piping includes first segments respectively extending from a first fluid inlet and outlet terminal and a second fluid inlet and outlet terminal, and a wavy segment extending between the respective first segments of the piping; and

wherein main components of the thermal conductive cylinder are as follows:

the piping made of a tubular body for the thermal conductive fluid to pass through, wherein the piping has a first fluid inlet and outlet terminal and a second fluid inlet and outlet terminal, the piping segments near the first fluid inlet and outlet terminal are adjacently installed, and the piping segments near the second fluid inlet and outlet terminal are radially arranged along an axial direction; and

a thermal insulating device made of a thermal insulating structure with thermal insulating effects, the thermal insulating structure including one of a solid body, a flexible body, a foam body, and an enveloped colloid, gas, liquid, or vacuum structure, for being placed between the piping segment near the first fluid inlet and outlet terminal and the piping segment near the second fluid inlet and outlet terminal and for substantially reducing thermal energy loss caused by thermal conduction between adjacent piping segments of the first fluid inlet and outlet terminal and the second fluid inlet and outlet terminal on the same side of the piping.

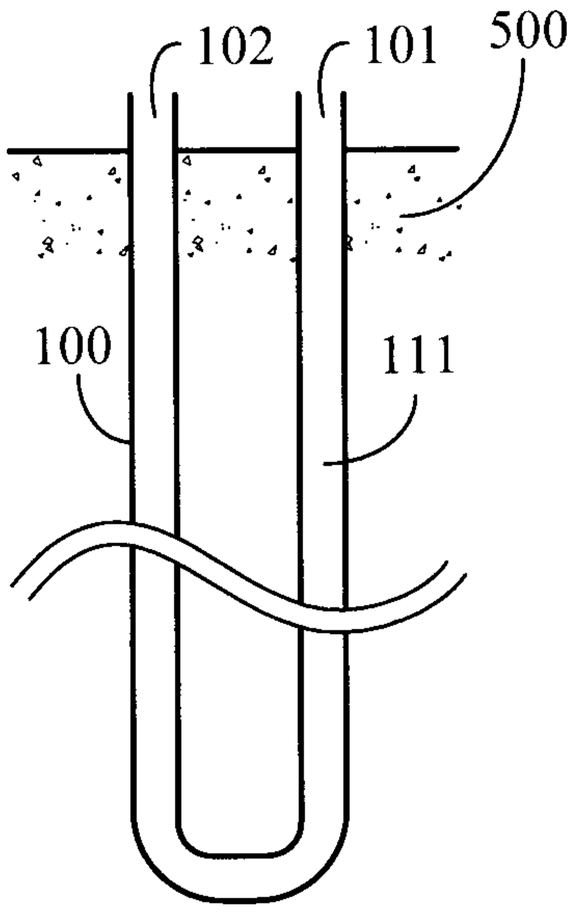

Fig. 1 (Prior Art)

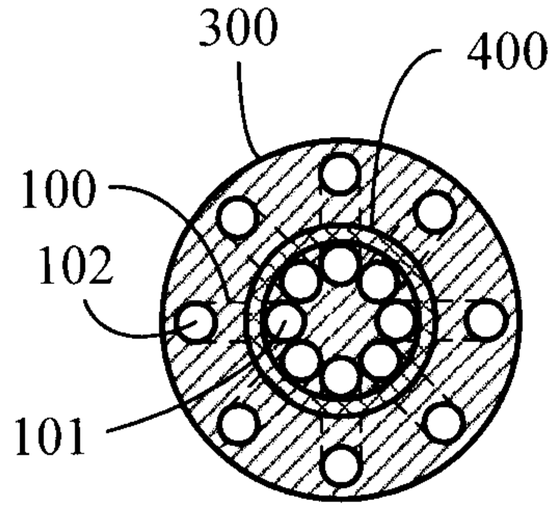

Fig. 3

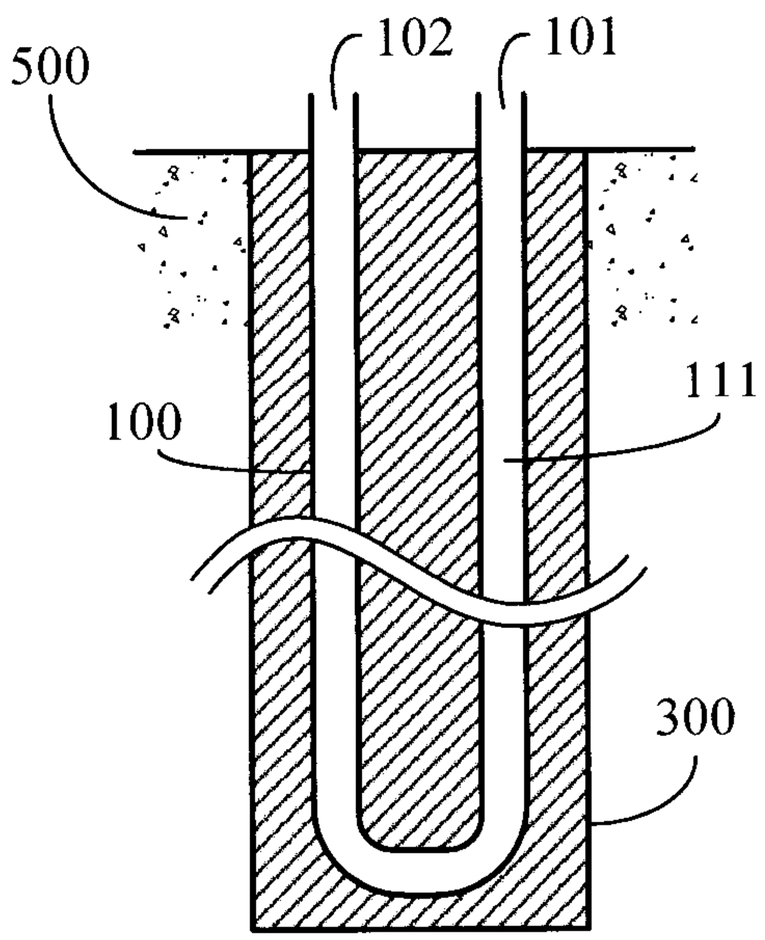

Fig. 2 (Prior Art)

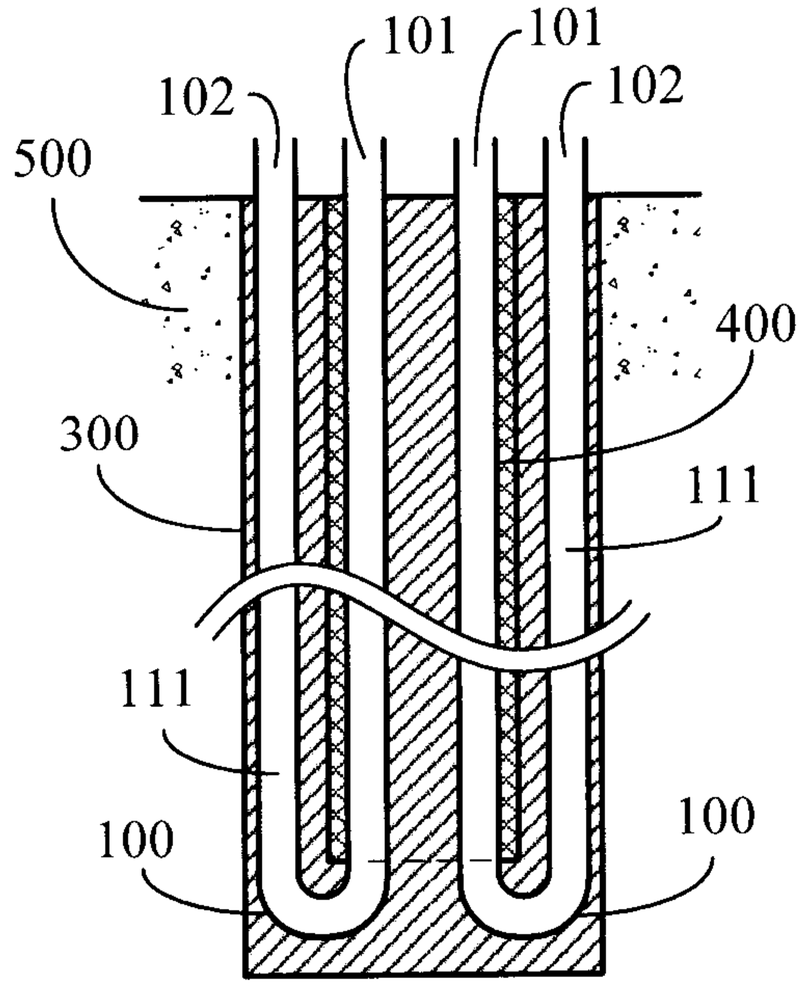

Fig. 4

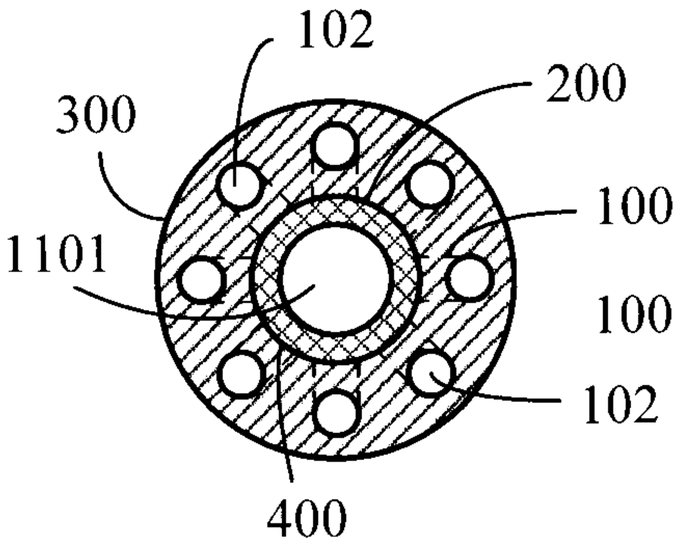

Fig. 5

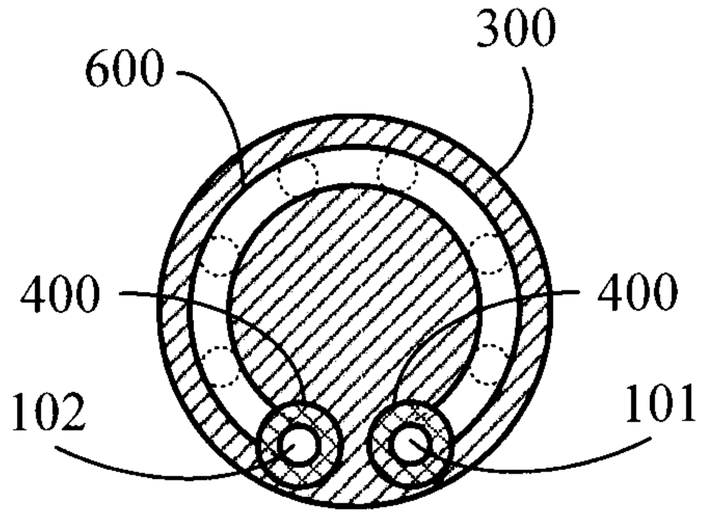

Fig. 7

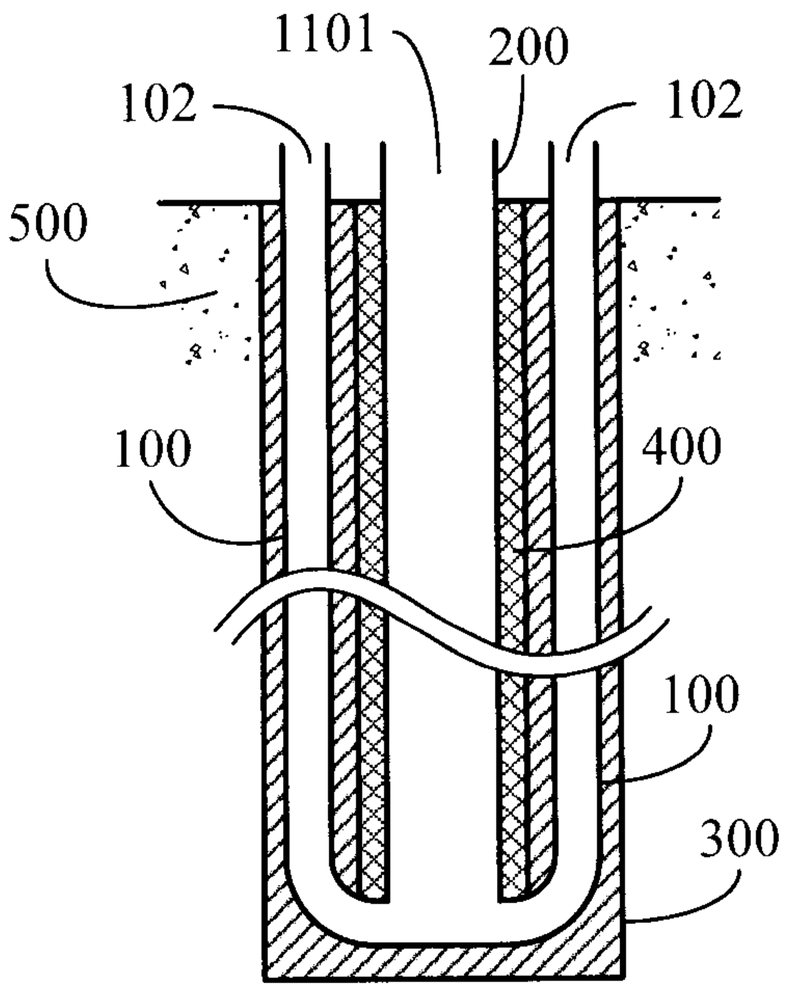

Fig. 6

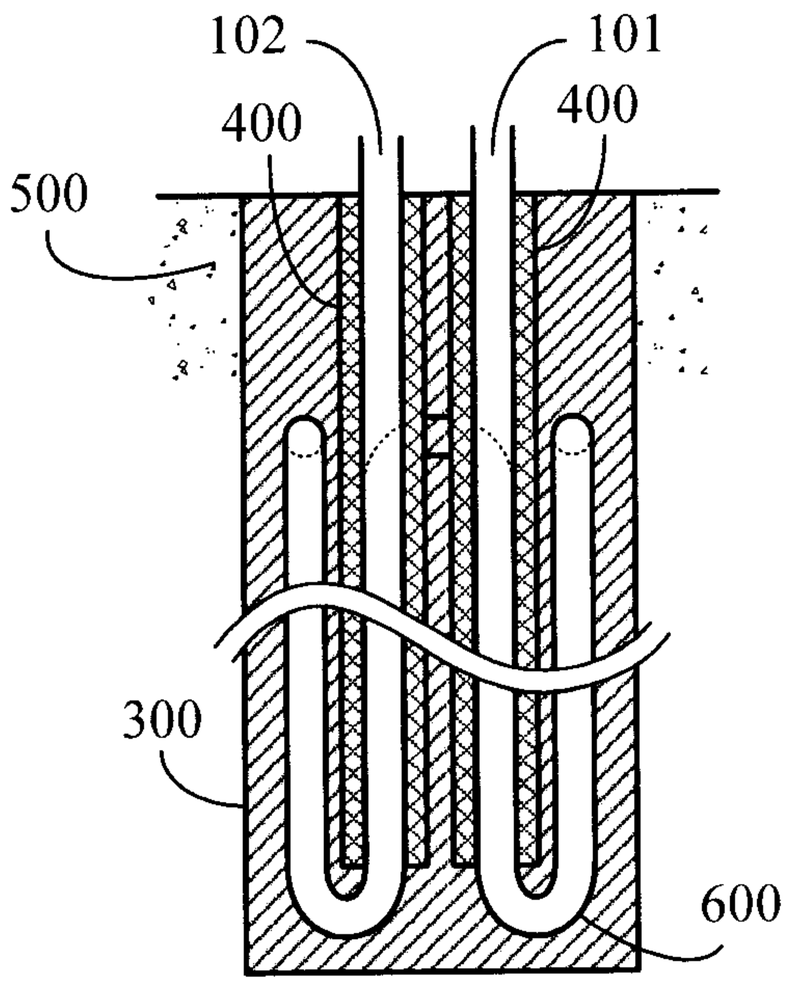

Fig. 8

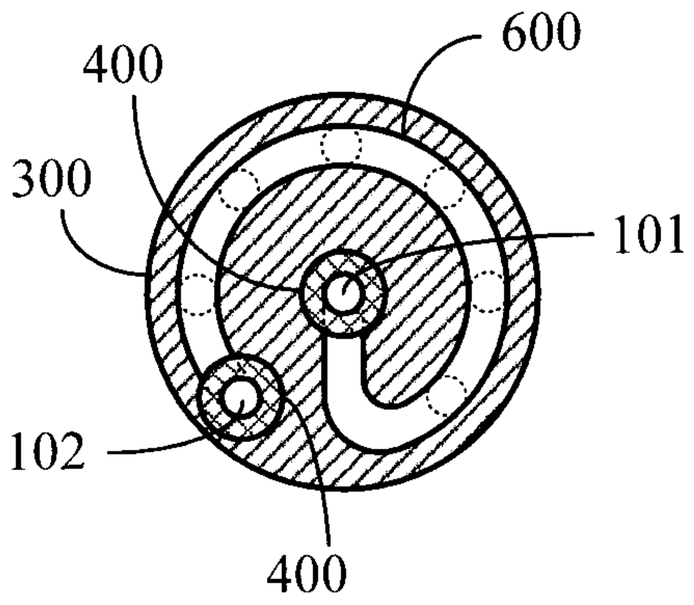

Fig. 9

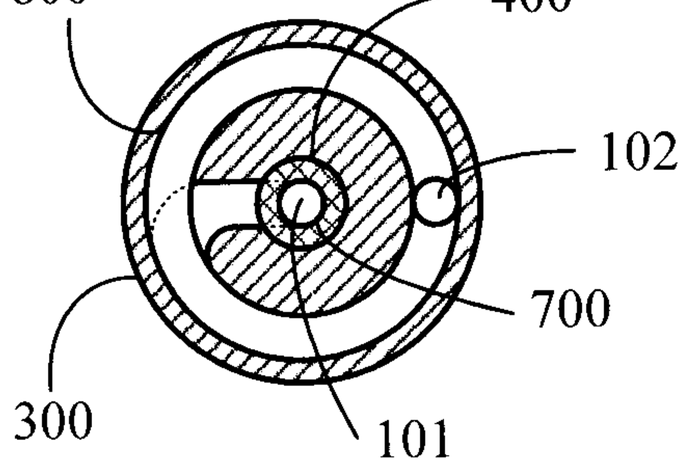

Fig. 11

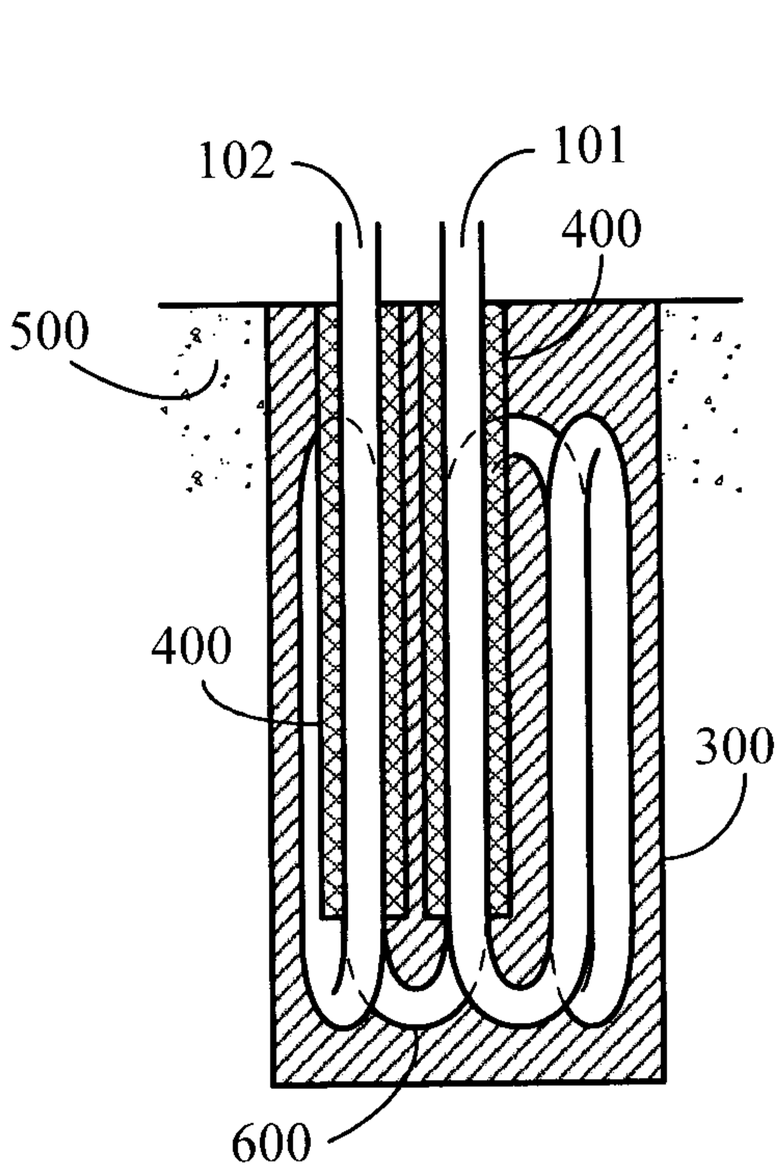

Fig. 10

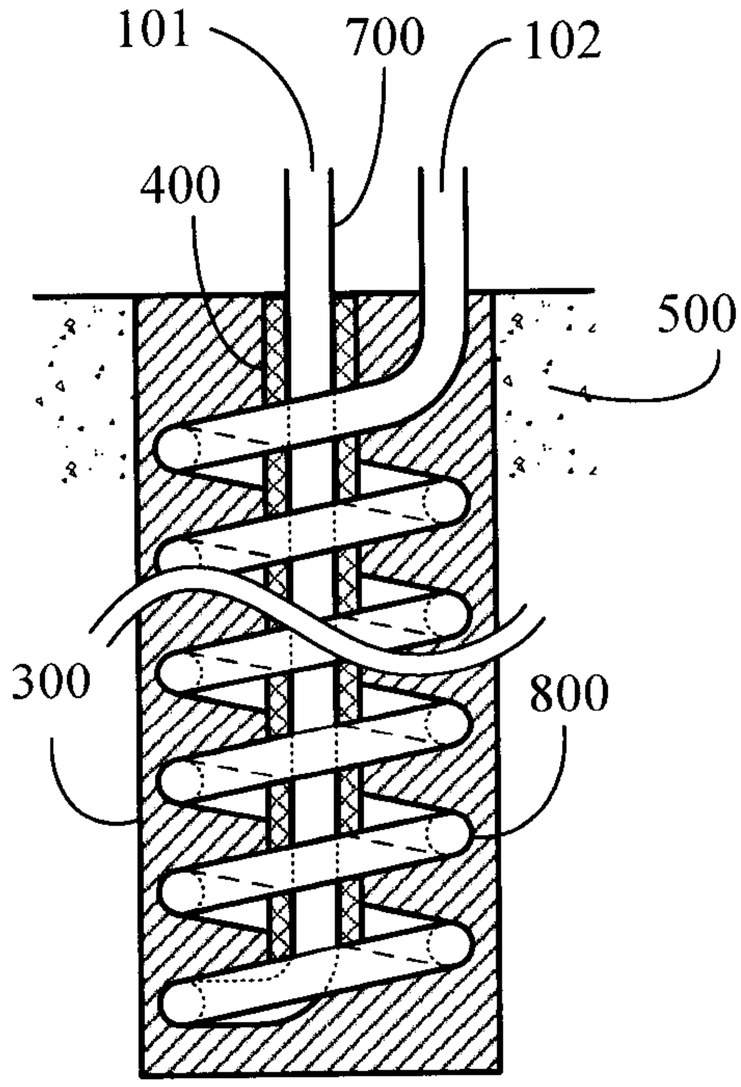

Fig. 12

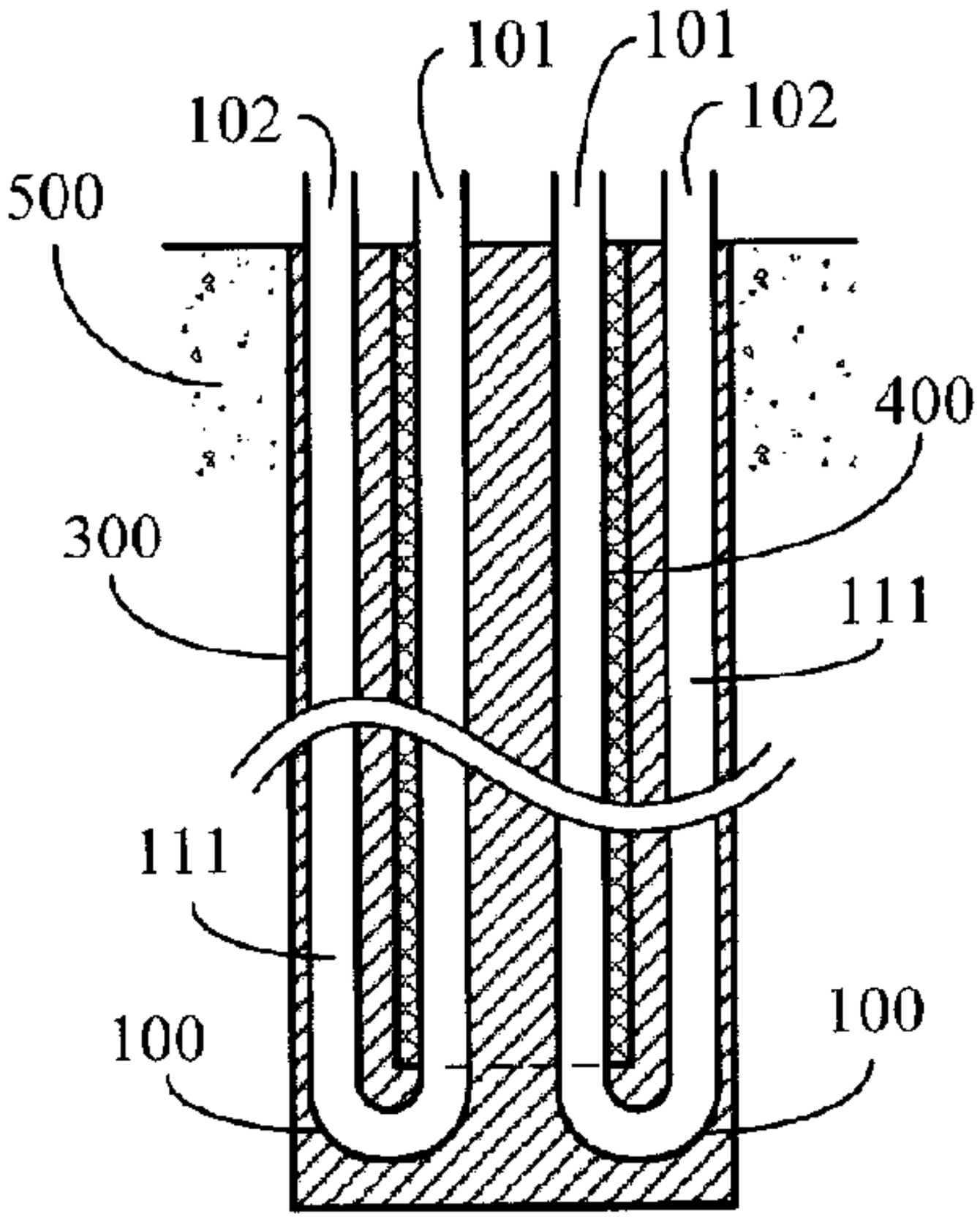
101
101
102
102
500
400
300
111
111
100
100