US00D646037S

(12) United States Design Patent

Arthurson

(10) Patent No.: US D646,037 S
(45) Date of Patent: ** Sep. 27, 2011

(54) **WASTE BIN WITH TWISTING LID OPENER**

(76) Inventor: **Kingsley Arthurson**, Perth (AU)

(**) Term: **14 Years**

(21) Appl. No.: **29/380,977**

(22) Filed: **Dec. 14, 2010**

(30) **Foreign Application Priority Data**

Jun. 16, 2010 (AU) 12500/2010

(51) **LOC (9) Cl.** **09-09**

(52) **U.S. Cl.** **D34/9**; D34/5

(58) **Field of Classification Search** ..... D34/1–11; 220/908, 908.1, 625, DIG. 12, DIG. 14; 280/47.26
See application file for complete search history.

(56) **References Cited**

U.S. PATENT DOCUMENTS

3,825,150	A *	7/1974	Taylor	220/495.08
4,753,367	A *	6/1988	Miller et al.	220/495.11
D313,491	S *	1/1991	Edelhoff et al.	D34/5
5,160,063	A *	11/1992	Bailey	220/495.08
5,184,836	A *	2/1993	Andrews et al.	280/79.5
D355,741	S *	2/1995	Craft et al.	D34/5
5,445,397	A *	8/1995	Evans	280/47.18
D445,228	S *	7/2001	Apps et al.	D34/5
6,918,508	B2 *	7/2005	Hwang	220/826
6,953,199	B2 *	10/2005	Malloy, III	280/47.26
D535,448	S *	1/2007	Kilduff et al.	D34/5
D624,723	S *	9/2010	Raghunathan et al.	D34/5
D634,912	S *	3/2011	Pouliot et al.	D34/11

* cited by examiner

Primary Examiner — Cynthia Ramirez
(74) *Attorney, Agent, or Firm* — Shoemaker and Mattare

(57) **CLAIM**

The ornamental design for a waste bin with twisting lid opener, as shown and described.

DESCRIPTION

FIG. **1** is top plan view of a waste bin with twisting lid opener, showing my new design,
FIG. **2** is a perspective view thereof, from the front, top and left side,
FIG. **3** is a perspective view thereof, with its lid open, from the front, top and left side,
FIG. **4** is a perspective view thereof, from the front, top and left side,
FIG. **5** is a perspective view thereof, from the bottom, rear and right side,
FIG. **6** is a front elevational view thereof, with its lid closed,
FIG. **7** is a front elevational view thereof, with the lid partly open,
FIG. **8** is a front elevational view thereof, with the lid fully open,
FIG. **9** is a left side view thereof, with the lid closed
FIG. **10** is a left side view thereof, with the lid partly open; and,
FIG. **11** is a left side view thereof, with the lid fully open.

1 Claim, 11 Drawing Sheets

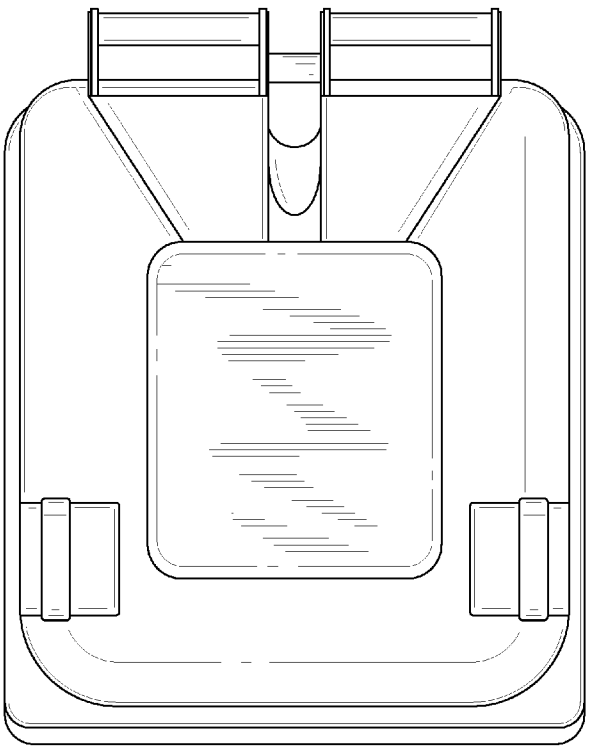

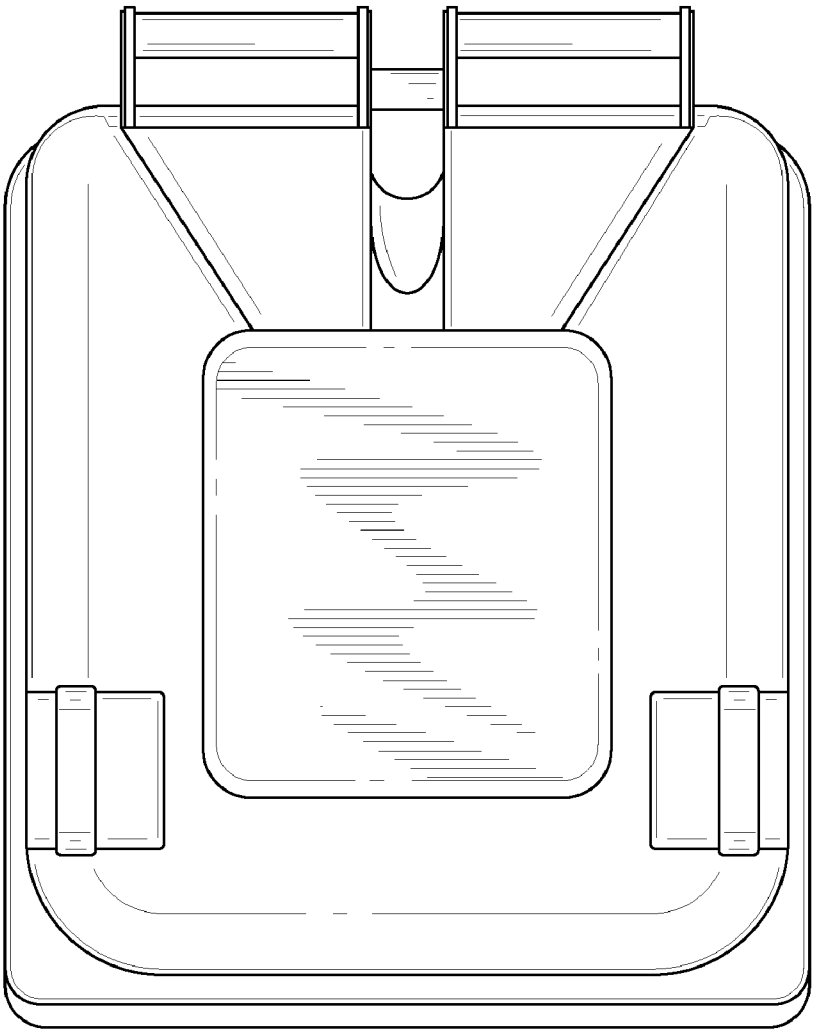

Fig. 1

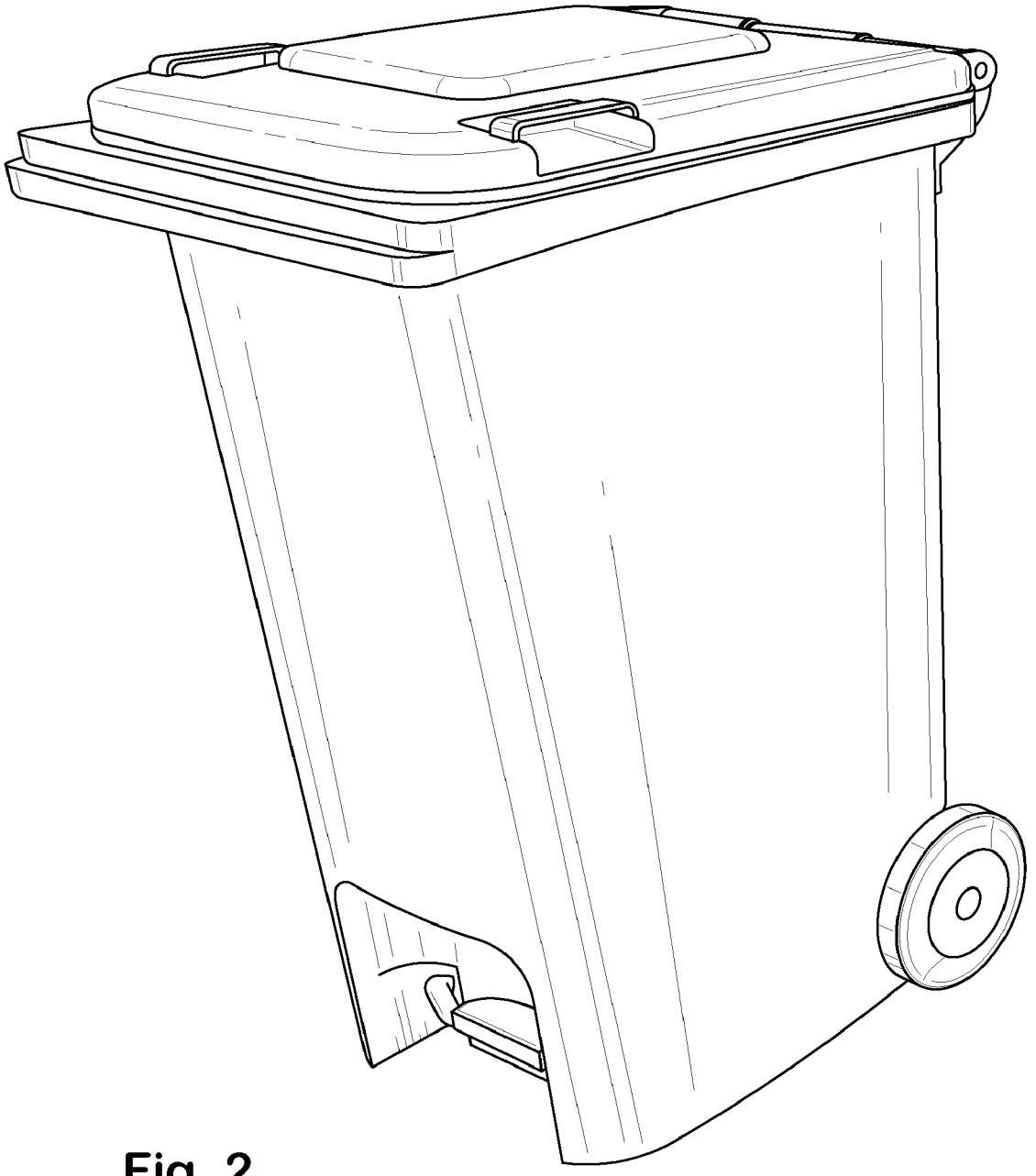

Fig. 2

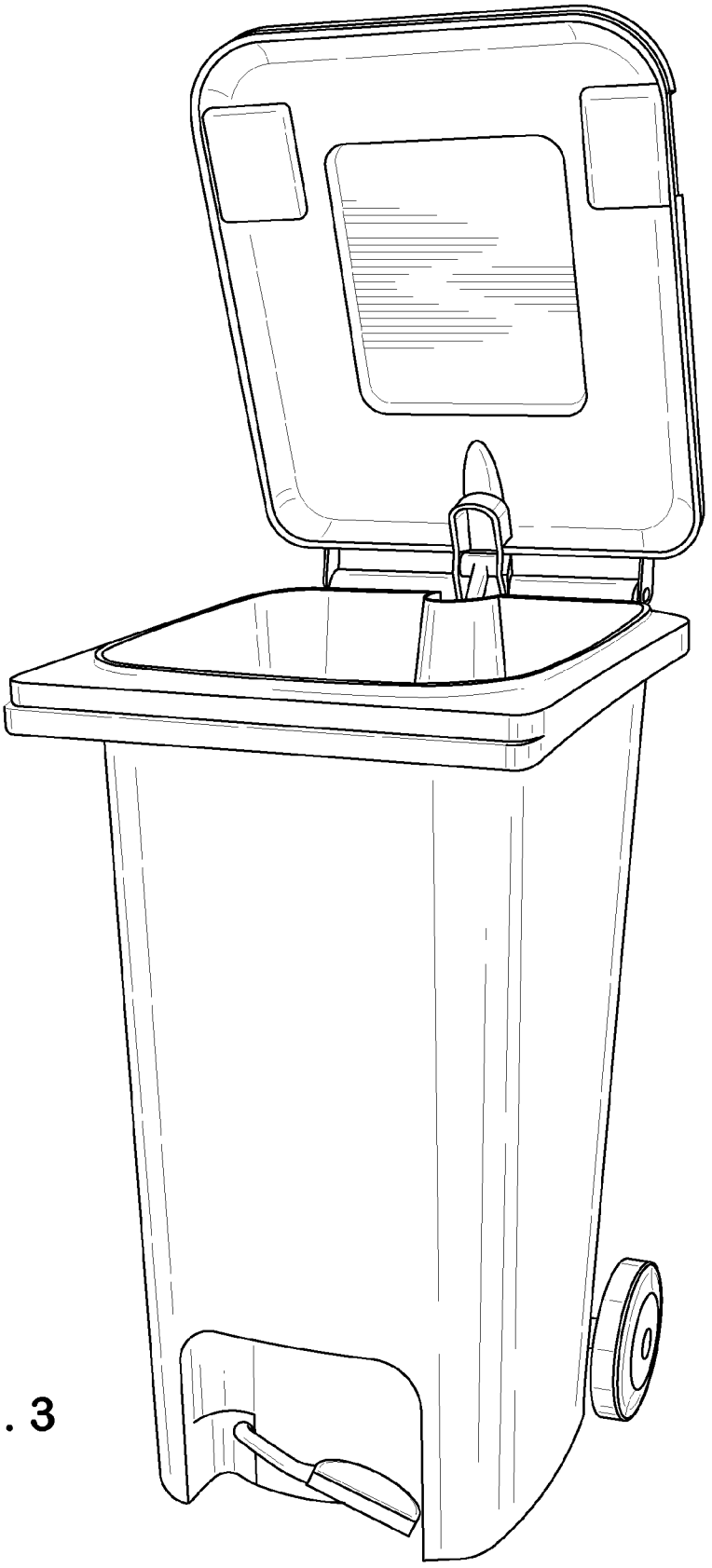

Fig. 3

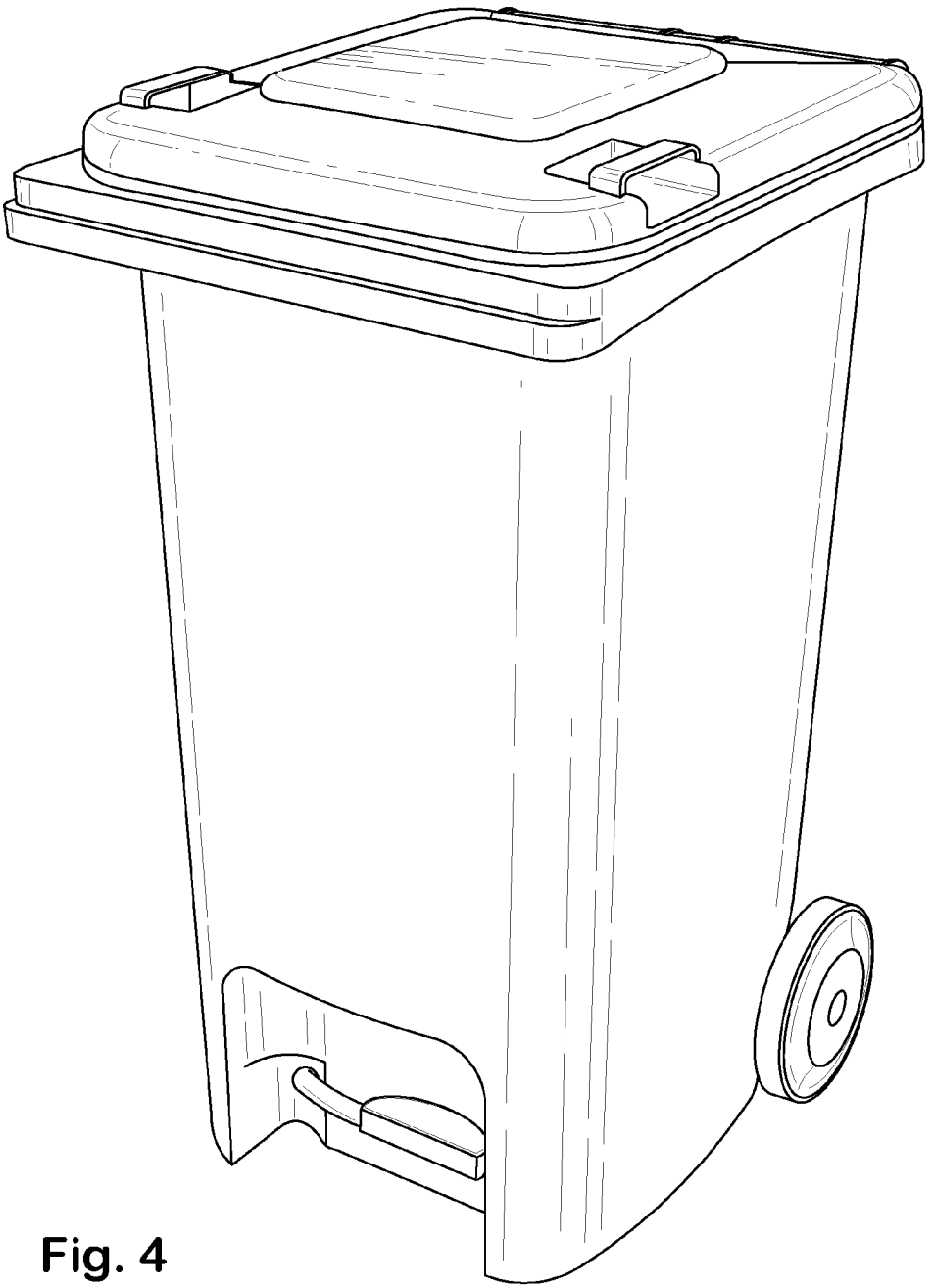

Fig. 4

Fig. 5

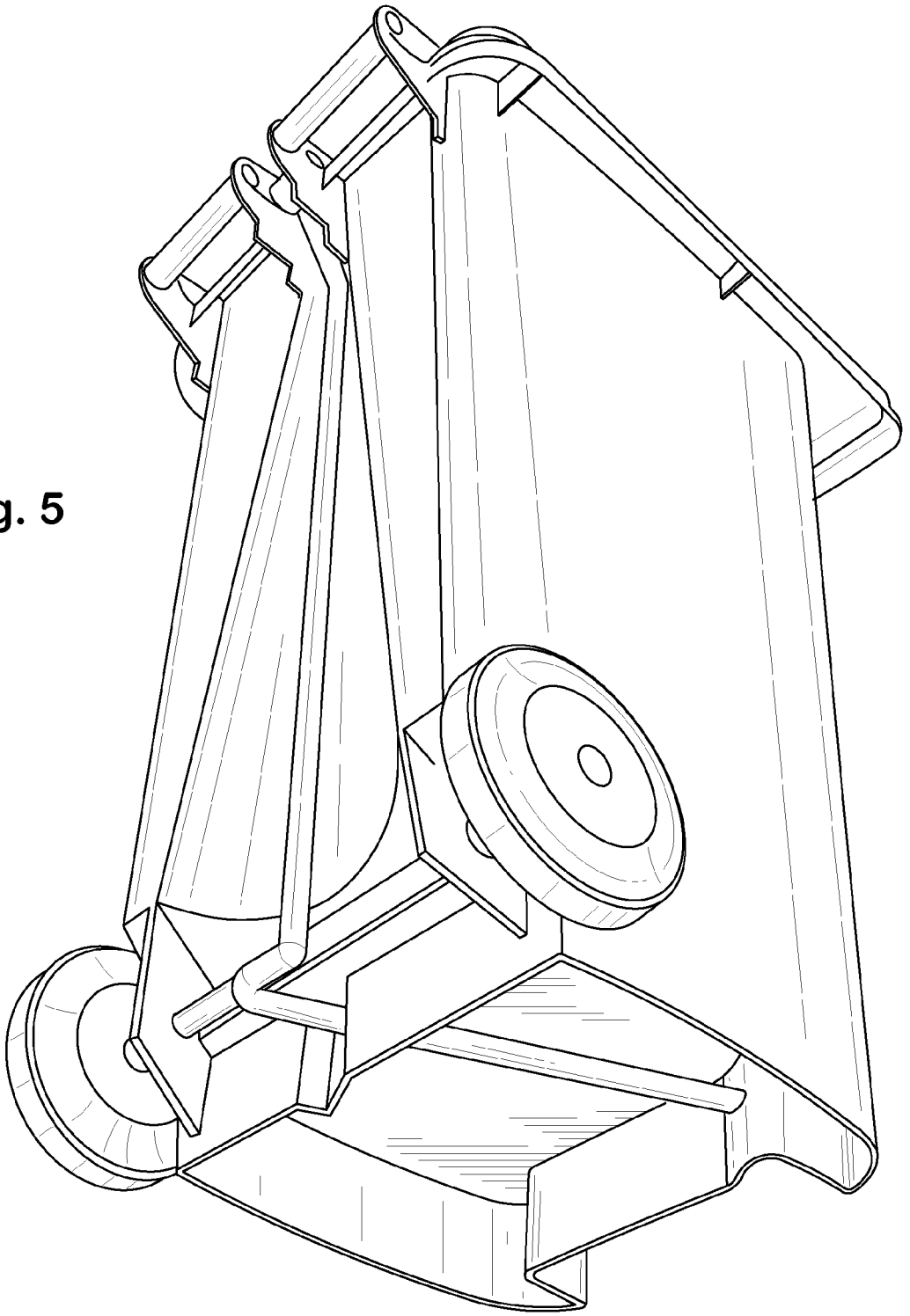

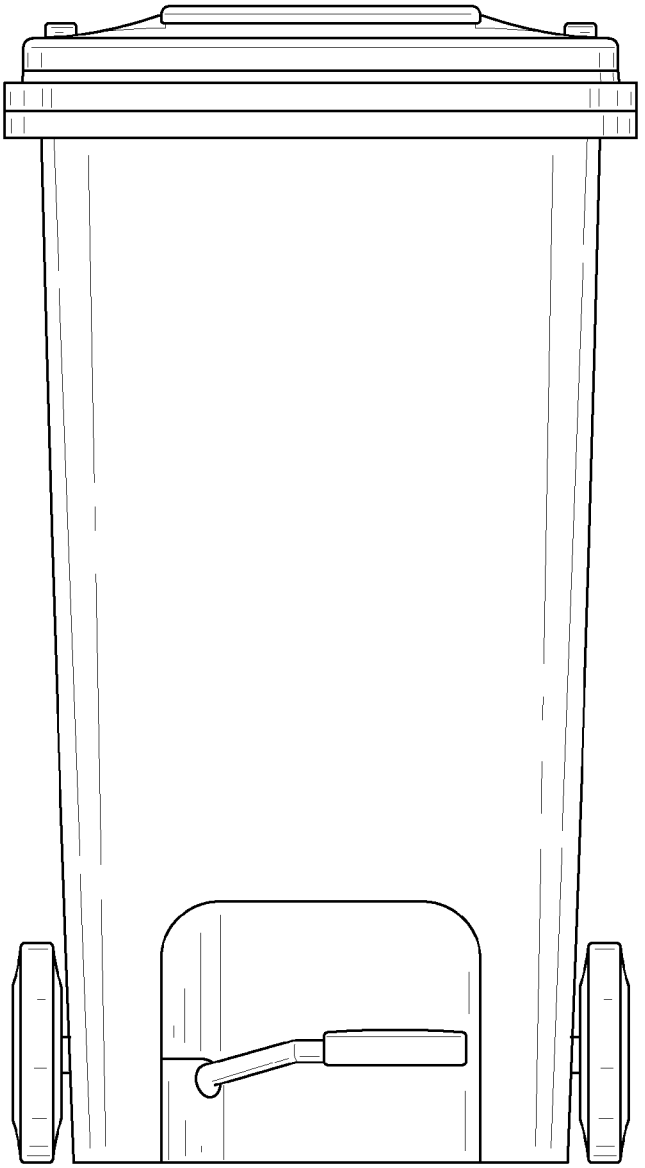

Fig. 6

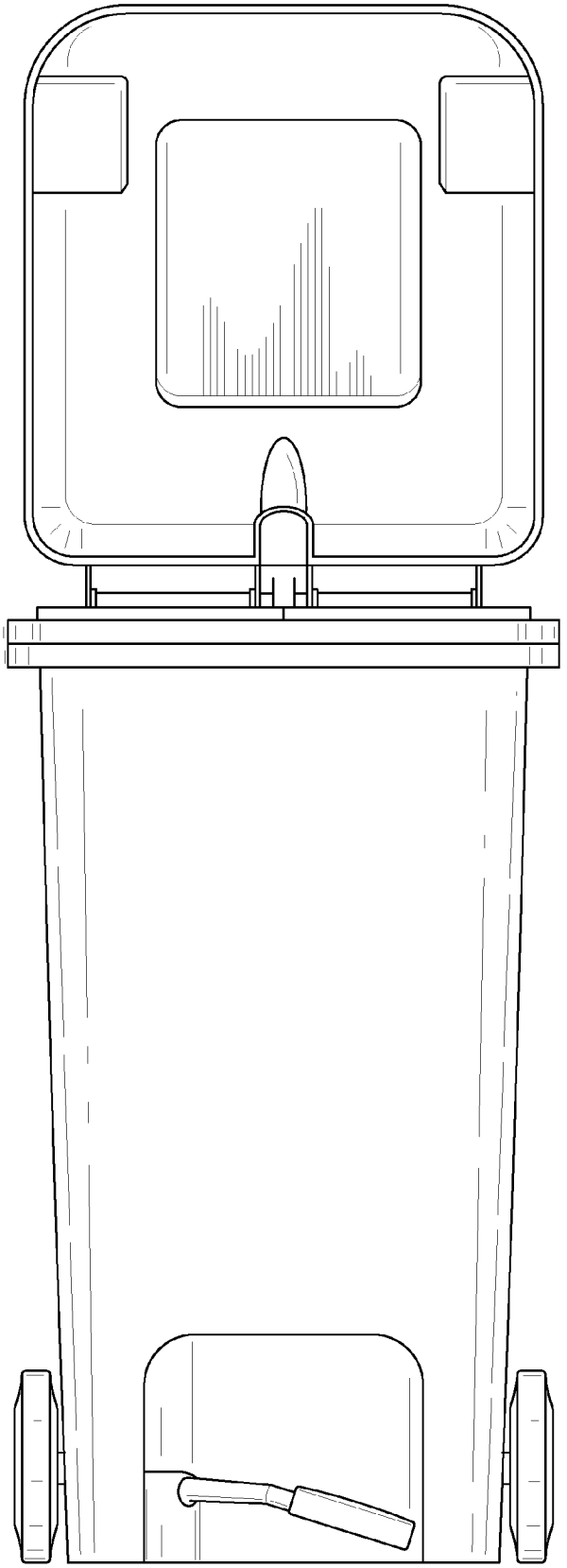

Fig. 7

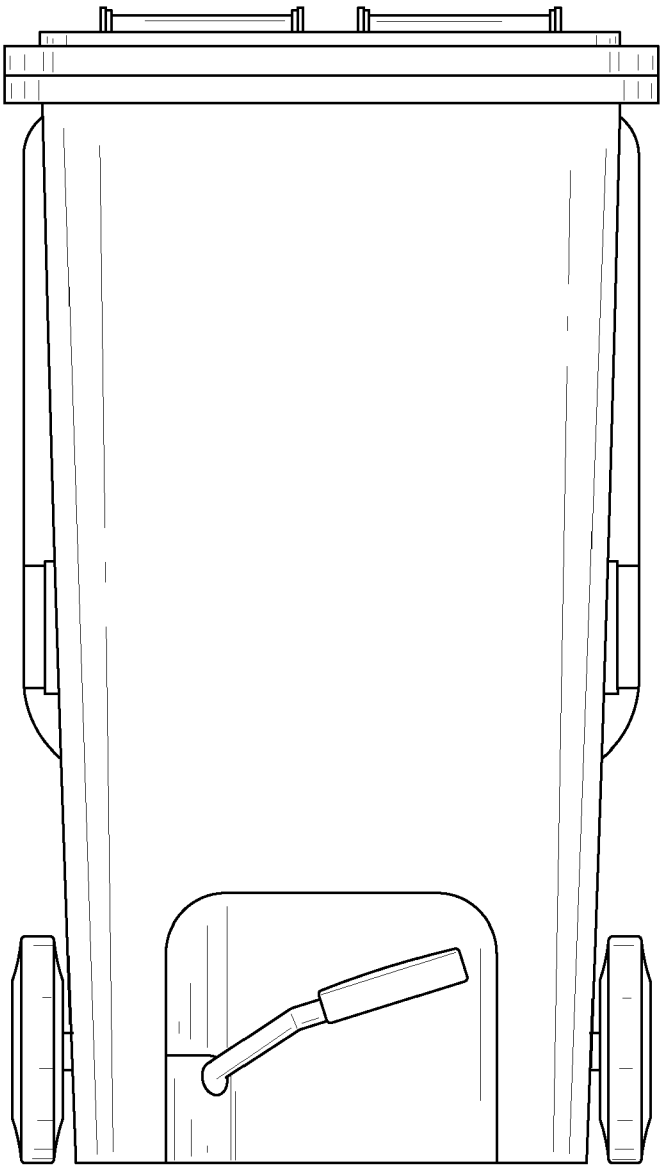

Fig. 8

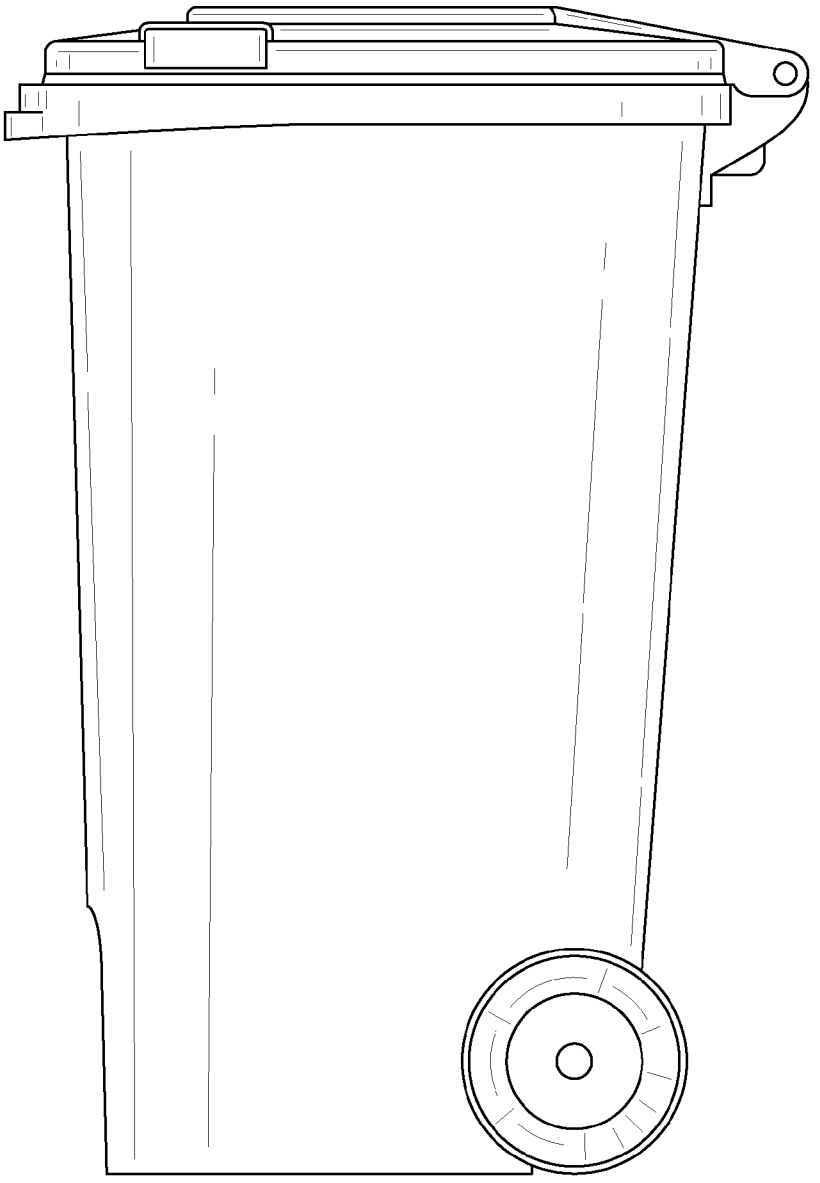

Fig. 9

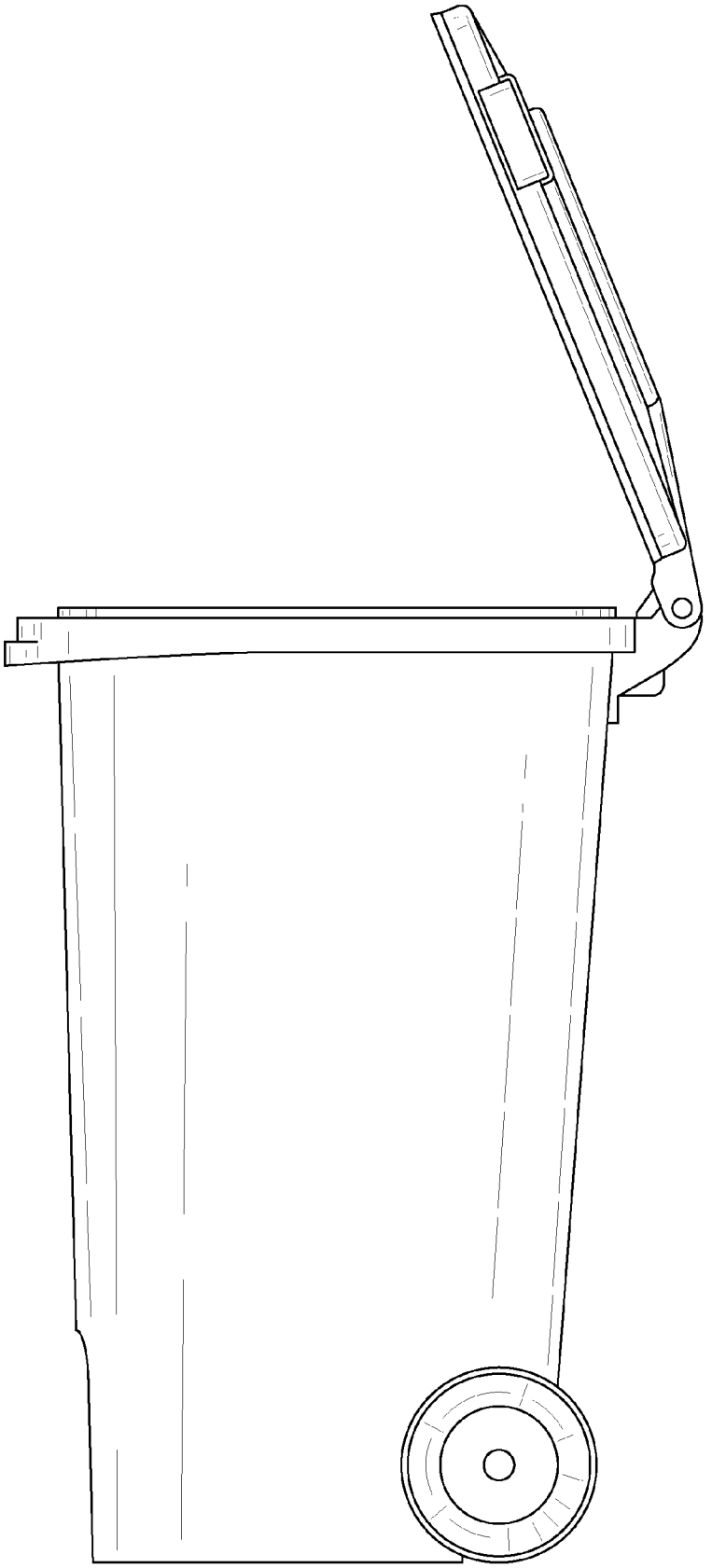

Fig. 10

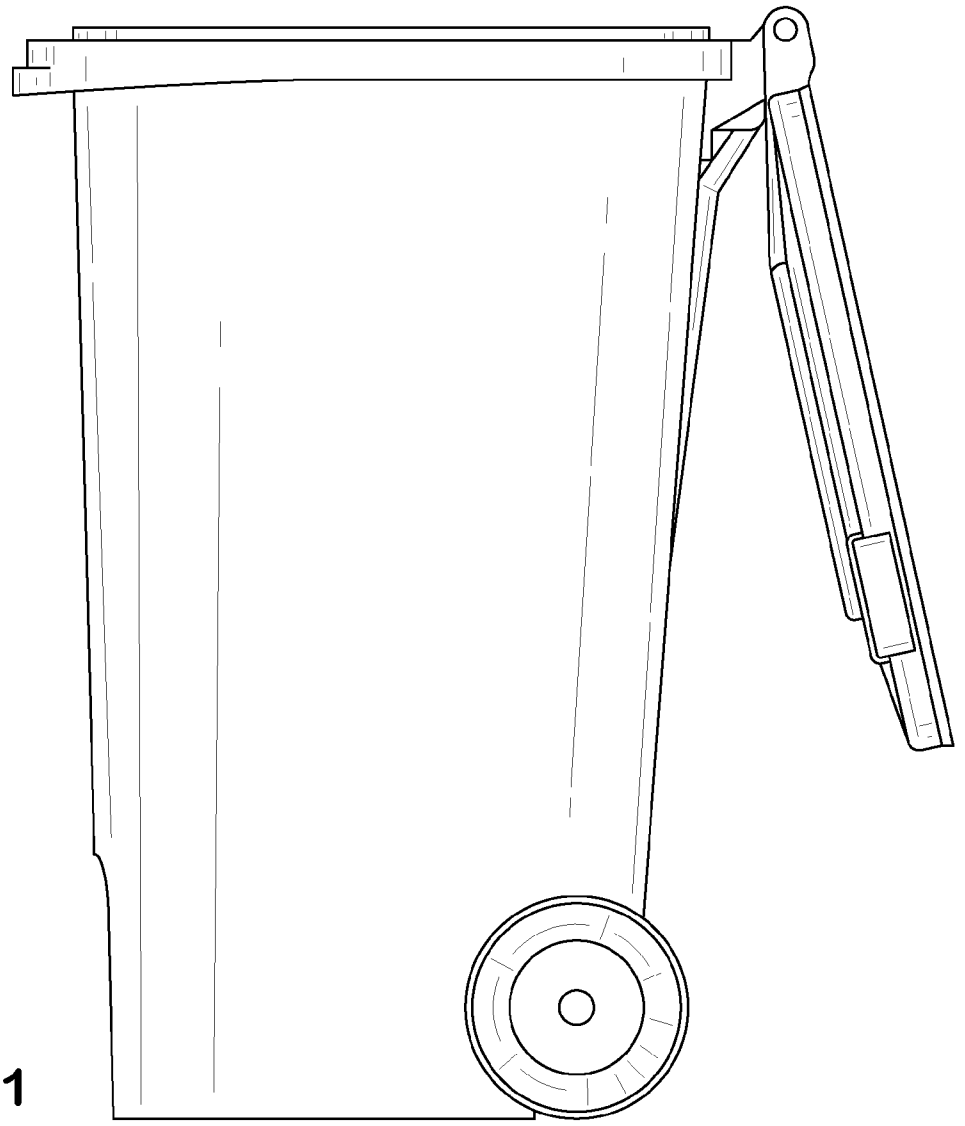

Fig. 11